# CITY OF DUNDEE
# CITY COUNCIL MEETING

801 N. Highway 99W, Dundee, OR 97115
City Hall Phone: (503) 538-3922 Website: www. DundeeCity.org

*The Mission of City Government is to provide essential, quality public services in support of the livability, safety and viability of the Dundee community.*

DECEMBER 6, 2022 7:00 PM.

1. Open Regular City Council Meeting

2. Amendments to the Agenda, if any

3. Public Hearings:
   - 3.1 CPA/ZC 22-16, Harper Houf Peterson Righellis, Inc. (Newberg School District) – Deliberation only (continued from November 15, 2022) — Pages 3-301
   - 3.2 Ordinance No. 379-2022, Approving a Comprehensive Plan Amendment and Zone Change at the corner of SE Edwards and SE 8th Street — Pages 6-67
   - 3.3 AP 22-22 (CU-STR 22-17) Bridges
     - 3.3.1 Staff Report — Pages 302-362
     - 3.3.2 Public Comment Submitted by B. Weil 11.28.2022 — Pages 363
     - 3.3.3 Public Comment Submitted by E. Sundeen 11.28.2022 — Pages 364-371

4. Public Comment: Each speaker will be allowed up to 3 minutes to speak after being recognized by the Mayor. Councilors will generally not respond to comments except to ask clarifying questions. Council may direct concerns raised by the speaker to the City Administrator or place the issue of concern on the agenda for Council discussion.

5. Consent Agenda: The following items are considered to be routine and will be enacted by one motion. There will be no separate discussion of these items unless a Council member (or a citizen through a Council member) so requests, in which case the item will be removed from the Consent Agenda and considered separately. If any item involves a potential conflict of interest, Council members should so note before adoption of the Consent Agenda.

   - 5.1 City Council Minutes, November 15, 2022 — Pages 372
   - 5.2 2023 Calendar — Pages 373
   - 5.3 OLCC Application – Rose & Arrow, LLC — Pages 374-379
   - 5.4 Tourism Committee Appointments — Pages 380

   *Action Required: Motion to Accept the Consent Agenda*

6. Old Business:
   - 6.1 Approval of ODOT updated Bypass Loan — Pages 381-395
     *Action Requested*

7. New Business:
   None

8. Council Concerns & Committee Reports

9. Mayor's Report

10. City Administrator Report

11. Public Comment: Each speaker will be allowed up to 5 minutes to speak after being recognized by the Mayor. Councilors will generally not respond to comments except to ask clarifying questions.

12. Adjourn

**********

Pending Business:

1. Public Works
   - 1.2 Water Management and Conservation Plan Update
   - 1.3 CIPP Improvement-First Year Completed/More in 2023

2. Planning/Land Use
   - 2.1 Dundee Riverside District Code Amendment
   - 2.2 Exterior Lighting – Code Update/Street Light Standards
   - 2.3 Code Amendments – Land Use Procedures
   - 2.4 Pending Type II or Type III Land Use Applications: (none)
   - 2.5 Sander Estate Park Developer Agreement

3. City Council
   - 3.1 Update SDC Methodologies
   - 3.2 Riparian Protection Regulation
   - 3.3 Storm Drain Master Plan Update

4. Parks & Trails
   - 4.1 WWTP Nature Park
   - 4.2 Riverside District Neighborhood Parks
   - 4.3 2022 State Parks Grant Application

5. Next Available Ordinance & Resolution No's.
   - 5.1 Ordinance No. 580-2022
   - 5.2 Resolution No. 2022-19

The meeting location is accessible to persons with disabilities. A request for an interpreter for the hearing impaired, or for other accommodations for persons with disabilities, should be made at least 48 hours in advance of the meeting to the Administrative Assistant at City Hall (503) 538-3922.

# City of Dundee
# City Council Staff Report
# CPA 22-16 & ZC 22-16
# Dundee Elementary School - Southeast Corner SE Edwards Drive/SE 8th Street
# Comprehensive Plan Text and Zoning Map Amendments

| | |
|---|---|
| **Request:** The proposal would amend the Comprehensive Plan text and Riverside District Master Plan, and change the zoning on 15.48 acres from A (Agriculture) to P (Public). | |
| **Hearing Date** | December 6, 2022 |
| **Applicant/Owner** | Harper Houf Peterson Righellis, Inc. Attn: Brad Kilby / Newberg Public Schools |
| **Location** | Southeast Corner SE Edwards Drive/SE 8th Street |
| **Tax Lot** | 3336-00100 |
| **Zoning** | A (Agriculture) |
| **Applicable Criteria** | Dundee Municipal Code Sections 17.405.030 |

## Location Map

## Comments Received:

Public notice of the project was published in the Newberg Graphic, mailed to property owners within 100 feet of the project location, and the site was posted. In addition, affected city departments and outside agencies were mailed a request for comment on the proposal. Comments were received from agencies as listed below and included in Attachment 1.

- Building Department: Reviewed, no conflict.
- Fire Department: Reviewed, no conflict.
- ODOT Rail: no comments or concerns with the proposed zoning change
- US Army Corps of Engineers: If you are submitting an application for a construction permit, you can find the permit application (Joint Permit Application) and read about the process at the website below.
- Ziply Fiber: No conflict
- USPS: Reviewed, no conflict.
- City Engineer: I do not have a conflict with the zone change but I do not agree with the traffic study's determination that no significant impact will result from the placement of the school at this location. Further evaluation of the driveways and loading/unloading zones will be needed during the design review for the school. Local streets in this area will be impacted and traffic flow needs to be further evaluated. The City has already received comments from concerned residents in this area.

One public comment was received at the public hearing on November 15, 2022. This comment is included as Attachment 1.

## Executive Summary

The location for the proposed amendments is property at the southeast corner of SE Edwards Drive and SE 8th Street. Attachment 2 is an aerial view of the proposed property.

The request is to amend the Comprehensive Plan text and text in the Riverside Master Plan and change the zoning designation for 15.48 acres from A (Agriculture) to P (Public) for a new Dundee Elementary School. Attachment 3 is a map depicting the current zoning designation. The applicant had also identified changing the Comprehensive Plan Map designation for the subject property from A (Agriculture) to P (Public). Discussions with staff clarified that the existing Comprehensive Plan designation was (RD) Riverfront District and that designation would not be supported to be changed by staff.

Newberg Public Schools prepared a School Facility Plan in 2019 that identified constructing a new elementary school in Dundee to replace the existing elementary located on SW 5th Street. After the preparation of the School Facility Plan Newberg Public Schools prepared a bond that went before the voters in November 2020.

Newberg Public Schools evaluated options for a site for the new elementary school and ultimately purchased the 15.48 acres located at the southeast corner of SE Edwards Drive and SE 8th Street in 2021.

City staff and representatives from Newberg Public Schools met in a pre-application meeting on July 14, 2021, to discuss the steps necessary to site a new elementary school within the Riverside District Master Plan area. The first step was to modify the Comprehensive Plan and Zoning designation for the property. If approved the next step would be a Site Development Review process, followed by submittal and issuance of public improvements permits. Next would be submittal of plans for Building Plan Review, then followed by construction of public improvements and the new elementary school.

There are two aspects to amending the Comprehensive Plan. First is amending text within the Comprehensive Plan to recognize the location of the new elementary school. The second is amendments to text and graphics in the Riverside District Master Plan which are part of the Comprehensive Plan. The current adopted version of the Riverside District Master Plan did not specifically contemplate a new elementary school in the Riverside District but did acknowledge that a school is a possibility in the Riverside District. The proposed changes update the Riverside District Master Plan to make it clear that a new elementary school is anticipated within the Riverside

District. The changes to the Comprehensive Plan are included in Attachment 4 as track changes to clearly identify the proposed changes. Exhibit "A" to Ordinance No. 579-2022 is a clean version of the proposed changes.

The second aspect of the applicant's request is to change the current zoning from A (Agriculture) to P (Public) to allow for the new Dundee Elementary School. Attachment 3 shows the current zoning and Exhibit "B" to the Ordinance identifies the proposed zoning designation.

The proposed changes by the applicant reduce the potential housing capacity in the Riverside District by 64 units. The Comprehensive Plan Amendments update the necessary tables in the Riverside District Master Plan.

At the October 19, 2022, public hearing the Planning Commission heard the presentation of the staff report and public testimony from the applicant and applicant's representatives, deliberated and passed a motion to recommend City Council approve the application. A copy of the Planning Commission Order (Attachment 5) is included in this report.

The applicant's application packet is included as Attachment 6.

At the November 15, 2022 public hearing City Council directed staff to return with revisions to the proposal based on the public comment received. The revisions would address clarification of the Green Seam trail and identification of park land in Subarea A of the Riverside Master Plan to replace park land in Subarea C that would be displaced by the proposed new Dundee Elementary School. Exhibit "C" has the findings to justify the City Council directed modification under Goal 8 Recreation Needs of the Statewide Planning Goals, and the Recreation and Willamette River Greenway goal of the Comprehensive Plan.

## Staff Recommendation

At the December 6, 2022 hearing, the City Council should:

1. Consider the Planning Commission Order of Recommendation and public testimony.
2. Deliberate and make findings. Tentative findings are shown in Exhibit "C" of the attached Ordinance No. 579-2022.
3. Either (A) Direct staff to return with a final ordinance for adoption at a future meeting, or (B) unanimously vote to adopt Ordinance No. 579-2022.

## Attachments

Ordinance 579-2022

Exhibit "A": Proposed Comprehensive Plan Text Amendment
Exhibit "B": Proposed Zoning Map Amendment
Exhibit "C": Findings

1. Agency Comments
2. Aerial Map
3. Current Zoning Map
4. Comprehensive Plan and Riverside Master Plan Track Changes
5. Signed Planning Commission Order of Recommendation (with exhibits by reference)
6. Applicant's Materials

# CITY OF DUNDEE
# ORDINANCE NO. 579-2022

***An Ordinance approving a Comprehensive Plan Amendment (text and Riverside Master Plan), and a Zone Change from A (Agricultural) to P (Public) for property located at the southeastern corner of SE Edwards Drive and SE 8th Street, Tax Lot 3336-00100***

**WHEREAS,** the Newberg Public Schools, submitted an application to amend the Dundee Comprehensive Plan and Riverside Master Plan, and change the zoning of tax lot 3336-00100 from Agriculture (A) to Public (P).

**WHEREAS,** the proposed change decreases the agricultural zoned land held in a holding zone and reduces residential development capacity in the Riverside Master Plan by 64 units, it increases the amount of Public (P) zoned land to accommodate an elementary school.

**WHEREAS,** after proper notice, the Planning Commission held a public hearing to consider the proposed Comprehensive Plan amendment, and zone change, and adopted an Order of Recommendation to the City Council on October 19, 2022.

**WHEREAS,** after proper notice, the Dundee City Council held a hearing on November 15, 2022 to consider the proposed Comprehensive Plan and zone change and continued the hearing to December 6, 2022 to address park and trail requirements.

**WHEREAS,** the Dundee City Council continued the hearing on December 6, 2022 to consider the proposed Comprehensive Plan and zone change. The Council finds that the proposal meets the applicable criteria for the Comprehensive Plan Amendment and Zone Change but not for the Comprehensive Plan Map Amendment.

**NOW, THEREFORE, THE CITY COUNCIL OF THE CITY OF DUNDEE HEREBY ORDAINS AS FOLLOWS:**

1. The Dundee Comprehensive Plan text and Riverside Master Plan are hereby amended as shown in Exhibit “A”. Exhibit “A” is hereby adopted and by this reference incorporated.

2. The Dundee Zoning Map is hereby amended as shown in Exhibit “B”. Exhibit “B” is hereby adopted and by this reference incorporated.

3. The Dundee Comprehensive Plan Map Amendment is denied.

4. The attached findings in Exhibit “C” in support of the amendments in Exhibit “A” and Exhibit “B” and denial of the Comprehensive Plan Map Amendment are hereby adopted and by this reference incorporated.

**ADOPTED by the Dundee City Council this 6th day of December, 2022.** The effective date of this Ordinance is 30 days after the hearing: January 5, 2023.

**Approved:**

_____

David Russ, *Mayor*

**Attest:**

_____

Steve Dahl, *City Administrator*

ATTACHMENTS:

Exhibit "A": Dundee Comprehensive Plan and Riverside Master Plan Amendments
Exhibit "B": Dundee Zoning Map Amendment
Exhibit "C": Findings

Exhibit "A"
Ordinance No. 579-2022

# Riverside District Master Plan

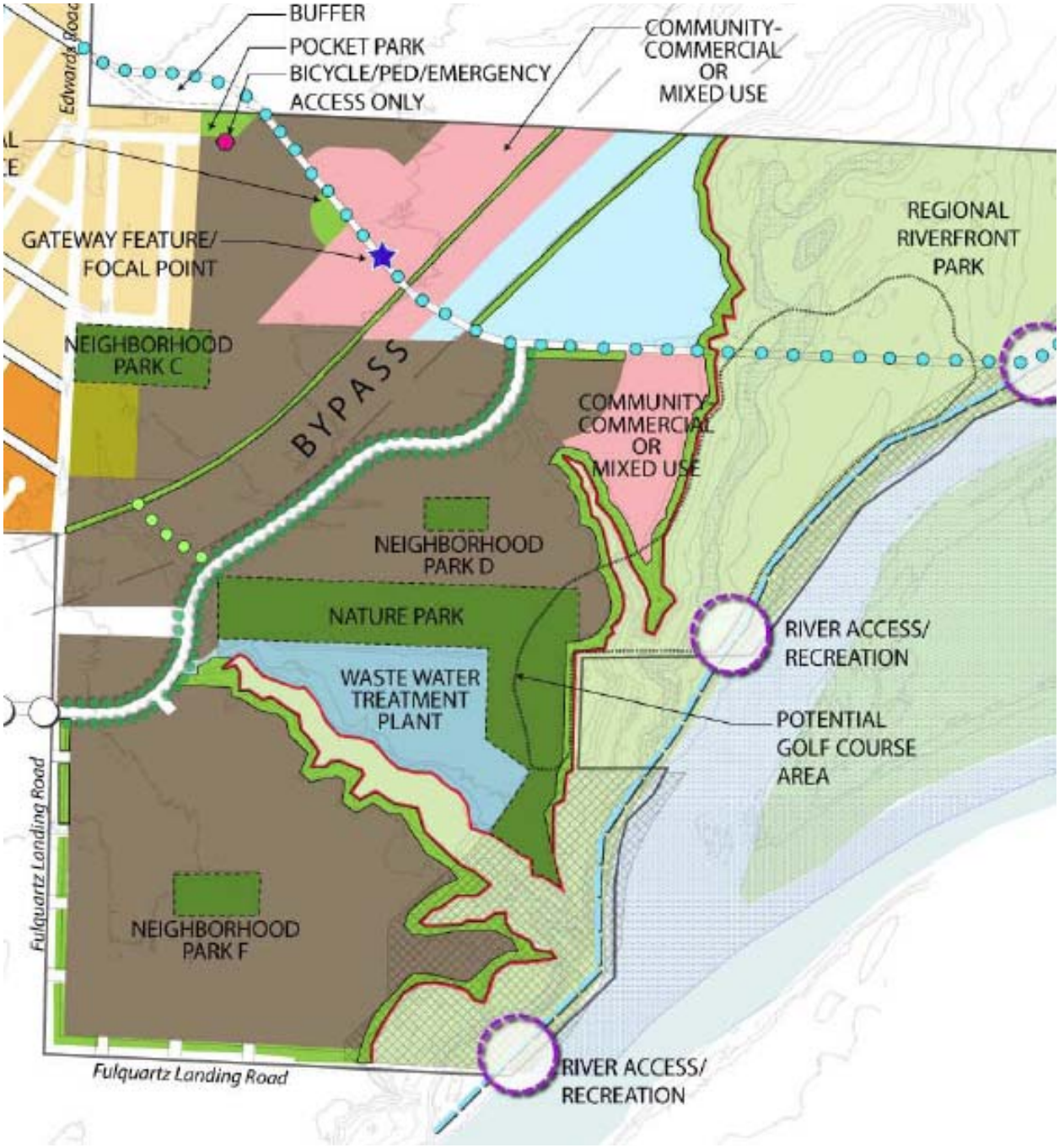


## Prepared for the City of Dundee

June 2011

Amended December 2022

# Riverside District Master Plan

**Prepared for the City of Dundee**

**By Angelo Planning Group**

**In Association with**

**Cogan Owens Cogan, LLC**

**GreenWorks**

**Johnson Reid, LLC**

**Kittelson & Associates, Inc.**

**June 2011**

This project is partially funded by a grant from the Transportation and Growth Management Program ("TGM"), a joint program of the Oregon Department of Land Conservation and Development (DLCD) and the Oregon Department of Transportation (ODOT). This is financed in part by federal Safe, Accountable, Flexible, Efficient Transportation Equity Act: A Legacy for Users (SAFETY-LU), local government and State of Oregon funds.

The contents of this document do not necessarily reflect the views or policies of the State of Oregon.

## Acknowledgements

**City of Dundee City Council**
Ted Crawford, Mayor
Doug Pugsley, President
Jeannette Adlong
Ivon Miller
Jennifer Munson
Storr Nelson
J. Randy Reddell

**City of Dundee Planning Commission**
Jerry Fiedler, Chairman
David Hinson, Vice-Chairman
Ron Mock
Nick Wymore
Gary Manning
Larry Lietz

**Technical Advisory Committee (TAC)**
Rob Daykin, City of Dundee
Luke Pelz, City of Dundee
Naomi Zwerdling, ODOT
Cliff Houck, Oregon Parks and Recreation Dept
Don Clements, Chehalem Parks and Recreation District
Ken Friday, Yamhill County
Steve Oulman, DLCD
Dan Fricke, ODOT Region 2
Terry Cole, ODOT Region 2
Chris Bailey, ODOT Region 2
Angela Kargel, ODOT Region 2
Dorothy Upton, ODOT
Roger Gutierrez/Sheila Lyons, ODOT

**Citizen Advisory Committee (CAC)**
Susan Baird
Jessica Cain
Paul de Lancellotti
Tom and Kay Edwards
Jerry Fiedler
Rod Grinberg
Dixie Hancock
Stuart Lindquist
Storr Nelson
Doug Pugsley
Dian Maybury
Truman Stone
Mart Storm

## Table of Contents

Executive Summary ..... 1
I. Background ..... 3
II. The Plan ..... 5
A. Plan and Zoning Designations ..... 12
B. Riverside District Policies ..... 16
Land Use ..... 16
Transportation ..... 18
Water, Wastewater and Stormwater ..... 19
Parks, Open Space and Trails ..... 19
C. Implementation ..... 20
Land Use and Development ..... 20
Transportation Facilities and Improvements ..... 21
III. Future Actions ..... 27
Other Implementation and Phasing Issues and Actions ..... 27
Appendices ..... 30

**Appendix A – Comprehensive Plan Amendments – New Riverside District Chapter**
**Appendix B – Supporting Documents (Adopted by Reference)**
Appendix B1 – Project Goals, Objectives and Evaluation Criteria
Appendix B2 – Meeting Summaries
Appendix B3 – Public Involvement Summary
Appendix B4 – Dundee Identity Framework Plan
Appendix B5 – Background Conditions Report
Appendix B6 – Charrette Report
Appendix B7 – Land Use Alternatives Report
Appendix B8 – Transportation Analysis
Appendix B9 – Cost Estimates, Funding Strategies and Responsibilities

**Figures**
Figure 1 – Riverside District Land Use Plan
Figure 2 – Riverside District Subareas
Figure 3 – Riverside District Transportation Framework Plan
Figure 4 – Standard Cross Sections for Local Streets
Figure 5 – Standard Cross Sections for Parkway Collector and Collector Streets
Figure 6 – Riverside District Natural Resources and Riparian Areas

**Tables**
Table 1 – Riverside District Land Uses
Table 2 – Target Dwelling Units and Non-Residential Floor Area by Subarea and Land Use
Table 3 – Riverside District Land Uses by Subarea
Table 4 – Trip Generation Rates
Table 5 – Estimated Riverside District Trip Generation – Weekday PM Peak Hour
Table 6 – Estimated Trip Distribution by Subarea
Table 7 – Riverside District Action Chart

# Executive Summary

The Riverside District Master Plan area is comprised of about 360 acres in the City of Dundee, Oregon. The planning area fronts the Willamette River for over 6,000 linear feet across from Ash Island in the Chehalem Valley area of Yamhill County. The planning area is primarily undeveloped with the exception of a few single family dwellings and the wastewater treatment plant. The planning area encompasses the majority of the city's buildable land inventory. The City of Dundee initiated the master planning process in 2010 to provide a more detailed land use and transportation plan to guide coordinated development of this special area. The project was funded by a grant from the Oregon Transportation and Growth Management (TGM) Program consistent with Statewide Planning Goals that require cities to plan for future growth, including providing adequate land and facilities to meet long term (20–year) growth projections.

The Riverside District planning area features a number of unique assets and opportunities:

- A relatively small number of property owners and large parcels of undeveloped land, making master planning easier;
- A prime location along the Willamette River, with outstanding views of the river and surrounding areas in addition to access to water-based recreation;
- Natural resources that provide intrinsic natural values as well as amenities to future residents and visitors; and
- Community support for a creative, sustainable master plan and planning process.

The adopted Riverside District Master Plan reflects substantial input from the public involvement process, including opportunities for input from the major property owners. The Master Plan will guide future development of the planning area with a coordinated mix of residential, commercial, tourism and open space and recreational uses that are cohesive and connected with Dundee's larger community vision. The adopted Master Plan provides more detail regarding future development than can typically be provided through basic comprehensive plan designations and zoning. The Dundee Comprehensive Plan includes a new Riverside District plan designation and policies to provide a framework to implement the Riverside District Master Plan. Text of the Riverside District Comprehensive Plan Chapter is included in Appendix A of this Master Plan.

Adoption of the Master Plan concludes the following steps in a multi-step process required prior to development in the Riverside District:

1. Amendment of the Dundee Comprehensive Plan text to include a new chapter and policies relating to the Riverside District.
2. Amendment of the Comprehensive Plan Map to change existing designations for the Master Plan area from Agricultural, Residential, Commercial, Light Industrial and Public to the Riverside Plan District.
3. Adoption of the Riverside District Master Plan by reference as a support document to the Dundee Comprehensive Plan.

The City had initially hoped to amend the Development Code and the Zoning Map to apply the new Riverside District Zone (with seven subareas) to implement the master plan. However, following consideration of a March 2011 memo from the City's consulting engineer (Murray, Smith & Associates, Inc.) that documented the severity of the constraints on the existing water supply, the City decided to defer adoption of the Riverside District Zone and rezoning land in the Riverside District until more detailed infrastructure and financial plans are prepared to support the master plan, with a specific emphasis on water supply improvements.

The City will retain existing zoning that applies within the new Riverside District Plan designation for an interim period. Existing zoning is considered consistent with the Riverside District plan designation because existing zones allow less intensive, lower density development than anticipated in the Riverside District Master Plan. Uses and development allowed under existing zoning regulations will be allowed in this interim period, consistent with the provisions of the Dundee Development Code, statewide administrative rules and statutes, policies in the Riverside District Comprehensive Plan chapter, and any conditions of prior zone change approvals.

Additional land use approvals will be required prior to development to the scale and density envisioned in this master plan, including but not limited to:

- Development Code text amendment to adopt new Riverside District Zone;
- Zone change(s) to apply the new Riverside District Zone;
- Detailed master plans (by subarea) to establish local street network, identify specific park sites and trail connections, lay out blocks, refine mix of land uses and set mix of housing types and lot sizes, establish phasing schedule, etc.
- Subdivision(s) to divide land in accordance with detailed master plans; dedicate local streets parks and trail and utility easements; install public and private improvements, etc.
- Potential site design review for multi-family and non-residential buildings, unless clear and objective design standards are adopted as part of the detailed master plan for a particular subarea.
- Traffic analysis will be required as part of a zone change or site design review to document that the proposed phase of development is consistent with the overall trip thresholds outlined in the Master Plan.

This Master Plan document is divided into four sections:

I. **Background** – This section summarizes background information for the planning area, including project goals, public involvement and land use alternatives.

II. **Plan** – This section includes the key maps, figures and tables, including the Comprehensive Plan Map designation, the Master Plan (with land uses), the Street and Trail Plan, the Riparian Corridors, and typical street and trail cross-sections.

    Section II also includes the additional Master Plan policies that will be used by staff and the Planning Commission to review future development proposals (refinement plans and subdivisions) after the Riverside District Zone is implemented.

III. **Future Actions** – This section includes an Action Chart that identifies the issues that are left undecided, tasks left to do, or analysis that is still needed and recommended to be pursued after the plan is adopted. The Action Chart identifies action items, responsible party, and tentative time frame.

IV. **Appendices**
    - Appendix A – Adopted Riverside District Comprehensive Plan Chapter
    - Appendix B1 through B9 – Supporting Documents, including meeting summaries, land use alternatives report, charrette report, transportation analysis, and other background documents.

# I. Background

The Master Plan area was annexed to the City of Dundee in 1969. When the Dundee Comprehensive Plan was adopted in 1977, the planning area was designated for Agricultural use and placed in an Agricultural holding zone with policies stating that the land would be rezoned incrementally for residential use when need for the land was shown. In 2008, Dundee City Council approved a plan amendment and zone change affecting about 54 acres in the northerly portion of the planning area. However, the Council wanted to avoid incremental zoning of the larger area as called for in the Comprehensive Plan. As a condition of the plan amendment/zone change approval, the City Council required submittal and approval of a master plan prior to development of the subject property. During the public hearing process on the zone change, the City Council expressed interest in using the master planning process to ensure integrated planning and development of the Riverside Farms, LLC property and adjacent developable properties.

As described in the Executive Summary, the City initiated the master planning process in 2010 after receiving a grant from Oregon's Transportation and Growth Management Program. The master planning project was informed by an extensive community involvement process that included guidance from citizens and technical advisory committees, participation from property owners, public meetings, use of a project Web site (www.dundeeriverfront.net) and other means to inform community members about the process and public hearings associated with adoption of the plan. A key step in the planning process was a design charrette to identify land use and transportation plan alternatives for the Riverside District. The charrette, held October 10-14, 2010, resulted in the identification of a preferred land use and transportation concept for the planning area. A market study and a transportation analysis of the alternatives informed the selection of the preferred alternative. A report describing the charrette process and results is available on the project Web site and in Appendix B6.

A set of Master Plan goals and objectives was developed by the project management team and project advisory committees. These goals and objectives served as the criteria used to evaluate land use and transportation alternatives that were developed during the design charrette. The plan goals are presented below.

1. Conduct a fair and transparent master planning process.
2. Build on, enhance and communicate the unique characteristics of the planning area for the citizens of Dundee.
3. Allow for a mix of future land uses that meets the City's economic, housing and other needs.
4. Create an integrated land use and transportation system that is well-connected internally and to other parts of the city, incorporates a full range of ways to travel and is safe, efficient and sustainable.
5. Incorporate natural features and resources into the Master Plan in a way that protects key resources and enhances the value of the area for future residents.
6. Develop strategies for successful, efficient and cost-effective implementation of the Master Plan.
7. Address current and future public facility needs.

The Preferred Land Use and Transportation Alternative developed through this process forms the basis for the content of this Master Plan. The Master Plan elements are described in more detail in Section II. Existing conditions in the planning area have been presented in earlier reports and can best be summarized in terms of the general context of the planning area, existing zoning and land use, and natural resources and environmental conditions.

- **Planning area context**. The planning area is approximately 360 acres in size, located southeast of the developed portions of Dundee. It is almost as large as the rest of the city. It is approximately one-quarter mile east of OR 99W and bisected by the corridor for the planned Newberg Dundee Bypass. Overcrossings of the Bypass in the vicinity of 8th Street and Fulquartz Landing/Parks Street will provide connections between the developed area of Dundee and the riverfront area. However, the Bypass divides the planning area into several subareas and provides a barrier to greater connectivity.
- **Existing land use and zoning**. Most land in the planning area currently is in residential or agricultural use or is vacant. There are a total of 24 separate parcels in the area, ranging from 0.6 to 91 acres in size, with a total of nine dwellings. The city's municipal wastewater treatment facility is located roughly in the center of the planning area and includes a series of settling ponds and lagoons. A majority of the land in the planning area is currently zoned for agricultural use. In 2008, the city rezoned about 54 acres in the northern portion of the planning area for a combination of residential, commercial and light industrial uses.
- **Urban growth boundary and city limits**. Virtually the entire study area is included within the Dundee city limits. However, the Urban Growth Boundary (UGB) generally parallels the 150-foot elevation and about 97 acres abutting the Willamette River are located within the city limits but outside of the UGB. The area outside of the UGB is currently zoned for Exclusive Farm Use (EFU) on the Dundee zoning map, and some of the area is also within Greenway and Floodplain Overlays. Under Oregon's planning system, it is unusual to have land within the city limits but outside of the UGB.
- **Natural resources and environmental conditions**. The planning area features a variety of natural resources that provide value for Dundee residents and natural systems, while also representing restrictions to future use and development of some portions of the planning area. These include areas affected by flooding or the risk of floods, waterways such as streams and wetlands, steep slopes and unstable soil conditions.
  - Water Resources and Riparian Areas. The Willamette River is the dominant water feature adjacent to the planning area. Two main drainage swales extend from the Willamette River to the northwest into the Master Plan area. These two riparian areas are adjacent to current agricultural land uses and the wastewater treatment plant and have intermittent tree canopy.
  - Floodplains. The 100-year floodplain adjacent to the Willamette River is the principal water hazard related to flooding for the City of Dundee. The City's Development Ordinance regulates development within the floodplain and floodway.
  - Steep Slopes. Steep slopes often represent constraints to development, given the cost of addressing the hazards related to erosion and other soil movement and the resulting impacts on properties or resources below them. Much of the area is very flat, with slopes of less than 5%. However, there are sloped areas to the east of a ridge that is located at an elevation of about 150 feet. There also are sloped areas directly adjacent to the river and in the two drainage areas that extend northwest from the river.

A significant amount of information related to conditions within and related to the planning area is found in a separate Background Conditions report prepared for this project (Appendix B5) and available on the project Web site.

# II. The Plan

This section of the Master Plan provides the maps and policies to implement the conceptual land use and transportation framework.

Rather than apply and modify existing zoning regulations for the Master Plan, a new Riverside District Zone has been proposed to tailor specific land uses, densities, and development and design standards to the unique characteristics of this area. The maps and policies in this section and the provisions of the new Riverside District Zone, when adopted, will be used by staff and the Planning Commission to evaluate future land use proposals such as detailed master plans, subdivisions and site development review applications within the Riverside District boundary. The zoning regulations will be tailored to seven distinct subareas (A through G). As described in Section I, existing zoning will be retained in the interim period before the Riverside District Zone is refined and adopted, and zone changes approved based on the criteria in Chapter 3.102 of the Dundee Code.

The following figures are adopted as part of the Riverside Master Plan:

Figure 1 – Riverside District Land Use Plan

Figure 2 – Riverside District Subareas

Figure 3 – Riverside District Transportation Framework Plan

Figure 4 – Standard Cross Sections for Local Streets

Figure 5 – Standard Cross Sections for Parkway Collector and Collector Streets

Figure 6 – Riverside District Natural Resources and Riparian Areas.

Through the Riverside District planning process, a conflict was identified between the cross-sections for Local Street I in the Dundee TSP and the Dundee Development Code. The TSP allows a 26-foot paved section while the Development Code requires a 28-foot paved section.

ODOT has made a commitment to the City of Dundee to fund an update of the city's TSP starting in 2011. Through that process, the City expects to consider options for local street cross-sections and will assure that TSP and Code provisions are consistent. After the TSP and Code are updated, future development in the Riverside District may be able to take advantage of a wider variety of local street cross-sections. At a minimum, street trees will be a required feature for all streets in the Riverside District. Residential streets will typically have landscape strips for street trees. Commercial areas may have wider streets with trees planted in tree wells.

The established cross-section for the Parkway Collector in the TSP and Development Code will be maintained to help establish the special character for the collector road east of the Bypass that provides an important link between the two Bypass overcrossings and connectivity of several Riverside District Subareas. The "parkway" design features will help to reinforce the special character of the Riverside District. If the Parkway Collector parallels the Bypass, the wider multi-purpose path would only be required on one side adjacent to the development area.

Figure 1 - Riverside District Land Uses (Amended December 2022)

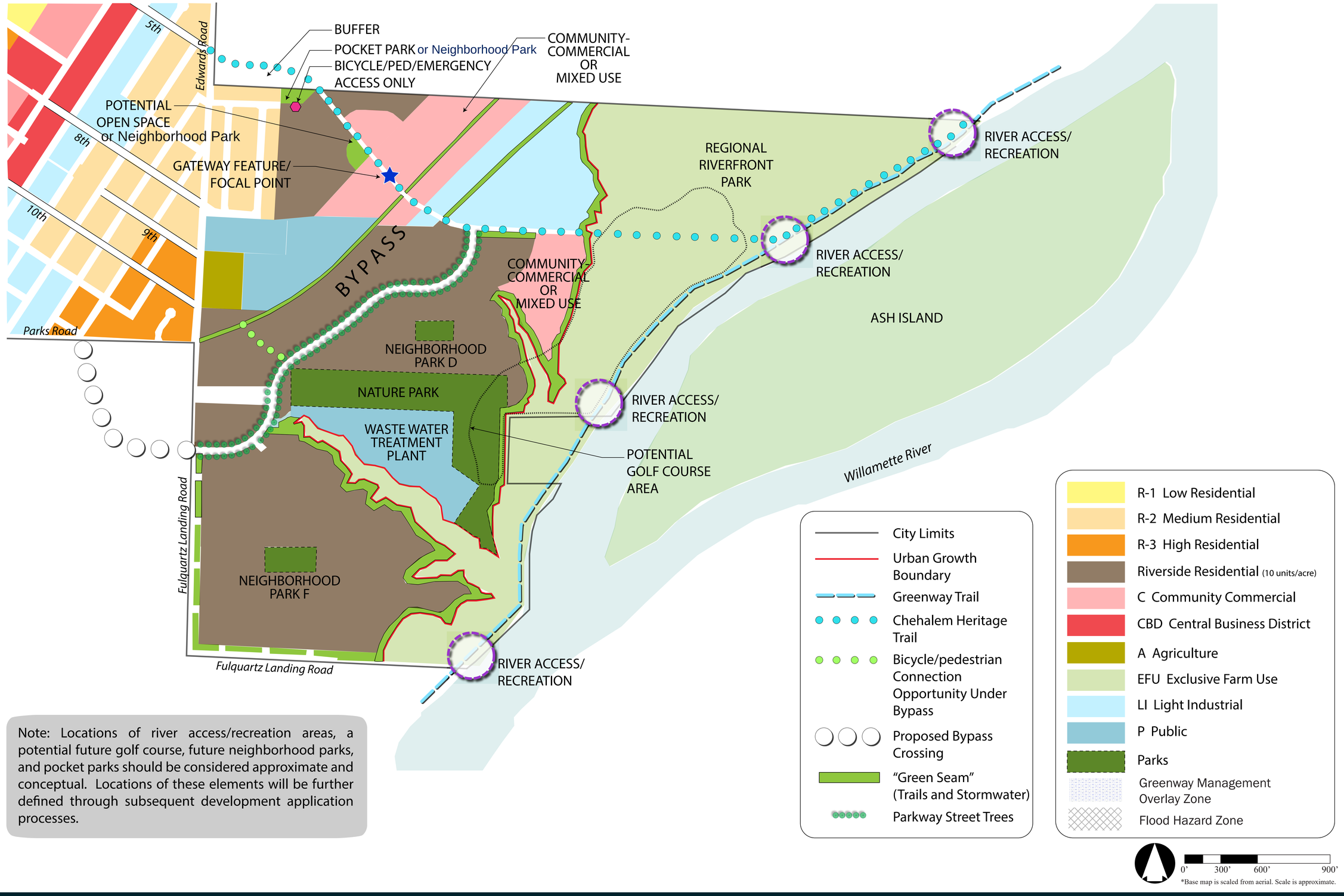


Note: Locations of river access/recreation areas, a potential future golf course, future neighborhood parks, and pocket parks should be considered approximate and conceptual. Locations of these elements will be further defined through subsequent development application processes.

Figure 2 - Riverside District Subareas

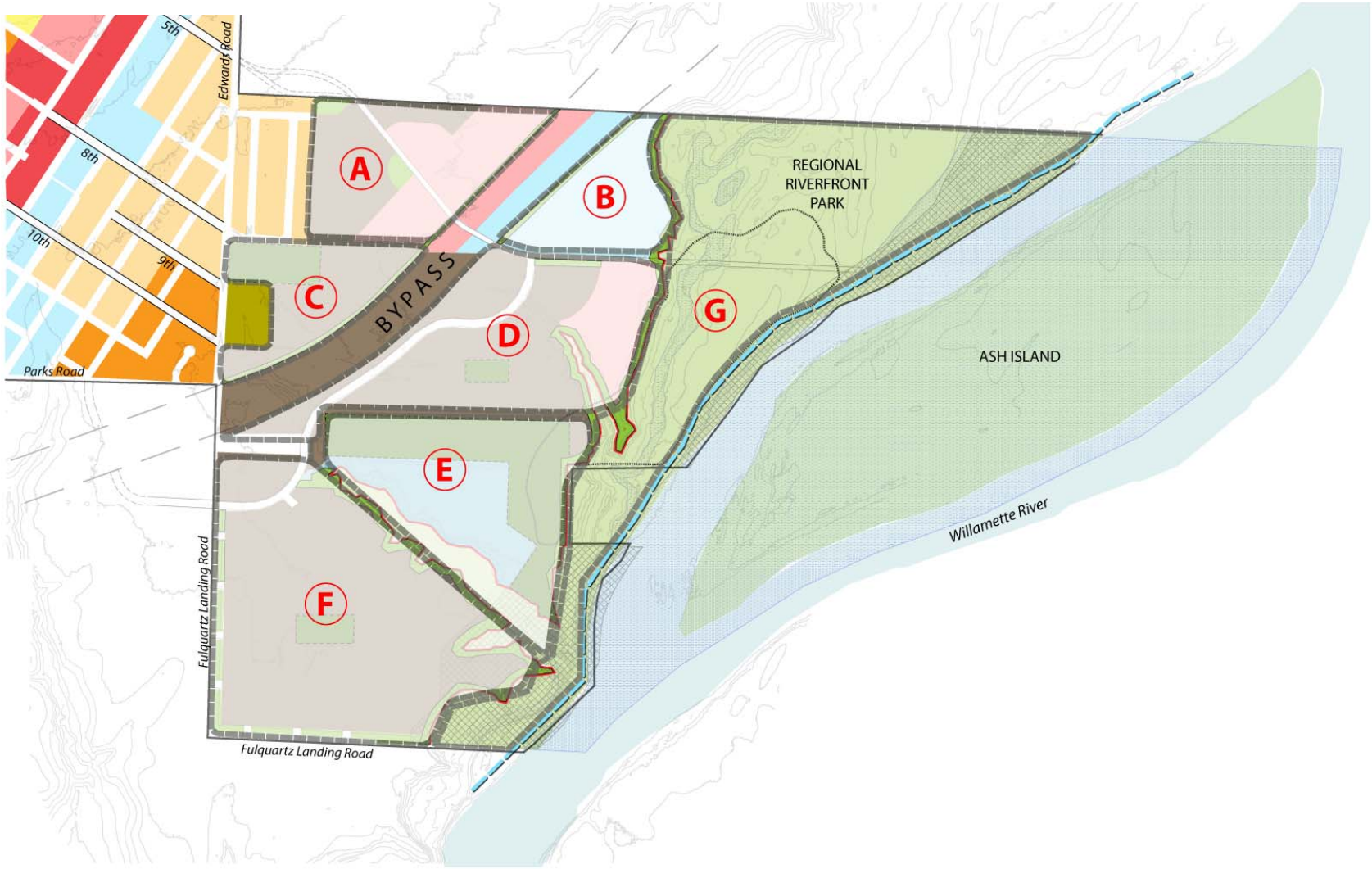


0' 300' 600' 900'
*Base map is scaled from aerial. Scale is approximate.

**Master Plan Subareas**

RIVERSIDE DISTRICT AND SUBAREAS MASTER PLAN - CITY OF DUNDEE

June 10, 2011

Figure 3 - Riverside District Transportation Framework Plan

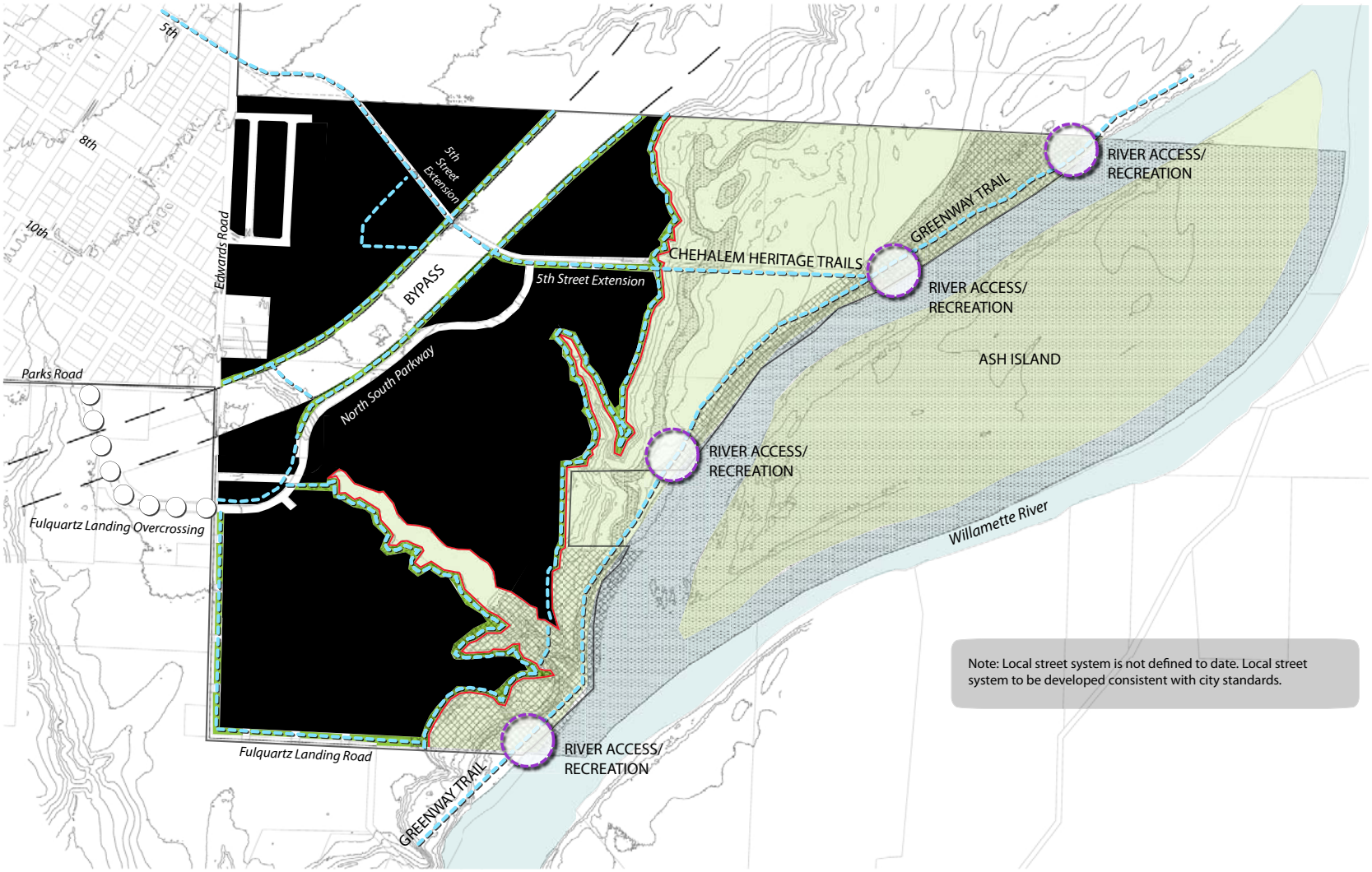


0' 300' 600' 900'

*Base map is scaled from aerial. Scale is approximate.

**Master Plan Transportation Context**

RIVERSIDE DISTRICT AND SUBAREAS MASTER PLAN - CITY OF DUNDEE

June 6, 2011

# Figure 4 - Standard Cross Sections for Local Streets

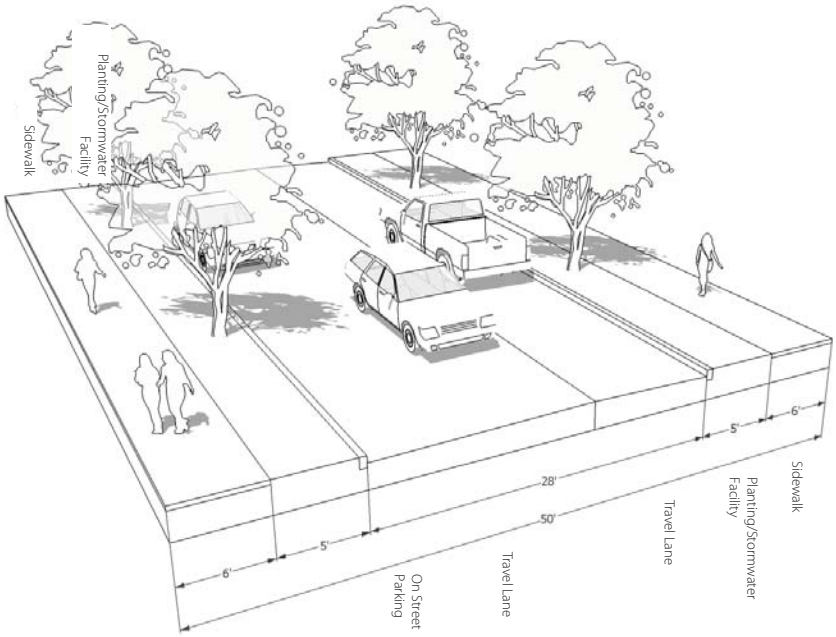


LOCAL STREET I - Two Travel Lanes with On-Street Parking on One side only

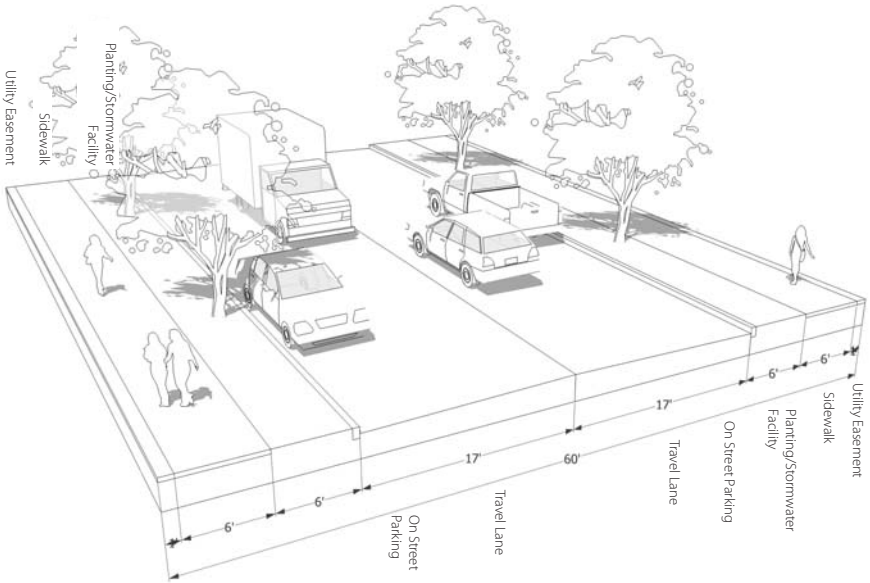


LOCAL STREET II - Two Travel Lanes with On-Street Parking on Both sides

Figure 5 - Standard Cross Sections for Parkway Collector and Collector Streets

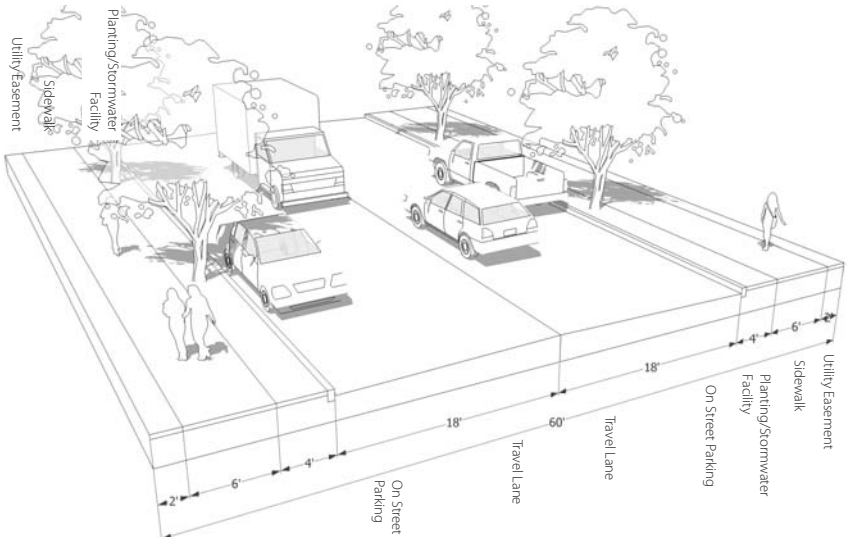


COLLECTOR - Two Travel Lanes with On-Street Parking Both Sides

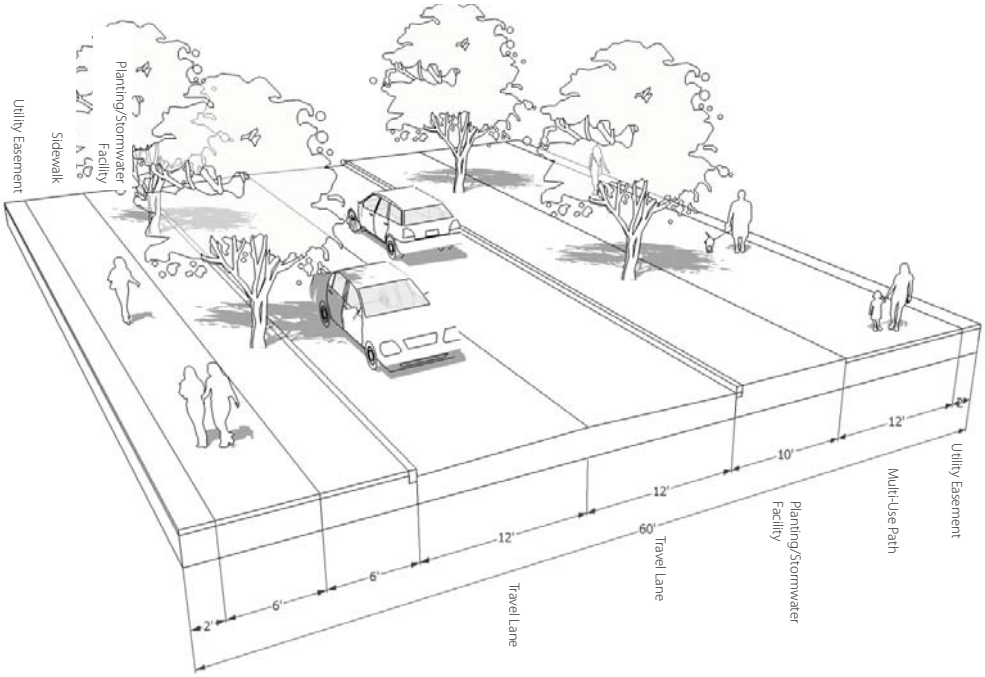


PARKWAY COLLECTOR - Two Travel Lanes with no On-Street Parking

Figure 6 - Riverside District Natural Resources and Riparian Areas

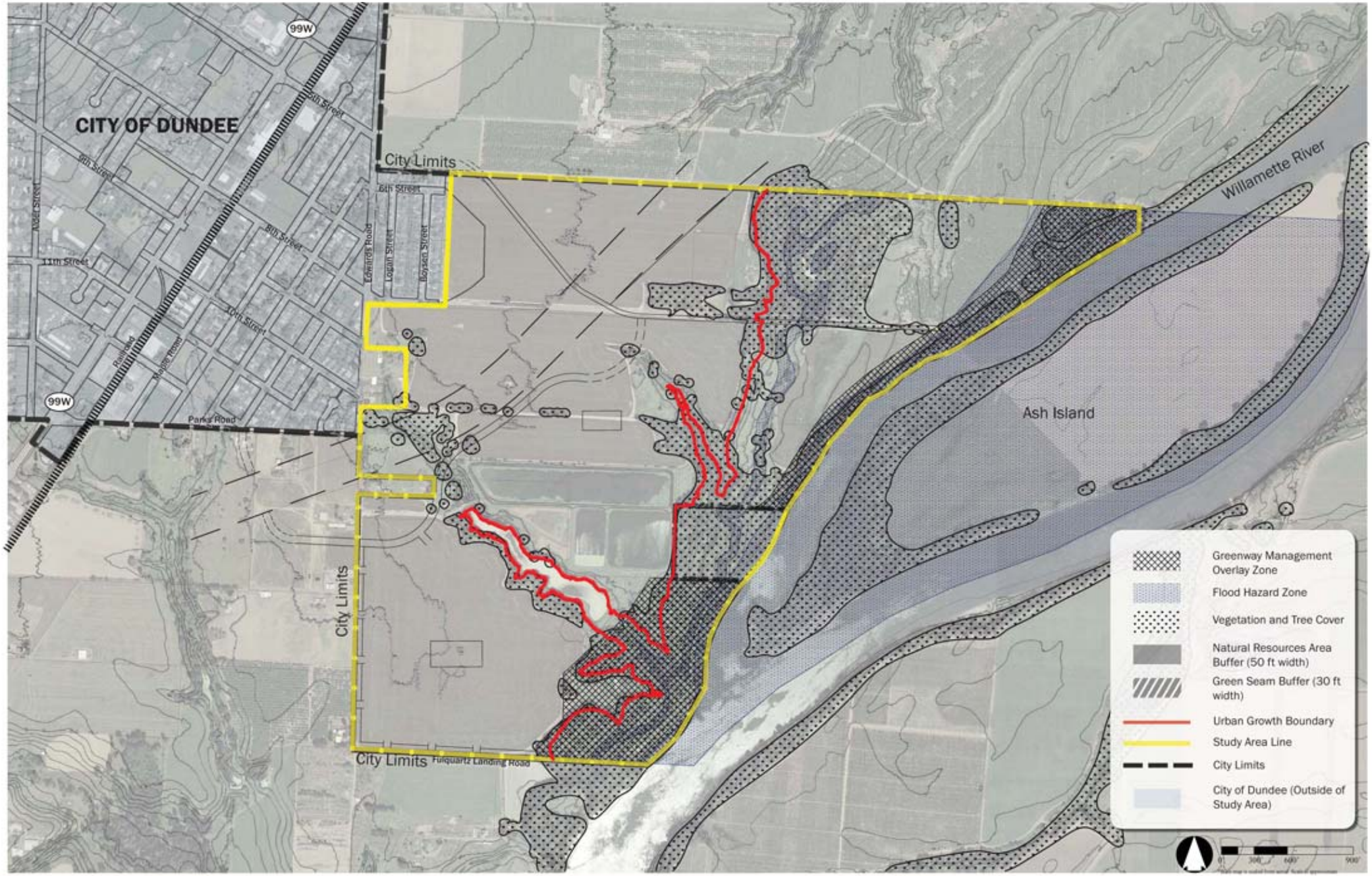


**Natural Resources and Riparian Areas - *Vegetated Buffers***

SOUTHEAST DUNDEE RIVERFRONT MASTER PLAN - CITY OF DUNDEE

June 6, 2011

## A. Plan and Zoning Designations

Figures 1 and 2 illustrate the boundaries of the new Riverside District and identify the boundaries of the seven subareas. The boundaries between the subareas were defined as follows:

- Used existing parcel boundaries between major property owners (Edwards, Lindquist and City of Dundee);
- Used the bypass corridor to identify boundaries of subareas to the west and east of the bypass; and
- Generally followed the 150-foot elevation line to define Subarea G (outside of the UGB). The only exception is provided for the two riparian corridors which are currently outside of the UGB, but will instead be protected under the Riverside District plan policies and future zoning.

Figure 1 provides the basis for the Comprehensive Plan Map amendments.

Primary land uses have been planned by subarea within the Riverside District Master Plan area. The allocation of land uses by subarea (including target number of housing units and maximum non-residential floor area) is shown in Tables 1 and 2 and provided the basis for the Master Plan transportation analysis shown in Table 5.

The allocation of housing units and non-residential floor area to Riverside District Subareas was based on the following assumptions:

- The number of housing units is consistent with population and housing projections assumed for the Riverside District in other reports and plans, including the 1999 Buildable Lands Inventory and Housing Needs Analysis, Wastewater Master Plan and Transportation System Plan.
- Higher densities and levels of development in the Riverfront District will help the city implement needed water, wastewater and transportation improvements and spread those costs over a larger number of households, thereby reducing the cost burden on existing city residents. Allowing for more density and development in this area is also important to provide and pay for trails, parks and other amenities within the planning area.
- The Master Plan assumes an average residential density of about 10 units per acre, with the flexibility to average lot sizes within a single development or over a larger subarea or several subareas. By providing broad flexibility to meet changing housing needs and market demands, the Master Plan provides opportunities for a mix of housing types to meet the City's overall housing needs and support required infrastructure and amenities.
- As summarized in the 1999 Buildable Lands Inventory and Housing Needs Analysis, the actual average housing density in Dundee was 4.7 dwelling units per net acre from 1985-1998. As stated in that report, it is clear that Dundee needs to zone additional land to meet the need for more affordable housing types at increased densities – especially as Dundee takes steps to provide more local employment opportunities. To provide for more affordable housing opportunities, the Housing Needs Analysis recommended that additional land be zoned for smaller single family lot sizes, row houses, manufactured dwelling parks and multi-family housing. Therefore, the Riverside District Master Plan is consistent with the recommendations from the 1999 Housing Needs Analysis because the plan establishes a higher average density for the Riverside District and provides broad flexibility for a mix of housing types and lot sizes.
- For the non-residential areas, typical floor area ratios were assigned to the acres designated commercial, mixed use and light industrial to arrive at the maximum non-residential floor area. The maximum non-residential floor area is possible based on standard zoning assumptions relating to parking and landscape requirements. However, the actual non-residential development in the Riverside District could be at a much smaller sale and will largely depend on market demand.

- The acreage designated for Commercial (14 acres) and Light Industrial (13 acres) uses in the Master Plan is generally consistent with the zone change approved for the Edwards property in 2008. The Master Plan identifies one additional area for Commercial or Mixed Use (8 acres) in Subarea D that is currently in the Agriculture holding zone.

General land uses for each subarea are described below and illustrated on Figures 1 and 2 on the following pages. The allocation of housing units and non-residential floor area by subarea is shown in Table 2.

**Subarea A**, located west of the Bypass corridor and north of 8th Street, includes a mix of planned commercial and residential uses along with pocket parks. The land uses in Subarea A are generally consistent with the uses approved as part of the 2008 zone change for River Farms, LLC, with some refinements in the location of certain uses. General land use categories for Subarea A are summarized below.

- Permitted residential uses include a mix of single-family detached units on relatively small lots, single-family attached units (e.g., townhouses or rowhouses) and some multi-family uses. Lower density residential uses are planned at the west edge of Subarea A for compatibility with adjacent development. A broader mix of housing types and higher densities are accommodated in the central portion of the Subarea. The Master Plan targets development of up to 110 residential units in Subarea A.
- Commercial and Mixed uses are located in the easterly portion of Subarea A, abutting the Bypass and higher density residential uses. The commercial use category accommodates a variety of retail, service and office uses. Drive-through facilities will be prohibited to foster a village scale. The Riverside District Zone may limit the footprint of individual buildings, require conditional use approval for buildings over a certain size (such as 10,000 or 20,000 square feet) and impose design standards. The Commercial and Mixed Use areas will provide flexibility for vertical and horizontal mixed use, including upper story residential or office over ground floor commercial and live/work units. The Master Plan allows development of up to approximately 147,000 square feet of non-residential floor area in Subarea A, assuming typical floor area ratios for commercial development. The actual amount and scale of commercial development may be lower, based largely on market demand.

The Master Plan identifies the location of a neighborhood park in Subarea A. The Park location is based on neighborhood park size and location from the Dundee Parks and Open Space Plan. The size and location of the neighborhood park is conceptual, and the precise location and size will be determined as part of a future development application process.

**Subarea B**, located east of the Bypass corridor and north of 8th Street, is designated for light industrial use. Permitted uses in this area include food and beverage production and sales activities, which could include a "Vintner's Village" of independent wine production and tasting facilities and indoor and outdoor event space. Other permitted uses include eating and drinking facilities. The Master Plan envisions that uses in Subarea B will have a synergy with tourist, open space and recreational uses that take advantage of the riverside location east of the Bypass. The Master Plan allows development of up to 204,000 square feet of non-residential floor area in Subarea B, assuming typical floor area ratios for this type of development. The actual amount and scale of development in Subarea B may be lower, based largely on market demand.

**Subarea C**, located west of the Bypass corridor and south of 8th Street, is designated for public uses. This area is anticipated to be the location of a new elementary school. The school site may function in part to meet park needs during non-school hours. Preservation of the specimen Oak trees located in Subarea C will need to be factored into any development of the area for public uses. A multi-use path shall be located next to the Bypass and along the perimeter of Subarea C not abutting public right-of-way and connect to the SE Edwards Drive public right-of-way and SE 8th Street public right-of-way.

.

.

**Subarea D** includes a mix of residential, commercial and mixed use designations, as well as a possible golf course that may be located in the eastern portion of this subarea and extend into Subarea G. A neighborhood park is also required with development of this Subarea. Master Plan designations in this subarea include the following:

- A mixture of residential housing types and lot sizes, including single-family detached units on small to medium sized lots, single-family attached units (e.g., townhouses or rowhouses), duplex or tri-plex units and multifamily units. The Master Plan targets development of up to 277 residential units in Subarea D.

An area is identified for commercial or mixed use development in the northeast portion of Subarea D. Permitted uses include lodging, restaurants and recreation related uses, including a golf club house. The Master Plan envisions that uses in this commercial/mixed use area of Subarea D will have a synergy with tourist, open space and recreational uses that take advantage of the riverside location east of the Bypass. The Master Plan allows development of up to about 91,500 square feet of non-residential floor area in Subarea D. The actual amount and scale of commercial/mixed use development in Subarea D may be lower, based largely on market demand.

- The Master Plan also allows development of a golf course in a portion of Subarea D. A golf course is considered an appropriate use, but conditional use review is required to identify public access around and through a golf course to the riverfront. Because a specific location has not been defined, the acreage associated with a potential 9-hole golf course has not been deducted from the overall land inventory.
- The Master Plan identifies the conceptual location of a neighborhood park in Subarea D that will be dedicated with development, based on neighborhood park size and location criteria from the Dundee Parks and Open Space Plan. The precise location and size of the neighborhood park will be determined as part of a future development application process.

**Subarea E** includes the city's wastewater treatment plant (WWTP), approved treatment plant facilities, and a new nature park. All uses that are permitted outright or with conditional use approval in the Public (P) zone will be permitted in Subarea E. The Public zone permits the public facilities and park uses. Private golf and related facilities (such as a driving range) are identified as conditional uses in the Public zone.

**Subarea F** is designated for residential uses and a neighborhood park. Permitted residential uses include a mix of single-family detached units on small to medium sized lots, single-family attached units (e.g., townhouses or rowhouses), duplex and tri-plex units and multi-family units. The Master Plan targets development of up to 519 residential units in Subarea F. The Master Plan identifies the conceptual location of a neighborhood park in Subarea F that will be dedicated with development, based on neighborhood park size and location criteria from the Dundee Parks and Open Space Plan. The precise location and size of the neighborhood park will be determined as part of a future development application process.

**Subarea G** is currently located within the city limits but outside of the UGB. The Master Plan designates Subarea G for mixture of agriculture, parks, open space and recreational uses, including a regional riverfront park and trails, a possible 9-hole golf course and other open space areas. This area will remain zoned for Exclusive Farm Use by the City of Dundee until such time as it is brought into the city's UGB. All of the planned uses in this area are allowed in Dundee's EFU zone as outright or conditional uses, including a golf course. The Master Plan does not identify any housing, commercial or employment uses in Subarea G.

In April 2011, the Department of Land Conservation and Development (DLCD) indicated that golf courses are not allowed on high value farmland under state statutes and rules, even if the use is allowed under the City's EFU zone. This comment was brought up late in the process, and a golf course has been considered an appropriate use throughout the master planning process and was expressly discussed at the October design charrette for the Riverfront District. No changes to Dundee's acknowledged EFU zone are proposed as part of this process. The City of Dundee will support efforts to expand the UGB to coincide with the existing city limits and provide more appropriate zoning to accommodate the urban park, open space and recreational uses identified in the Riverside District Master Plan. The waterfront open space and recreational uses are integral to and needed to support the

overall development and open space vision of the Master Plan. Additionally, Yamhill County has recommended a UGB amendment that would accommodate the uses shown in the master plan and remove the on-going confusion regarding land use jurisdiction.

The following table summarizes projected acres of development by land use type, as well as target dwelling units, and square footage of retail, commercial, and industrial development for the Riverside District.

***Table 1 – Riverside District Land Uses***

| Locations/Designations | Acres | Percent[1] | Target Dwelling Units[3] | Maximum Floor Area of Development[4] |
|---|---|---|---|---|
| Inside urban growth boundary (UGB) | | | | |
| Residential | 85 | 32% | 906 | |
| Commercial | 22 | 8% | | 239,000 |
| Light Industrial | 13 | 5% | | 204,000 |
| Public | 15 | 6% | | |
| *Subtotal* | *135* | *51%* | *906* | *443,000* |
| Neighborhood Park | 8 | 3% | | |
| Nature Park | 24 | 10% | | |
| Roads (excluding Bypass) | 29 | 11% | | |
| Trails/green seams | 23 | 9% | | |
| Newberg Dundee Bypass corridor | 27 | 10% | | |
| Wastewater treatment plant[2] | 17 | 7% | | |
| *Subtotal (Inside UGB)* | *263* | *73%* | | |
| Outside UGB (open space or recreation) | 97 | 27% | | |
| **Total Planning Area** | **360** | **100%** | **906** | **443,000** |

Notes

1. Percentages are as a total of land within the UGB except the Subtotal and land outside the UGB.

2. A small portion of the treatment plant acreage reflected in this number is outside the UGB; acreage does not include potential turtle habitat areas south of Lagoon #4 (Canyon Lake)

3. Assumes a mix of housing types and an overall average density of about 10 units/acre.

4. Assumes floor area ratios of 0.25 for commercial and mixed use and 0.35 light industrial and hotel uses.

***Table 2 – Target Dwelling Units and Non-Residential Floor Area by Subarea and Land Use***

| Subarea | Land Use Designation | Acres | Target Dwelling Units | Max. Non-Residential Floor Area |
|---|---|---|---|---|
| A | Commercial | 14 | 14 | 147,500 |
| A | Residential | 13 | 96 | NA |
| B | Light Industrial | 13 | NA | 204,000 |
| C | Public | 11 | NA | NA |
| D | Commercial/Mixed Use | 8 | NA | 91,500 |
| D | Residential | 23 | 277 | NA |
| E | Public | 41[1] | NA | NA |
| F | Residential | 53 | 519 | NA |
| G | Agricultural, Open Space and Recreation | 97 | NA | NA |
| **TOTAL** | | **273[2]** | **906** | **443,000** |

Notes

1. Acreage includes approximate area of WWTP and planned Nature Park

2. This total does not include the area estimated for neighborhood parks, trails, roads and the Bypass corridor, shown in Table 1.

## B. Riverside District Policies

After the adoption and implementation of a new Riverside District Zone, the following policies will apply to Planning Commission review and approval of detailed master plan(s) and subdivision(s) of individual or consolidated subareas within the Riverside Master Plan District. The detailed master plan and subdivision reviews will be key steps in setting the stage for specific development of each subarea because they will:

- Establish and dedicate the local street system;
- Identify the specific location and size of neighborhood park(s) identified in the Master Plan and dedicate the planned park(s) in conjunction with the subdivision;
- Confirm that the number of residential lots is consistent with the overall target residential units;
- Layout infrastructure (particularly water and sewer) to accommodate the proposed subdivision and identify improvements needed to assure adequate public facilities; and
- Include a simple traffic analysis to assess the trips and required transportation improvements based on the overall transportation analysis completed for the Master Plan.

The policies will also apply to discretionary review of conditional uses, site design review and amendments of the Riverside District Master Plan. However, the policies will not apply to the review of individual building permits for development on platted lots that is consistent with the use tables and design standards of the Riverside District Zone once it is adopted.

### *Land Use*

As shown in Figure 1, the Riverside District Master Plan envisions the long-term development of a cohesive district that includes a mix of land uses and housing types served by an interconnected of "complete" streets

with planter strips, street trees and sidewalks. A substantial portion of the Riverside District will be devoted to park, open space and a trail network that will serve both the Riverside District and the larger community and provide a unique amenity for development. Non-residential development is targeted to the northerly 1/3 of the Riverside District. It is envisioned that commercial uses to the west of the Bypass will be smaller-scale neighborhood commercial uses. Non-residential uses to the east of the Bypass are envisioned to be larger-scale "destination" uses such as wineries, event facilities, hotel, restaurants and related uses.

1. The Riverside District Master Plan identifies the approximate location and acres of general land use categories by subarea (See Figure 2 and Table 2). Through the detailed master plan and subdivision process, the applicant shall have the ability to propose minor changes between the boundaries of the use areas, consistent with the overall target housing units and non-residential floor area allocated to the subarea.
2. When a partition or subdivision application is submitted for a subarea, even if it only includes a smaller first phase of development, a detailed master plan shall be submitted for the entire subarea to show the layout of streets and more precise location of the neighborhood park (if a conceptual location is shown on the approved Master Plan for the Subarea). The detailed master plan will provide the tool to track the target housing units and maximum non-residential floor area consistent with the allocations by subarea in Table 2.
3. A mixture of different building types is encouraged within the residential areas (e.g. single family residential, duplex, attached single family residential, multi-family). Outside of the overall target number of housing units specific for each subarea, it is expected that the Riverside District Zone will provide broad flexibility for a mix of housing types and lot sizes. The detailed master plan shall identify lots intended for attached and multifamily housing. To ensure efficient use of land in the Riverside District, an average density of 10 units per acre is established. Lot sizes may be averaged and densities may be shifted between subareas to provide flexibility to meet changing housing and market needs.
4. Development within subareas designated for commercial, mixed use and light industrial uses in Subareas A, B and D shall be consistent with the standards included in the Riverside District Zone (when adopted), including limitations on certain uses, maximum building size and basic design standards.
5. The approved Master Plan assumed certain categories of commercial and light industrial uses would be appropriate in the Riverside District. While the Riverside District Zone will provide some flexibility for the City to allow "similar uses" through a Type I-B review, a major change in the list of permitted and conditional uses will require Type II Planning Commission approval or a Type IV Development Code text amendment.
6. The Master Plan identifies a conceptual location for a potential golf course. While a golf course is considered an appropriate use in the Riverside District, conditional use approval is required to review the layout of the golf course relative to public trails and access to the riverfront. Additionally, conditional use approval is required for any portion of the golf course located within Dundee's Exclusive Farm Use (EFU) zone. Through the conditional use review process, the City shall also encourage the use of recycled wastewater or on-site water sources for golf course irrigation to avoid pressure on the City's domestic water supply sources. Based on input from the Department of Land Conservation and Development, development of a golf course on Dundee's designated EFU land may require a goal exception or UGB amendment.
7. The City will support a future UGB amendment application to include Subarea G within Dundee's UGB to accommodate the open space and recreational uses identified in the Riverside Master Plan. The location of this subarea inside of the city limits but outside of the UGB complicates land use jurisdiction.
8. If the School District identifies a need for future school(s) within the Master Plan area, appropriate site(s) shall be identified consistent with the policies of the Dundee Comprehensive Plan and/or School District Facility Plan.
9. The Riverside District Master Plan does not designate potential school sites and the transportation analysis

did not assume development of a school in any of the subareas. At a minimum, development of a public school within the Riverside District would require conditional use approval and a full traffic analysis. A school in a Public zone is a permitted use.

## *Transportation*

The main elements of the Riverside District transportation system are shown in Figure 3. This figure shows the approximate location of the two overcrossings of the Bypass that will be built by ODOT. The approximate location of the "Parkway Collector" is also shown to the east side of the Bypass. The local street system for the Riverside District will be defined as part of subsequent land use applications, based on established code standards for street connectivity and maximum block length.

1. The Riverside District Master Plan accommodates the development of the Bypass in the location shown in the Tier 2 Draft Environmental Impact Statement (Tier 2 DEIS) and the Dundee TSP. ODOT shall acquire all right-of-way needed for the Bypass and the overcrossings and construct the facilities.
2. The City and the affected property owners will continue to coordinate with ODOT on the location and design details for the overcrossings and landscaping of the berms. The City will advocate for a design that maximizes the developable area in the Riverfront District and reduces the visual impact of the Bypass.
3. An interconnected street system shall be provided within and between residential, commercial, and mixed use areas. Because local streets may be extended on an incremental basis in some subareas, it may be necessary to accept temporary dead-ends or "stub streets" that will be extended when future development occurs.
4. All streets shall be built to established standards for street connectivity and block length as set forth in Chapter 2.202 of the Development Code. Street standards in the Riverside District Zone shall supersede TSP or Development Code standards where they conflict.
5. The collector to the east side of the Bypass shall be developed to a "parkway" standard to integrate the subareas and help establish the overall design character of the Riverside District. In addition to providing internal connections east of the Bypass, construction of this road will ensure that all subareas east of the Bypass would have two ways to cross the Bypass, which is important for safety and emergency service reasons.
6. Street trees shall be required in all subareas of the Riverside District. Street trees shall be installed and maintained to the standards specified in the Development Code.
7. No private streets shall be allowed in the Riverside District.
8. Developers will be allowed and encouraged to construct green street features on local and collector streets to reduce the amount of stormwater entering local rivers and streams, reduce demand on the city's infrastructure and improve water quality. Modifications to street standards will be allowed without a variance at the subdivision phase if a developer proposes green street features that are approved by the City Engineer and Planning Commission.
9. Where cul-de-sacs are constructed, they shall comply with the maximum length standards in Section 2.202 of the City of Dundee Development Code. A pedestrian and bicycle connection may be required between the end of the cul-de-sac and the nearest local street to provide connectivity.
10. Sidewalks shall be provided along both sides of all streets. Where a wider multi-use path is provided (for example, on the side of the Parkway Collector adjacent to the Bypass or on the urban side of the Fulquartz Landing Road frontage), the multi-use path shall replace the required sidewalk.
11. A pedestrian/bicycle pathway shall be accommodated under the Bypass structure located near 10th Street to provide an ADA accessible connection between Dundee and the Riverside District. The City of Dundee may

pursue grants to fund construction of this undercrossing. ODOT has committed that the Bypass design will accommodate the pedestrian/bicycle pathway.

## Water, Wastewater and Stormwater

Water, wastewater and stormwater facilities that are needed to support proposed development in the Riverside District will require further planning of needed improvements, updates of city system development charges (SDCs) and other fees, and coordination between the city and property owners regarding the timing and funding of infrastructure improvements. The types of improvements required to serve the Riverside District are described in more detail in the Land Use Alternatives Report in Appendix B7 and the Cost Estimates, Funding Strategies and Responsibilities document Appendix B9 (adopted by reference).

1. Public facilities for the Riverside District shall be planned, designed and constructed in accordance with adopted Public Facility Master Plans for water, wastewater and stormwater.
2. Each subdivision or development application shall show that its water, wastewater and stormwater requirements can be met adequately by infrastructure that is in place or will be in place at the time of occupancy. The City Engineer shall review and confirm the adequacy of infrastructure plans prior to City approval of the land use application. As a general policy, the City requires that developers bear the cost of infrastructure improvements required to support their project.
3. As authorized by ORS 94.504, the City may require City Council approval of Development Agreements as a condition of subdivision or development application approval to allow the city and an applicant to coordinate in the provision of facilities to serve the development. The Development Agreement may require specific performance conditions for development of the property. These performance conditions may include, but are not limited to, construction of public facilities, dedication or reservation of land for right-of-ways, easements, or parks, or other conditions proper for the development.
4. Planning for water use should incorporate techniques and systems for water reuse and conservation to the greatest degree practical, including potential reuse of wastewater for irrigation or other purposes.
5. The City will encourage natural stormwater drainage systems designed to manage and filter as much stormwater on site as reasonably possible and to incorporate natural drainage and management techniques. Examples and illustrations of low impact development approaches that may be appropriate in the Riverside District are included in the Background Conditions Report, Charrette Report, and Land Use Alternatives Report in Appendix B.

## Parks, Open Space and Trails

Figure 1 illustrates the park and open space framework for the Riverside District, including planned neighborhood parks, a regional riverside park, a nature park, and a connected trail system to access the river and connect the various subareas. Figure 6 highlights natural resource and riparian areas and identifies the general location of the riparian buffer (50 foot width) and green seam buffer (30 foot width).

1. A minimum of three neighborhood parks shall be established within Subareas A , D, and F as shown in Figures 1 and 2 of the Riverside District Master Plan and based on the housing target of 906 dwelling units. The specific location and size of each neighborhood park shall be refined through the detailed master plan and subdivision process. However, each neighborhood park site shall be consistent with the location and size criteria in the adopted Dundee Parks and Open Space Master Plan and the Neighborhood park sites shall be developed in accordance with the provisions of the Parks and Open Space Zone (Chapter 17.203.130) of the Development Code. The City shall collaborate with Chehalem Parks and Recreation District (e.g. IGA) on Riverside District park and trail issues such as dedication, improvements, standards, maintenance, etc.

2. A regional riverside park is planned in Subarea G as shown on Figure 1. The existing sloped, wooded area within the riverside regional park area shall generally be protected in a natural state as part of future park development. This wooded area may contain trails or other passive recreational facilities (e.g., interpretive features).
3. Planning for the regional riverside park shall be coordinated between the City of Dundee and the Chehalem Park and Recreation District. Additionally, planning shall include coordination with the Oregon Department of Parks and Recreation to ensure opportunities to connect to a potential future state park on Ash Island, should such a park be developed.
4. Figure 1 of the Riverside Master Plan shows development of a "nature park" on city-owned property to the north of the wastewater treatment plant facilities. Development of this park should be consistent with the conceptual park plan approved by the City Council.
5. The Riverside District Master Plan establishes a buffer around the Canyon Lake Natural area, extending to approximately the 150-foot elevation line to the south and west of this area (see Figure 6). Within this area, human access and activity will be restricted to help protect habitat for two turtle species – the Western Painted and Western Pond Turtles. In addition, a secondary, additional riparian buffer of approximately 50 feet is established beyond the 150-foot elevation line, within which uses will be limited to natural resource protection, open space and passive recreation, such as walking and bicycling. A pedestrian and bicycle pathway may be constructed within this riparian buffer area.
6. The Riverside District Zone will protect riparian areas by using a regulatory approach consistent the State of Oregon's Goal 5 safe harbor approach (50 foot setback from top of bank), and by allowing developers (if they want an alternative to the safe harbor approach) to inventory riparian and other natural resources and identify alternative measures to protect them, consistent with the goals and requirements of the this Master Plan, as well as the city's Comprehensive Plan and Development Code.
7. A linked trail system shall be developed within the Riverside District and integrated with plans for the Willamette Greenway Trail and Chehalem Heritage Trail as shown on Figures 1 and 3. Through the subdivision and development permit process, the City of Dundee may require dedication or easements to accommodate the development of the trail system. In general, 30-foot wide easements will be adequate to accommodate 10-foot wide multipurpose trails. As noted above, a wider 50-foot easement will be required along the designated riparian corridors.
8. Locations of trail connections and associated riverfront recreational opportunity areas are conceptual and will be further detailed as future Action Items.
9. The City will support "green" development approaches, including co-location of stormwater swales in parks and along linear trail corridors to reduce land needs and costs and create opportunities for education, amenities, and recreational activities.

## C. Implementation

### *Land Use and Development*

Development of the Riverside District Master Plan is expected to occur over an extended period of time, given that land in the planning area represents a 20-year supply of buildable land based on future population projections for Dundee. Development of subareas A and C west of the Bypass is likely to occur first, given proximity to existing city transportation facilities and other municipal services. Development of a golf course in the eastern section of the planning area (portion of subareas D and G) could also occur earlier given that it would require limited public facilities in comparison to other land uses designated east of the Bypass corridor.

Development within the Master Plan area will be dependent on the ability to provide needed public infrastructure and services, including water, wastewater, stormwater and transportation facilities. General phasing objectives include the following, some of which are described in more detail in Section III Action Charts.

- A new Riverside District zone will be adopted to implement the Master Plan.
- When the Riverside District Zone is adopted, the City Council may condition approval of zone changes to the Riverside District Zone based on availability of adequate public facilities. A similar condition was attached to the 2008 approval of the plan amendment/zone change for Riverside Farms, LLC.
- Water, wastewater and stormwater facilities should be sized to accommodate projected total future levels of development. Reimbursement agreements, a Riverside District System Development Charge, development agreements or other mechanisms may be needed to ensure equitable arrangements for funding these facilities.
- Roads should be sized and constructed per the classifications and standards identified in this Plan and the City's TSP. Where development is proposed on only one side of a road, a half-street or three-quarter street improvement may be allowed if it provides adequate capacity and connectivity for automobile, bicycle and pedestrian travel.

## *Transportation Facilities and Improvements*

Phasing of transportation facilities and improvements will be related to a number of factors, including coordination with construction of the Bypass; implementation of needed improvements to facilities outside the planning area, including OR 99W, Fulquartz Landing, Edwards and Parks Drives and 5th and 8th Streets; and construction of a new parkway collector road east of the Bypass corridor. The Phasing Analysis documented below provides the City and ODOT with traffic volume thresholds that will trigger transportation improvements. This phasing analysis is intended to facilitate the timely construction of transportation facilities as their need arises, thereby relieving the need to perform individual traffic studies for each component of development. The City may choose to monitor traffic on the major transportation facilities serving to access the Southeast Dundee area, so as to better understand the imminence of approaching transportation needs. Phasing requirements and issues include the following:

- To the extent that development in the Riverside District occurs prior to construction of the Bypass, it must not preclude or interfere with eventual construction of the Bypass.
- The 8$^{th}$ Street right-of-way may continue to be used as a means of connecting the portions of the Master Plan area on either side of the Bypass corridor, prior to construction of the Bypass.
- Implementation of the 5$^{th}$ Street Extension will require approval of a statewide exception to Goal 3 (Agricultural Lands) or a minor UGB amendment. Prior to or in lieu of the 5$^{th}$ Street Extension, a combination of 8$^{th}$ Street (east of Edwards Road), Edwards Road (north and south of 8$^{th}$ Street) and 5$^{th}$ Street are likely to be used as the primary routes from the northern portion of the planning area to OR 99W. Use of these roads will necessitate the following interim transportation improvements (or improvements to be made in lieu):
    - Improvements to Edwards Road to meet Collector Street standards, including the provision of sidewalks, will be needed when development in Subareas A-D results in approximately 250 net new trips along Edwards Road (north and south of 8$^{th}$ Street) during the weekday p.m. peak hour. (See Table 3-6 for more information). These improvements should be constructed as new development along Edwards Road occurs, consistent with section 2.206 of the Dundee Development Code.
    - Improvements to 5th Street to meet Collector Street standards between OR 99W and Edwards Road will be needed when development in Subareas A-D results in approximately 200 net new trips along 5$^{th}$ Street during the weekday p.m. peak hour (see Table 3-6 for more information).

- Addition of a westbound right turn lane at the intersection of OR 99W/5th Street ($100,000) will be needed if development in Subareas A-D results in approximately 24 net new trips at the intersection during the weekday p.m. peak hour prior to construction of the Newberg Dundee Bypass. If this threshold of 24 additional trips is not met prior to construction of the Bypass, this improvement will not be needed.

- Construction of the planned Bypass overcrossing connecting to the 5th Street Extension will require that local infrastructure be in place first. This could include implementation of the 5th Street Extension or the interim improvements described above, as well as the extension of 8th Street to the east of the Bypass.
- The 5th Street Extension or a connecting link to the Bypass overcrossing should be fully constructed when the Bypass is constructed.
- As development occurs within the Master Plan area, construction of the planned North/South Parkway Collector east of the bypass corridor must be phased in such a way as to provide adequate connectivity both within the Master Plan area and between areas east and west of the future Bypass facility. Phasing should be as follows:
  1. If this road is constructed before construction of the Bypass:
     a. The road shall be partially constructed as frontage development of the collector is complete; or
     b. The road shall be fully constructed when 100% of development in Subarea D is complete, or
  2. If the road is constructed after or during construction of the Bypass and the Bypass construction severs connections between Subarea D and access to either 5th Street, 8th Street or Parks Drive, then ODOT must have a temporary detour plan in place to provide access between Subarea D and these facilities (5th, 8th or Parks).
- If Subareas D or F are developed before the Bypass is constructed, traffic from those developments would utilize Fulquartz Landing and Parks Drives to access OR 99W.
- Improvement of Parks Drive to a collector street standard, including the provision of sidewalks, will be needed when developments in Subareas A-G result in approximately 275 net new trips along Parks Drive during the weekday p.m. peak hour (see Table 3-6 for more information).
- Construction of a new traffic signal at Parks Drive and OR 99W will be needed when full build-out of Subareas A-G occurs with or without development of the Bypass, or when warranted (all new traffic signals must be approved by the state traffic engineer).
- Railroad crossings:
  - Railroad crossing improvements along 5th Street will be needed when development in Subareas A-D result in approximately 200 net new trips along 5th Street during the weekday p.m. peak hour (see Table 3-6 for more information).
  - Railroad crossing improvements at Parks Drive will be needed when development in Subareas A-G result in approximately 275 net new trips on Parks Drive during the weekday p.m. peak hour (see Table 3-6 for more information).

    *The threshold used to determine the phasing of these improvements relates to the point in time that traffic exceeds the volume guideline for a collector street, 3,000 vehicles per day (vpd), as defined in the Dundee TSP. (Note: A "Diagnostic Investigation", conducted in coordination with ODOT Rail, ODOT Highway, City, and rail providers, should be conducted in which these entities will establish the threshold for construction of rail improvements).*

The following tables summarize the assumptions and analysis used to estimate thresholds for needed transportation improvements within and outside the study area. Proposed land uses have been translated into total numbers of trips by subarea or a combination of subareas. These trips have in turn been distributed and assigned to the study area roadways.

***Table 3 – Riverside District Land Uses by Subarea***

| Land Use | Subarea A | Subarea B | Subarea C | Subarea D | Subarea E | Subarea F | Subarea G | Total |
|---|---|---|---|---|---|---|---|---|
| Single family residential (units) | 96 | 0 | 0 | 222 | 0 | 415 | 0 | 733 |
| Multifamily residential (units) | 14 | 0 | 0 | 55 | 0 | 104 | 0 | 173 |
| Commercial and retail (sq ft) | 131,500[5] | 0 | 0 | 91,500[3] | 0 | 0 | 0 | 223,000 |
| Public (sq ft) | 0 | 0 | 51,000 | 0 | 0 | 0 | 0 | 51,000 |
| Golf course[4] (holes) | 0 | 0 | 0 | 9 | 0 | 0 | 0 | N/A |
| Light industrial[2] (sq ft) | 0 | 204,000 | 0 | 0 | 0 | 0 | 0 | 204,000 |
| Neighborhood park (acres) | 4 | 0 | 0 | 2 | 0 | 2 | 0 | 8 |
| Regional & nature park (acres) | 0 | 0 | 0 | 0 | 25 | 0 | 30 | 55 |

[1] Golf course includes 9-holes and a club house/pro shop.
[2] Light Industrial includes wine tasting and production.
[3] Overall square-footage includes 50 hotel rooms.
[4] The clubhouse is located in Subarea D.
[5] The 14 multifamily residential units represent the remaining 16,000 square-feet of commercial and retail space shown in Table 2 above.

***Table 4 – Trip Generation Rates***

| Land Use | ITE Code | Trip Rate (PM Peak Hour) | Percent In | Percent Out |
|---|---|---|---|---|
| Single family residential (units) | 210 | 1.1 | 63% | 37% |
| Multifamily residential (units) | 230 | 0.78 | 67% | 33% |
| Hotel use (rooms) | 310 | .59 | 53% | 47% |
| Commercial and retail (sq ft) | 820 | 3.73 (1,000 sq ft) | 49% | 51% |
| *- Internal* | | *40% of trips* | *50%* | *50%* |
| *- Pass by* | | *10% of trips* | *50%* | *50%* |
| Golf course[1] | 430 | 2.78 | 45% | 55% |
| Light industrial[2] (sq ft) | 110 | 0.97/2[3] (1,000 sq ft) | 12% | 88% |
| Neighborhood park (acre) | 412 | 0.59 | 35% | 65% |
| Regional & nature park (acre) | 417 | 0.26 | 44% | 56% |

[1] Golf course is assumed to include 9-holes and a club house/pro shop.
[2] Light Industrial is assumed to include wine tasting and production.
[3] It is assumed that this use will generate approximately half as many trips as traditional light industrial uses.

Table 5 shows the estimated weekday p.m. peak hour trips generated by each land use within subareas.

***Table 5 – Estimated Riverside District Trip Generation – Weekday PM Peak Hour***

| Land Use | Subareas A | | | Subarea B | | | Subarea C | | | Subarea D | | | Subarea F | | | Total | | |
|---|---|---|---|---|---|---|---|---|---|---|---|---|---|---|---|---|---|---|
| | **In** | **Out** | **Total** | **In** | **Out** | **Total** | **In** | **Out** | **Total** | **In** | **Out** | **Total** | **In** | **Out** | **Total** | **In** | **Out** | **Total** |
| Single family residential | 67 | 39 | 106 | 0 | 0 | 0 | 0 | 0 | 0 | 154 | 90 | 244 | 288 | 169 | 457 | 509 | 298 | 807 |
| Multifamily residential | 7 | 4 | 11 | 0 | 0 | 0 | 0 | 0 | 0 | 29 | 14 | 43 | 54 | 27 | 81 | 90 | 45 | 135 |
| Elementary School (350 students) | 0 | 0 | 0 | 0 | 0 | 0 | 29 | 31 | 60 | 0 | 0 | 0 | 0 | 0 | 0 | 29 | 31 | 60 |
| Hotel use | 0 | 0 | 0 | 0 | 0 | 0 | 0 | 0 | 0 | 16 | 14 | 30 | 0 | 0 | 0 | 16 | 14 | 30 |
| Commercial and retail | 269 | 280 | 549 | 0 | 0 | 0 | 0 | 0 | 0 | 28 | 29 | 57 | 0 | 0 | 0 | 297 | 309 | 606 |
| *- Internal* | *(110)* | *(110)* | *(220)* | *0* | *0* | *0* | *0* | *0* | *0* | *(11)* | *(11)* | *(22)* | *0* | *0* | *0* | *(121)* | *(121)* | *(242)* |
| *- Pass by* | *(16)* | *(16)* | *(32)* | *0* | *0* | *0* | *0* | *0* | *0* | *(2)* | *(2)* | *(4)* | *0* | *0* | *0* | *(18)* | *(18)* | *(36)* |
| Golf course[1] | 0 | 0 | 0 | 0 | 0 | 0 | 0 | 0 | 0 | 11 | 14 | 25 | 0 | 0 | 0 | 11 | 14 | 25 |
| Light industrial[2] | 0 | 0 | 0 | 12 | 87 | 99 | 0 | 0 | 0 | 0 | 0 | 0 | 0 | 0 | 0 | 12 | 87 | 99 |
| Neighborhood parks | 1 | 2 | 3 | 0 | 0 | 0 | 0 | 0 | 0 | 0 | 1 | 1 | 0 | 1 | 1 | 1 | 4 | 5 |
| Regional & nature parks[3] | 0 | 0 | 0 | 3 | 4 | 7 | 0 | 0 | 0 | 3 | 4 | 7 | 0 | 0 | 0 | 6 | 8 | 14 |
| **Total** | **218** | **199** | **417** | **15** | **91** | **106** | **29** | **31** | **60** | **228** | **153** | **381** | **342** | **197** | **539** | **832** | **671** | **1503** |

[1] Golf course is assumed to include 9-holes and a club house/pro shop.
[2] Light Industrial is assumed to include wine tasting and production.
[3] The trip generation estimates for Subareas G and E are included in Subareas B and D, respectively. These parks generate a combined estimated 23 trips during the weekday p.m. peak hour.

Table 6 shows the estimated trip distribution of the weekday p.m. peak hour trips generated by each subarea shown in Table 5 onto the major roadways in the study area. The percent distribution (Dist.) represents the proportion of overall trips from each subarea expected to use the specified roadway with and without the 5th Street extension.

***Table 6 – Estimated Trip Distribution by Subarea***

| Roadway | Subarea A | | Subarea B[1] | | Subarea C | | Subarea D[1] | | Subarea F | | Total ADT |
|---|---|---|---|---|---|---|---|---|---|---|---|
| | Dist. | Trips | Dist. | Trips | Dist. | Trips | Dist. | Trips | Dist. | Trips | |
| 5th Street via Edwards Road | 50% | 209 | 50% | 53 | 50% | 29 | 50% | 191 | 0% | 0 | 482 |
| 10th Street via Edwards Road | 25% | 104 | 0% | 0 | 25% | 14 | 0% | 0 | 0% | 0 | 118 |
| Parks Drive via Fulquartz Landing | 25% | 104 | 50% | 53 | 25% | 14 | 50% | 190 | 100% | 539 | 900 |
| ***Total*** | ***100%*** | ***417*** | ***100%*** | ***106*** | ***100%*** | ***57*** | ***100%*** | ***381*** | ***100%*** | ***539*** | ***1500*** |

[1] The estimated trip distribution pattern for Subareas G and E were assumed to be consistent with Subareas B and D, respectively.

In addition to the trips shown in Table 6, approximately 25 percent of the trips from subareas A and C and 100 percent of the trips from subareas C and D are expected to use 8th Street to access Edwards Road. The remaining trips from subareas A and C are expected to access Edwards Road via the local street network.

# III. Future Actions

## Other Implementation and Phasing Issues and Actions

Additional implementation issues will need to be addressed by the city, property owners, and/or other local and state agencies and stakeholders to support development of the Riverside District. The following Action Chart highlights key actions, estimated time frame and lead and supporting parties. The Action Chart does not reflect City budget commitments but is intended to highlight the scope of some of the Action Items.

***Table 7 – Riverside District Action Chart***

| Action # | Action Item Descriptions | Time Frame | Lead/Support |
|---|---|---|---|
| **WATER SUPPLY AND WATER MASTER PLAN** | | | |
| 1 | Obtain memo from Murray Smith & Associates regarding existing water supply capacity. | Include in hearing record prior to adoption of Master Plan – COMPLETE | City |
| 2 | Coordinate with City Attorney to define Riverside District Zone strategy relating to adequate public facilities (particularly water supply). | Define initial strategy prior to public hearing(s) for adoption of Plan – COMPLETE | City/City Attorney |
| 3 | Pursue interim measures to expand water supply to allow limited development. | 1-2 years | City |
| 4 | Establish schedule, budget and scope to update Water System Master Plan. | 1-2 years | City |
| 5 | Based on updated Water Master Plan, proceed with more detailed planning/design of water supply improvements (could include using water right to the Willamette River and construction of water treatment plant). | 2-5 years | City |
| **REFINE AND ADOPT NEW RIVERSIDE DISTRICT ZONE** | | | |
| 5 | Complete additional work to refine 3rd Draft of Riverside District Zone and address PC/CC issues (particularly related to scale of commercial/light industrial uses and design standards). | 6 months/1 year | City/Property Owners |
| 6 | Proceed with quasi-judicial or legislative zone changes when new Riverside District Zone is in place and adequate public facilities assured. | 1-3 years | Property Owners/City |
| **RIVERSIDE DISTRICT AREA SYSTEMS DEVELOPMENT CHARGE (SDC)** | | | |
| 7 | Consider special study to evaluate an area-wide SDC for the Riverside District to assure equitable funding of required infrastructure (including water, wastewater, transportation and neighborhood parks and trails). | 1-5 years | City/Property Owners/Consultant |

| Action # | Action Item Descriptions | Time Frame | Lead/Support |
|---|---|---|---|
| **BYPASS** | | | |
| 8 | Refine design of bridges over the Bypass in the Riverside District (cross-section, grade, etc.). | On-going | ODOT/City/Property Owners |
| 9 | Coordinate with ODOT on landscaping of berms adjacent to the Bypass (including maintenance). | 1-3 years | ODOT/City/Property Owners |
| 10 | Acquire right-of-way for Bypass and related improvements. | 1-5 years | ODOT/Property Owners |
| 11 | Construct Phase 1 of Bypass through Dundee. | 3-7 years | ODOT |
| **5th STREET EXTENSION** | | | |
| 12 | Meet with DLCD Field Representative and Yamhill County planning staff to discuss options for a goal exception or minor UGB amendment to accommodate 5th Street Extension. | Within next year | City/County/DLCD |
| 13 | Meet with Columbia Empire Farms to explore willingness to allow or support the 5th Street Extension. If there is no support, refine alternative for primary access into the Riverside District within the existing UGB. | 1-2 years | Affected Property Owners/City |
| 14 | If there is support, prepare land use application for a statewide goal exception or minor UGB amendment. If feasible, combine a UGB amendment to expand the UGB to the city limits boundary and also to accommodate the 5th Street Extension. | 2-3 years | Property Owner |
| 15 | Include the 5th Street Extension (if approved)and the Riverside District Parkway and other Collectors in the update of the Dundee TSP. | 2-5 years | City/ODOT |
| **UGB EXPANSION (Without 5th Street Extension)** | | | |
| 16 | Prepare application and/or consider UGB expansion to match the existing city limits boundary. Because this area (Subarea G) is identified for public open space and recreational uses, it might be a relatively simple application. | Following adoption of Master Plan | Property Owner(s)/City |
| **PARKS & TRAILS** | | | |
| 17 | Coordinate meeting and possible IGA to discuss Riverside District park & trail issues (dedication, improvement, standards, maintenance, etc.) | 1-2 years | City/CPRD |
| 18 | Complete more detailed park and trial planning as neighborhood parks are dedicated and trail easements obtained. | 5-20 years | City/CPRD/Developers |
| 19 | Evaluate funding options and pursue Nature Park improvements on the WWTP property. | 1-10 years | City |
| 20 | Coordinate with other agencies and advocacy groups on park and trail development in the | On-going | City/CPRD/Oregon Parks/Park Advocacy |

| Action # | Action Item Descriptions | Time Frame | Lead/Support |
|---|---|---|---|
| | Riverside District. | | Groups |
| **STREET TREES & STREET SIGNS/LIGHTING** | | | |
| 21 | Form an ad hoc committee to evaluate and propose appropriate street trees to require in the Riverside District; amend the Riverside District Zone to specify certain species if needed. | 2-3 years | City/Property Owners |
| 22 | Based on *Framework Plan to Establish a Unique Visual Identity*, identify appropriate street lighting and street signs to tie in with past work and help establish a cohesive design character for the Riverside District. Amend the Riverside District Zone or Public Works Standards as needed. | 2-3 years | City/Property Owners |
| **SUSTAINABILITY** | | | |
| 23 | Partner with public agencies, non-profit organizations, and Dundee residents and business owners to develop a city-wide sustainability plan to:<br>• Require and/or promote water conservation and efficiency<br>• Remove barriers and explore incentives to promote "low impact development"<br>• Support green design standards for public and private development projects (through Development Code and/or Public Works Standards). | 1-10 years | Citizens/Non-Profits/Advocacy Groups/City |

# Appendices

To be provided with final version

**Appendix A – Comprehensive Plan Amendments – New Riverside District Chapter**

**Appendix B – Supporting Documents (Adopted by Reference)**
Appendix B1 – Project Goals, Objectives and Evaluation Criteria
Appendix B2 – Meeting Summaries
Appendix B3 – Public Involvement Summary
Appendix B4 – Dundee Identity Framework Plan
Appendix B5 – Background Conditions Report
Appendix B6 – Charrette Report
Appendix B7 – Land Use Alternatives Report
Appendix B8 – Transportation Analysis
Appendix B9 – Cost Estimates, Funding Strategies and Responsibilities

# Appendix A

Comprehensive Plan Amendments – New Riverside District Chapter
(Amended December 2022)

RIVERSIDE DISTRICT

GOAL: Adopt a new Riverside District comprehensive plan designation and master plan to provide a land use and transportation framework to guide long-term development of the Riverside District.

OBJECTIVES

1. Apply a new Riverside District comprehensive plan designation to the approximately 360 acre planning area within the city limits shown in Figure 1.

2. Adopt the Riverside District Master Plan (June 2011) and amended November 2022 by reference as a support document to the Dundee Comprehensive Plan.

3. Adopt comprehensive plan policies specific to the Riverside District.

4. Recognize that adoption of the comprehensive plan framework (text and map amendments) represents the first steps in a multi-step process required prior to development. Future actions will include, but not be limited to:

    - Preparation of more detailed infrastructure and financial plans to assure adequate public facilities and services to support the master plan;

    - Development Code text amendment to adopt new Riverside District Zone;

    - Zone Change(s) to apply the new Riverside District Zone;

    - Detailed master plans (by subarea) to establish local street network, identify specific park sites and trail connections, lay out blocks, refine mix of land uses and set range of densities, mix of housing types and lot sizes, establish phasing schedule, etc.

    - Subdivision(s) to divide land in accordance with detailed master plans; dedicate local streets, parks and trail and utility easements; install public and private improvements, etc.

    - Potential site design review for non-residential buildings, unless clear and objective design standards are adopted as part of the detailed master plan for a particular subarea.

EXISTING CONDITIONS

The Riverside District was annexed to the City of Dundee in 1969, prior to adoption of Senate Bill 100 and Oregon's statewide planning program. When the Dundee Comprehensive Plan was adopted in 1977, the majority of the Master Plan area was included in Dundee's Urban Growth Boundary (UGB). The city applied an Agriculture (A) holding zone to approximately 235 acres within the UGB and plan policies called for incremental rezoning of the agricultural land for residential use based on need.

Agricultural and undeveloped lands on the lower terrace near the Willamette River were not included in the 1977 UGB. The city applied an Exclusive Farm Use (EFU) zone to preserve approximately 125 acres within the city limits for farm uses.

The Riverside District is still largely undeveloped, with the exception of the wastewater treatment plant and a few single family dwellings. In 2008, Dundee City Council re-zoned about 54 acres in the northerly portion of the Riverside District from the Agriculture holding zone to a mix of residential (R-2 and R-3), commercial (CC) and light industrial (LI) zones. Conditions were attached to the zone change approval to limit certain uses, require submittal and approval of a master plan and assure adequate public facilities prior to development of the subject property. During the zone change process, the City Council expressed interest in using the master planning process to ensure integrated planning and development of the entire Riverside District instead of piecemeal rezoning.

Plans for the Newberg-Dundee Bypass also have significant implications for development in the Riverside District. After a lengthy federal environmental review process, Yamhill County and the cities of Newberg, Dundee and Dayton all approved the Bypass alignment and adopted comprehensive plan policies to support the Bypass. The Bypass alignment fragments the Riverside District. The Bypass will have full access control and ODOT will build two overcrossings in the vicinity of 8th Street and Fulquartz Landing Road/Parks Drive to provide connectivity across the Bypass and maintain access to the Willamette River.

The master plan document summarizes background information and existing conditions for the Riverside District planning area. A Background Conditions Report (August 2010) provides more detailed information on existing conditions.

FINDINGS OF FACT

The Riverside District encompasses the majority of the city's buildable land inventory. The City of Dundee initiated the master planning process in 2010 to provide a more detailed land use and transportation plan to guide coordinated development of this special area. The project was

funded by a grant from the Oregon Department of Transportation and Growth Management (TGM) Program.

The Riverside District features a number of unique assets and opportunities:

- A relatively small number of property owners and large parcels of undeveloped land, making master planning easier;
- A prime location along the Willamette River, with outstanding views of the river and surrounding areas in addition to access to water-based recreation;
- Natural resources that provide intrinsic natural values as well as amenities to future residents and visitors; and
- Community support for the master planning process.

The Riverside District master plan reflects substantial input from the public involvement process, including opportunities for on-going coordination with the major property owners. A key step in the planning process was a design charrette, held October 10-14, 2010, to identify land use and transportation plan alternatives for the Riverside District. A market study and a transportation analysis informed the selection of the preferred alternative.

A preliminary, planning-level analysis of public facilities and services needed to implement the preferred alternative was prepared and included in the Land Use Alternatives Report. However, that report was very clear that more analysis of costs and financing mechanisms and responsibilities will need to be conducted to implement the master plan.

On March 31, 2011, Murray, Smith & Associates, Inc. (MSA) presented a memorandum to the City Administrator to provide an estimate of the available capacity of the City of Dundee's existing water supply sources to serve additional development within the City's Urban Growth Boundary (UGB). The memorandum clearly documented the severity of the constraints on the existing water supply.

Following consideration of the water supply issue, the City decided to proceed with the first steps in the planning process (adoption of the Riverside District plan designation and this Comprehensive Plan chapter) and defer adoption of the Riverside District Zone and rezoning land in the Riverside District until adequate public facilities and services can be assured.

POLICIES

1. The policies in this Riverside District chapter shall replace and supersede any policies in the Dundee Comprehensive Plan that relate to the area within the new Riverside District plan designation.

2. The City will identify the boundaries of the Riverside District plan designation on the Comprehensive Plan Map as shown in Figure 1.

3. The City will retain existing zoning that applies within the Riverside District plan designation. Existing zoning shall be considered consistent with the Riverside District plan designation because existing zones allow less intensive, lower density development than anticipated in the Riverside District Master Plan. Uses and development allowed under existing zoning regulations will be allowed, consistent with the provisions of the Dundee Development Code, statewide administrative rules and statutes, all of these policies, and any conditions of prior zoning and development approvals.

4. The waterfront uses are integral to and needed to support the overall development and open space vision of the Master Plan. The City will support the concept of expanding the UGB to coincide with the existing city limits and provide more appropriate zoning to accommodate the urban park, open space and recreational uses identified in the Riverside District Master Plan.

5. The City will adopt the Riverside District Master Plan (June 2011) and as amended November 2022 by reference as a supporting document to the Dundee Comprehensive Plan. The Master Plan is intended to identify a coordinated mix of residential, commercial, public, tourism and open space and recreational uses that are cohesive and connected with Dundee's larger community vision. The Master Plan includes additional policies that will be applicable to review and approval of future zone changes, detailed master plans and subdivisions within the Riverside District.

6. Because the Master Plan is considered a concept document, the City will consider refinements to the location and arrangement of land uses and other aspects of the Master Plan prior to or in coordination with implementation of Riverside District zoning. Any changes to the concept Master Plan must include the following limitations and components:

    - A maximum of 22 acres designated for Commercial uses.

    - A maximum of 13 acres designated for Light Industrial uses.

- A mix of housing types and densities, with a target of 906 units in the Riverside District.
- In areas where the Riverside District is adjacent to developed, lower density residential areas, the development standards of the lower density zone (maximum heights and setbacks) shall apply to new housing on abutting lots in the Riverside District.
- Neighborhood park sites shall be required based on the target of 906 dwelling units according to the standards of the Dundee Parks and Open Space Plan.
- A connected trail system shall be required to accommodate the Willamette River Trail, the Chehalem Heritage Trail, and connecting local trails within the Riverside District that link to the larger community trail system.
- Cross-sections for trail improvements shall accommodate linear stormwater quality facilities, particularly along the top of the bluff.
- A connected local street system with cross-sections specified to encourage sidewalks, planter strips, and street trees. Blocks shall not exceed a maximum length of 400 feet in commercial areas or 600 feet in residential areas.
- A parkway collector shall be required to provide a north-south link of development subareas to the east of the Bypass and connections to the two Bypass overcrossings. The cross-section for the parkway collector shall be consistent with the standards in the Dundee TSP.
- Riparian corridors shall be protected with a minimum 50-foot setback from the top of bank elevation.

7. Planning for water use should incorporate techniques and systems (e.g. “purple pipe”) for water reuse and conservation to the greatest degree practical, including potential reuse of wastewater for irrigation or other purposes.

8. All development within the Riverside District shall be adequately supported by the required facilities and services, including parks, schools, transportation, water, stormwater and wastewater infrastructure. Implementing ordinances shall provide that:

    - Required facilities and services must be available concurrent with development; and

- No implementing zoning map amendment may be granted except upon a finding that all required facilities and services are available, or can be made available, concurrent with development.

IMPLEMENTATION

The Riverside District Master Plan includes an Action Chart that identifies implementation action issues that will need to be addressed by the city, property owners, and/or other local and state agencies and stakeholder to support development of the Riverside District. The Action Chart does not reflect City budget commitments but is intended to highlight the scope of some of the action items.

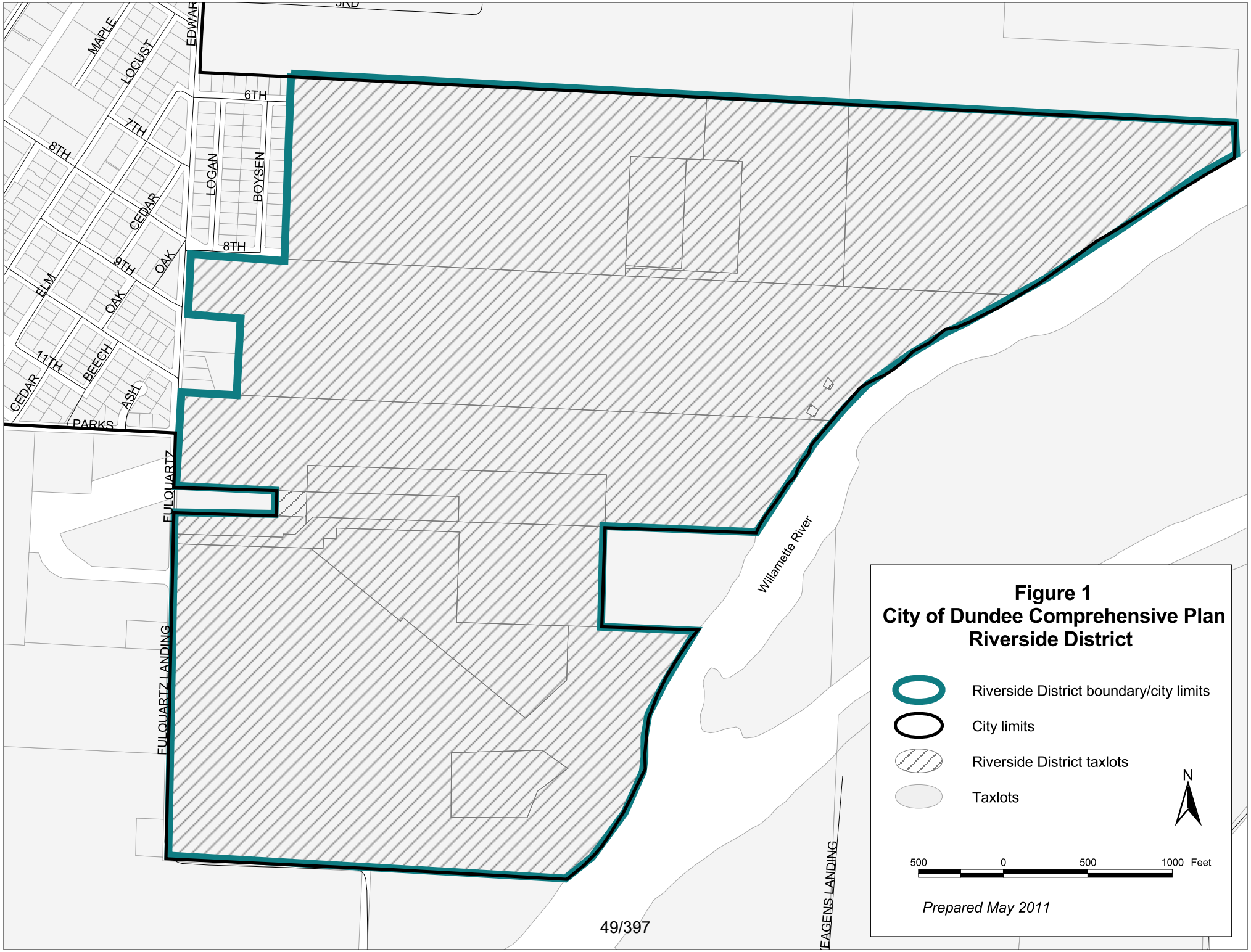


**Figure 1**
**City of Dundee Comprehensive Plan**
**Riverside District**

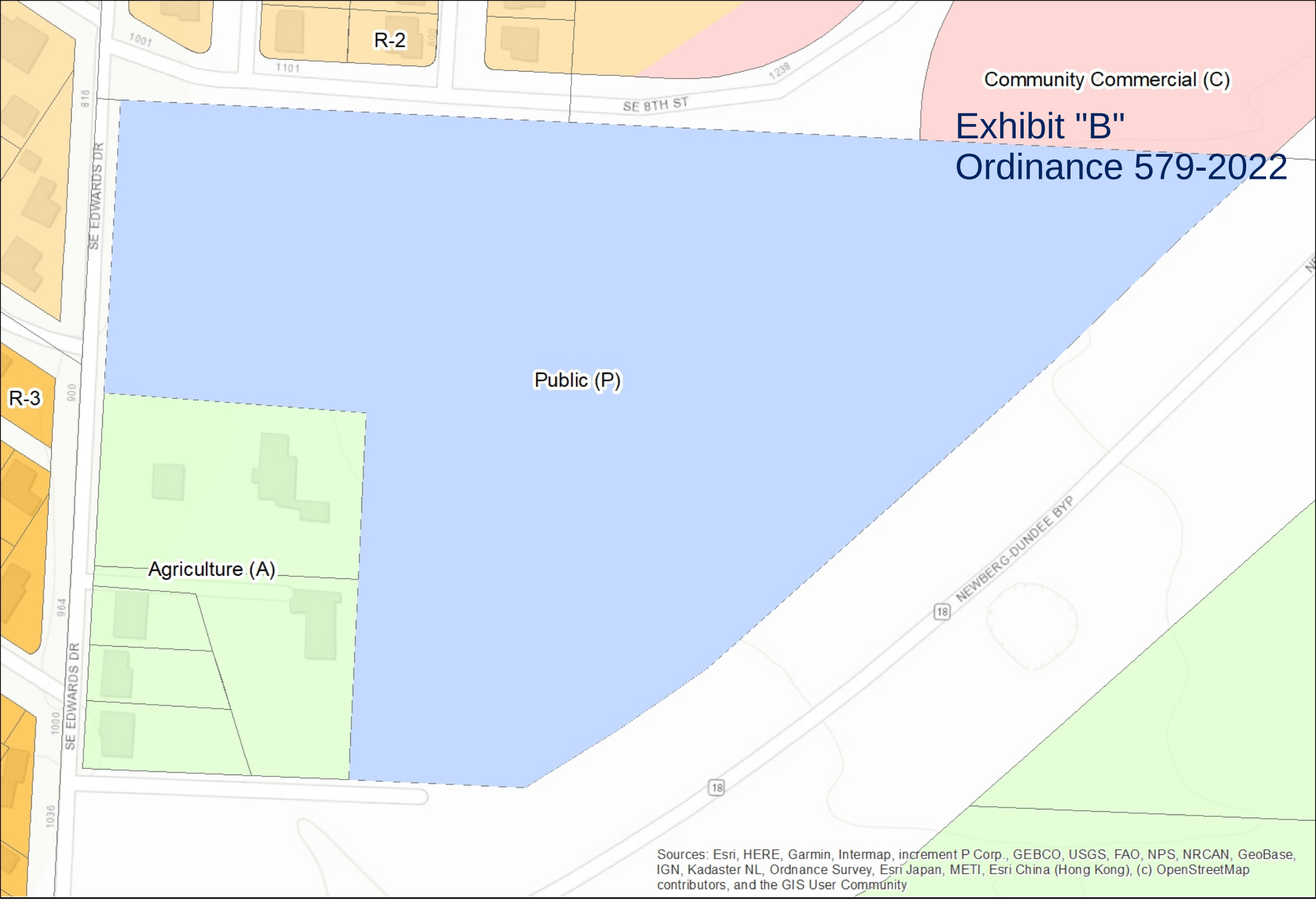


Proposed Zoning

**EXHIBIT "C"**
**ORDINANCE NO. 579-2022**
**DEVELOPMENT CODE CRITERIA & FINDINGS**
**[CPA 22-16 & ZC 22-16, Southeast corner**
**SE Edwards Drive/SE 8th Street]**

The proposal includes an amendment to the Comprehensive Plan Text (Comprehensive Plan and District Riverside Master Plan) and Zoning Map. The proposed amendments either comply or do not comply with the Dundee Development Code, Dundee Comprehensive Plan goals & policies, and Oregon statewide planning goals, rules, and statutes, as demonstrated by the findings below.

***Findings for Comprehensive Plan and Zoning Map Amendment:***

> ***17.405.030 Criteria. Approval of an ordinance amending the zoning map, comprehensive plan map, comprehensive plan, or development code shall be based on the following:***
>
> ***A. Zoning Map Amendment. Proposals for a zoning map amendment must comply with the following criteria:***
>
> ***1. The proposal must be consistent with the comprehensive plan map (the comprehensive plan map may be amended concurrently with proposed changes in zoning).***

**Finding:** The proposal includes corresponding amendments to the comprehensive plan text and Riverside District Master Plan to allow for an elementary school; therefore, the proposed zoning amendment will be consistent and meet the criterion.

> ***2. The site(s) must be appropriate for the proposed change, in terms of purpose of the proposed zone, topography, access, and required size and dimensions.***

**Finding:** Currently the site has A (Agriculture) zoning. The proposal is to rezone the site to P (Public). The P (Public) zoning designation would allow a new elementary school per DMC 17.202.020 Allowed uses, as a permitted use. The purpose of the P (Public) zone is to allow for a variety of public uses. DMC 17.202.010 Purpose states "I. Public Zone (P). The P zone provides for public and semi-public uses, where such uses do not unreasonably disrupt or alter other areas of the community." The current A (Agriculture) zoning purpose per DMC 17.202.010 Purpose is "A. Agricultural Zone (A). The A zone encourages the continuation of productive farmland within the city." Redesignating the site from A (Agriculture) to P (Public) does not disrupt or alter other areas of the community to accommodate a new public improvement project because the proposed site is vacant, does not displace existing residential development, and will serve the entire community including the emerging Riverside District Master Plan area.

The topography of the site is relatively flat sloping gently from north to south. The flat nature of the site could accommodate a new elementary school and its associated improvements of parking, outdoor play areas and ball fields.

Access for the site can be provided from SE 8th Street (Parkway Collector) and SE Edwards Drive (Collector). Access to the balance of the community for the elementary school can be provided by SE Edwards Drive north of SE 8th Street (Parkway Collector), SE 5th Street (Parkway Collector) and SE Parks

Drive (Collector). The actual access for the site would be determined through the Site Development Review process as a later step in developing a new elementary school. The site is adjacent to the Newberg Dundee Bypass which is designated by ODOT as an Expressway and does not provide access to the subject property.

The size of the site is 15.48 acres which can accommodate an elementary school, parking, bus drop-off and pickup and sport fields. The property shape is irregular. The applicant's narrative indicates that undeveloped portions of the site not necessary for the elementary school could possibly be developed for residential uses in the future.

***3. Public facilities are available, or can be readily made available, to adequately serve the permitted and conditional uses of the proposed zone.***

**Finding:** Public facilities are available in adjacent streets (SE Edwards Drive and SE 8th Street) and can be extended to serve the proposed new elementary school.

***4. The amendment must conform to the transportation planning rule provisions under DMC 17.405.040.***

**Finding:** The proposed zone change is from A (Agriculture) to P (Public). The applicant provided an analysis of effects from the proposed zone change pursuant to Oregon Revised Statutes (OAR) 660-012-0060. No significant impact upon transportation facilities was found that would alter the existing functional classification of any of the existing street designations. This analysis is addressed in further detail under the findings for DMC 17.405.040.

***B. Comprehensive Plan Map Amendment. Proposals for an amendment to the comprehensive plan must comply with the following criteria:***

***1. The supply of vacant land in the proposed designation is inadequate to accommodate development during the next five years, or the site is not physically or locationally suited to the requirements of the existing designation;***

**Finding**: The applicant's proposal identified amending the Comprehensive Plan Map to designate the site as P (Public) from A (Agriculture). Discussions between staff and the applicant were that the site currently has a Comprehensive Plan Map designation of RD (Riverfront District), and the City was not supportive of modifying the Comprehensive Plan designation. Instead, the focus would be on the zone change and Comprehensive Plan text amendment including changes to the Riverside District Master Plan that is a component of the Comprehensive Plan. The applicant concurred with this approach.

***2. The supply of vacant land in the existing designation remains adequate after the proposed change to accommodate development during the next five years;***

**Finding:** The applicant's proposal identified amending the Comprehensive Plan Map to designate the site as P (Public) from A (Agriculture). Discussions between staff and the applicant were that the site currently has a Comprehensive Plan Map designation of RD (Riverfront District), and the City was not supportive of modifying the Comprehensive Plan designation. Instead, the focus would be on the zone change and Comprehensive Plan text amendment including changes to the Riverside District Master Plan that is a component of the Comprehensive Plan. The applicant concurred with this approach.

***3. The proposal is consistent with applicable comprehensive plan goals and policies, statewide planning goals and Oregon Administrative Rules.***

**Finding:** The applicant's proposal identified amending the Comprehensive Plan Map to designate the site as P (Public) from A (Agriculture). Discussions between staff and the applicant were that the site currently has a Comprehensive Plan Map designation of RD (Riverfront District), and the City was not supportive of modifying the Comprehensive Plan designation. Instead, the focus would be on the zone change and Comprehensive Plan text amendment including changes to the Riverside District Master Plan that is a component of the Comprehensive Plan. The applicant concurred with this approach.

**D. Comprehensive Plan Amendment. Proposals for a comprehensive plan amendment must comply with applicable statewide planning goals and Oregon Administrative Rules and Revised Statutes.**

The proposed Comprehensive Plan Amendment and Riverside Master Plan amendment is consistent with applicable comprehensive plan goals and policies, statewide planning goals, and OARs as follows.

**APPROVAL CRITERIA**

**A. Statewide Planning Goals (the "Goals")**

**GOAL 1: CITIZEN INVOLVEMENT**
To develop a citizen involvement program that ensures the opportunity for citizens to be involved in all phases of the planning process.

**Finding:** The City meets this requirement by having various citizen committees and/or commissions with opportunities for the public to testify on general or specific matters. The proposal went before the Dundee Planning Commission on October 19, 2022, and Dundee City Council on November 14, 2022, which provided the opportunity for public comment. Finally, notice was published in the Newberg Graphic newspaper and posted in four public places.

The amendments are subject to the Type IV Quasi-Judicial process, which requires public notification and public hearings before the Planning Commission and the City Council. This process has been established by the City and determined to be consistent with Goal 1 of the Oregon Statewide Planning Goals. The public hearing notice of the action and decision, and the hearings on this case before the Planning Commission and the City Council are all recognized as opportunities for citizen participation.

The Goal is met.

**GOAL 2: LAND USE PLANNING**
To establish a land use planning process and policy framework as a basis for all decisions and actions related to use of land and to assure an adequate factual base for such decisions and actions.

**Finding:** This Goal requires that land use decisions 1) have an adequate factual base, 2) that alternatives have been considered, and 3) that implementation measures are consistent with and adequate to carry

out comprehensive plan policies and designations.

Dundee has an ongoing land use planning program, which includes using the adopted Comprehensive Plan, Development Code, and related plans to guide planning activities within the city. This proposed amendment to the Comprehensive Plan and Zoning Map will help keep the Plan relevant and current. The proposed land use action has an adequate factual base and is based on the Dundee Comprehensive Plan, Riverside District Master Plan, and Dundee Development Code.

The Goal is met.

**GOAL 3: AGRICULTURAL LANDS**
To preserve and maintain agricultural lands.

**Finding:** Not applicable because the proposal does not propose any comprehensive plan or land use regulation changes to agricultural lands outside of the Dundee Urban Growth Boundary. The Agricultural zoning designation proposed to be changed is a holding zone within the Riverside Master Plan and within the Urban Growth Boundary.

The Goal is met.

**GOAL 4: FOREST LANDS**
To conserve forest lands by maintaining the forest land base and to protect the state's forest economy by making possible economically efficient forest practices that assure the continuous growing and harvesting of forest tree species as the leading use on forest land consistent with sound management of soil, air, water, and fish and wildlife resources and to provide for recreational opportunities and agriculture. Staff concurs with the applicant's findings in Attachment 4.

**Finding:** Not applicable because the proposal does not propose any comprehensive plan or land use regulation changes to forest lands inside or outside of the Dundee Urban Growth Boundary.

**GOAL 5: NATURAL RESOURCES, SCENIC AND HISTORIC AREAS, AND OPEN SPACES**
To protect natural resources and conserve scenic and historic areas and open spaces.

**Finding:** The proposed amendment will not negatively impact inventoried Goal 5 resources because the comprehensive plan amendment and zone change do not change protections that already exist in the Dundee Comprehensive Plan or Dundee Municipal Code, and Master Plans to protect these resources. Dundee has an acknowledged inventoried historic resources and identified open spaces in compliance with Goal 5. Staff concurs with the applicant's findings in Attachment 4.

This Goal is met.

**GOAL 6: AIR, WATER AND LAND RESOURCES QUALITY**
To maintain and improve the quality of the air, water and land resources of the state.

**Finding:** Dundee has an acknowledged Comprehensive Plan that complies with this goal. Protections are already in place for air, water, and land resource quality. This proposal does not modify the existing goals and policies. Amending the Comprehensive Plan and changing the zoning does not negatively

impact Goal 6. Staff concurs with the applicant's findings in Attachment 4.

This Goal is met.

**GOAL 7: AREAS SUBJECT TO NATURAL HAZARDS**
To protect people and property from natural hazards.

**Finding:** Dundee has an acknowledged Comprehensive Plan that complies with this goal. This proposal does not modify the City's natural hazards goals, policies, or requirements such as flood plain or landslide areas. This proposal does not modify the existing goals and policies. Staff concurs with the applicant's findings in Attachment 4.

This Goal is met.

**GOAL 8: RECREATIONAL NEEDS**
To satisfy the recreational needs of the citizens of the state and visitors and, where appropriate, to provide for the siting of necessary recreational facilities including destination resorts.

**Finding:** Dundee has an acknowledged Comprehensive Plan that complies with this goal. Proposed amendments to the Comprehensive Plan and the zone change slightly modify the recreation needs with a reduction of 64 dwelling units in Subarea C of the Riverside Master Plan. The Dundee Parks and Open Space Plan under the section The Plan, General Theme, Park Development Standards indicates the following: "The following location and development principals are set
for new park planning and development:
[…]
5. Construction of any new school shall include development of new park land incorporating playground facilities, open space, and sports fields."
[…] *Page 22-23*

"Using these six principals, and incorporating the national and CPRD parks standards, the City's park development standards are established. These are reflected in the table below:

| **Dundee Park Development Standards** | | | | | |
|---|---|---|---|---|---|
| Park Classification | Size | Area Served | Facilities | Other Standards | Developed Facilities |
| Neighborhood | 2 to 5 acres | ¼ - ½ mile radius without barriers such as highways or arterial streets | Playground, outdoor multipurpose court with basketball backboards, picnic tables, open space accessible by walkways, water fountain, may or may not have restrooms | Off-street parking not required.<br>2.5 acres per 1,000 population<br>Tied into open space corridor system.<br>Geographically located near the center of each | Falcon Crest Park |

| | | | | | |
|---|---|---|---|---|---|
| | | | | neighborhood area | |

Page 24

“The Parks Plan, Neighborhood Parks

[…]

There are no parks serving the neighborhoods on the east side of the highway. A neighborhood park is needed to serve this area but there is no land within the Therefore, this need must be met by a new park neighborhood available on which to build a park. built as close to the neighborhood as possible within the developing lands to the east.

The developing area between the existing neighborhood and the river will be the future site of hundreds of new homes. This area clearly needs neighborhood parks to be developed as the homes are built.

The area is impacted by the alignment of the future Dundee-Newberg Bypass and the development of east/west major streets accessing the new neighborhoods. Using the ¼ to ½ mile radius and the barrier standards, three new neighborhood parks will be needed to serve this area. Two of these are shown in very general locations on the Parks Plan map. The function of the third will be integrated into the planned community park which will be central to this neighborhood.

[…]” *Page 25*

“Pathways

[…]

The routes for the corridor system are shown on the map included in this plan. In most cases, the routes follow streets where the path will take the form of a sidewalk. In other cases, the opportunity exists to have a separated path that may have a differing character. In some cases, on minor local streets, no separate pedestrian facility is needed. The precise location of paths in the currently undeveloped land near the river will be determined as development plans are considered.

[…]

Bypass to Dundee riverfront connector – These paths are to be located during future neighborhood planning process, and are to show the connection between the Bypass and the riverfront area.

[…]

Pathways and Crossings along the Newberg-Dundee Bypass - It is the City of Dundee’s policy position that access to the Dundee riverfront area shall be a high priority in the design of the Newberg-Dundee Bypass. Crossing the Bypass is to include a minimum of three crossing points for pedestrians, bicyclists, and vehicles. Access for wildlife movement is required in the design.
The crossings shall have the following characteristics:

• Wherever a local street crossing is designed to traverse the Bypass, it shall include no less than one

pedestrian facility designed and built to be ADA requirements.

• All facilities shall be made both attractive and safe and be light and open.
• A walking path shall be built along the Bypass right-of-way through the City. It shall have connections to the pedestrian facilities incorporated into local streets crossing the Bypass." *Page 29*

The 2011 Riverside Master Plan identifies the location of a Neighborhood Park in Subarea C. "[…] The Master Plan identifies the location of a neighborhood park in Subarea C that will be dedicated with development. The park location reflects the amenity value of specimen Oak trees and is based on neighborhood park size and location criteria from the Dundee Parks and Open Space Plan. The size and location of the neighborhood park is conceptual and the precise location and size will be determined as part of a future development application process." *Page 13*

The 2011 Riverside Master furthers the discussion of Parks, Open Space and Trails as follows:

"Parks, Open Space and Trails
Figure 1 illustrates the park and open space framework for the Riverside District, including planned neighborhood parks, a regional riverside park, a nature park, and a connected trail system to access the river and connect the various subareas. Figure 6 highlights natural resource and riparian areas and identifies the general location of the riparian buffer (50 foot width) and green seam buffer (30 foot width). 1. A minimum of three neighborhood parks shall be established within Subareas C, D, and F as shown in Figures 1 and 2 of the Riverside District Master Plan and based on the housing target of 970 dwelling units. The specific location and size of each neighborhood park shall be refined through the detailed master plan and subdivision process. However, each neighborhood park site shall be consistent with the location and size criteria in the adopted Dundee Parks and Open Space Master Plan and the Neighborhood park sites shall be developed in accordance with the provisions of the Parks and Open Space Zone (Chapter 2.111) of the Development Code. The City shall collaborate with Chehalem Parks and Recreation District (e.g. IGA) on Riverside District park and trail issues such as dedication, improvements, standards, maintenance, etc." *Page 19*

The proposed revisions to eth 2011 Riverside Master Plan for the siting of an elementary school will provide recreational needs for the community by providing playground facilities, open space, and sports fields as depicted in the conceptual site plan as Attachment 7 outside of normal school hours. The school site during non-school hours would be accessible for residents to utilize the fields and recreation equipment that would be provided by the elementary school development. The 2011 Riverside Master Plan identifies a Pocket Park and Open Space in Subarea A as shown in Figure 1 of the Plan. With the reduction of 64 dwelling units in Subarea C and the target of 110 dwelling units in Subarea A the overall acreage needed for park land based on the Dundee Parks and Open Space Plan of 2.5 acres per 1,000 population the size of the park would need to be about ½ acre. Either the Pocket Park or Open Space could be redesignated to be the Neighborhood Park and in conjunction with the playground facilities, open space, and sports fields at the new elementary school park space could be satisfied. The proposal does not modify the City's recreational goals and policies for park acres per population based on the type of park designation.

This Goal is met.

**GOAL 9: ECONOMIC DEVELOPMENT**
To provide adequate opportunities throughout the state for a variety of economic activities vital

to the health, welfare, and prosperity of Oregon's citizens.

**Finding:** This goal is not applicable because the proposed application and changes do not affect commercial and industrial activities. Staff concurs with the applicant's findings in Attachment 4.

**GOAL 10: HOUSING**
To provide for the housing needs of citizens of the state.

**Finding**: The proposal reduces the planned housing capacity in the Riverside District Master Plan by 64 units to accommodate the elementary school. The Riverside District Master Plan anticipated that the Newberg Public School District might locate a school within the master plan area but did not specifically identify a location. With the School District identifying and purchasing a site some displacement of anticipated development activities within the master plan area would occur in either future residential, commercial, or industrial areas. Removal of 64 future residential units does not render the Riverside District Master Plan as unachievable. The units could be made up in other residential identified areas. The applicant's supplemental material in Attachment 4 updates the residential numbers in the Riverside District Master Plan area.

The Goal is met.

**GOAL 11: PUBLIC FACILITIES AND SERVICES**
To plan and develop a timely, orderly and efficient arrangement of public facilities and services to serve as a framework for urban and rural development.

**Finding:** The proposed Comprehensive Plan Amendment and Zone change does not change the City's Water Master Plan, Wastewater Master Plan or Stormwater Master Plan. These plans have been developed to accommodate the growth within the community and the Riverside District aster Plan area. Staff concurs with the applicant's findings in Attachment 4.

The proposal meets the Goal.

**GOAL 12: TRANSPORTATION**
To provide and encourage a safe, convenient and economic transportation system.

**Finding:** The proposed Comprehensive Plan amendment and Zone change does not change the City's Transportation System Plan. This plan has been developed to accommodate the growth within the community. The applicant's proposal as indicated in Attachment 4 does not change a functional classification of roadways to serve the proposed elementary school. Roadways serving the site include SE 8th Street (Parkway Collector) and SE Edwards Drive (Collector). Access to the balance of the community for the elementary school is be provided by SE Edwards Drive north of SE 8th Street (Parkway Collector), SE 5th Street (Parkway Collector) and SE Parks Drive (Collector). Residential development between Highway 99W and SE Edwards Drive are served by local residential streets.

The proposal meets the Goal.

**GOAL 13: ENERGY CONSERVATION**
To conserve energy.

**Finding:** Staff has reviewed the applicant's findings related to energy conservation and concurs with those findings including the use of alternative transportation modes (walking and bicycling) and efficient energy design of the new elementary school to current energy codes.

This Goal is met.

**GOAL 14: URBANIZATION**
To provide for an orderly and efficient transition from rural to urban land use, to accommodate urban population and urban employment inside urban growth boundaries, to ensure efficient use of land, and to provide for livable communities.

**Finding:** The proposed Comprehensive Plan and Zone change are proposed within the existing Urban Growth Boundary. The A (Agriculture) zoning designation is a holding zone in the Riverside District Master Plan until future urban development occurs.

This Goal is met.

**GOAL 15: WILLAMETTE RIVER GREENWAY**
To protect, conserve, enhance and maintain the natural, scenic, historical, agricultural, economic and recreational qualities of lands along the Willamette River as the Willamette River Greenway.

**Finding:** Not applicable as the proposed Comprehensive Plan Amendment and Zone change does not change the Willamette River Greenway goals, policies or implementing regulations. The City of Dundee is located along the Willamette River on it eastern border.

This Goal is met.

**B. Dundee Comprehensive Plan**

**II. GOALS AND POLICIES**

**LAND USE AND URBANIZATION**

GOAL: To provide sufficient land to meet the needs for future Urban Expansion.

Objectives:

1. Define a growth policy, and identify areas of possible future expansion.
2. Project population growth to the year 2000, and identify land needs to support that population.
3. Establish an Urban Growth Boundary.

**Finding:** The Riverside District Master Plan adopted in 2011 identifies future urban development for the City of Dundee. The applicant's proposal modifies a small portion of the Plan for Subarea C change the future development pattern from residential to public to accommodate a new elementary school.

Dundee's Comprehensive Plan projects population out to 2000. This section of the Comprehensive Plan

needs to be updated to include a population projection out to 2040. The Riverside District Master Plan responds to a growing population base to accommodate new housing, commercial, and industrial development in addition to park and open space areas for the community.

Dundee has an established Urban Growth Boundary. The applicant's proposal does not modify the Urban Growth Boundary.

**OPEN SPACES, NATURAL AND CULTURAL RESOURCES**

GOAL: To conserve open spaces and preserve natural and cultural resources.

OBJECTIVES:
1. Ensure adequate open space to meet the needs of Dundee's citizens.
2. Preserve scenic, historic, and natural resource areas.
3. Promote a healthy, clean and aesthetic environment.

**Finding:** The proposed amendment will not negatively impact inventoried Goal 5 resources because the Comprehensive Plan Amendment and Zone change do not change protections that already exist in the Dundee Comprehensive Plan or Dundee Municipal Code, and Master Plans to protect these resources. Dundee has an acknowledged inventoried historic resources and identified open spaces in compliance with Goal 5. Staff concurs with the applicant's findings in Attachment 4.

This Goal is met.

**AIR, WATER, AND LAND RESOURCES**

GOAL: To maintain and improve the quality of the area's air, water, and land resources.

OBJECTIVES:
1. Designate areas suitable for controlling pollution.
2. Establish buffers to protect those lands set aside for pollution control.

**Finding:** Dundee has an acknowledged Comprehensive Plan that complies with this goal. Protections are already in place for air, water, and land resource quality. This proposal does not modify the existing goals and policies. Amending the Comprehensive Plan and changing the zoning does not negatively impact Goal 6. Staff concurs with the applicant's findings in Attachment 4.

This Goal is met.

**NATURAL HAZARDS**
(Amended by Ordinance No. 490-2010 adopted March 2, 2010)

GOAL: To protect life and property from natural hazards.

OBJECTIVES
1. Inventory hazards areas.
2. Ensure that proper protective measures are taken to prevent potential damage in hazard areas.

**Finding:** Dundee has an acknowledged Comprehensive Plan that complies with this goal. This proposal does not modify the City's natural hazards goals, policies, or requirements such as flood plain or landslide areas. This proposal does not modify the existing goals and policies. Staff concurs with the applicant's findings in Attachment 4.

This Goal is met.

**RECREATION AND WILLAMETTE RIVER GREENWAY**

GOAL: To provide adequate park land and recreation facilities for area residents and visitors and preserve land within the Willamette River Greenway.

OBJECTIVES:

1. To establish and set aside areas for parks and other recreational facilities and uses in a manner compatible with surrounding uses.
2. To establish a park and open space system that fulfills the needs and desires of local citizens.
3. To achieve the maximum possible benefits from local recreation opportunities by combining both public and private development.

**Finding:** Dundee has an acknowledged Comprehensive Plan that complies with this goal. Proposed amendments to the Comprehensive Plan and the zone change slightly modify the recreation needs with a reduction of 64 dwelling units in Subarea C of the Riverside Master Plan. The Dundee Parks and Open Space Plan under the section The Plan, General Theme, Park Development Standards indicates the following: "The following location and development principals are set
for new park planning and development:
[…]
5. Construction of any new school shall include development of new park land incorporating playground facilities, open space, and sports fields."
[…] *Page 22-23*

"Using these six principals, and incorporating the national and CPRD parks standards, the City's park development standards are established. These are reflected in the table below:

| **Dundee Park Development Standards** | | | | | |
|---|---|---|---|---|---|
| Park Classification | Size | Area Served | Facilities | Other Standards | Developed Facilities |
| Neighborhood | 2 to 5 acres | ¼ - ½ mile radius without barriers such as highways or arterial streets | Playground, outdoor multipurpose court with basketball backboards, picnic tables, open space accessible by walkways, water | Off-street parking not required.<br>2.5 acres per 1,000 population<br>Tied into open space corridor system.<br>Geographically | Falcon Crest Park |

| | | | | | |
|---|---|---|---|---|---|
| | | | fountain, may or may not have restrooms | located near the center of each neighborhood area | |

Page 24

“The Parks Plan, Neighborhood Parks

[…]

There are no parks serving the neighborhoods on the east side of the highway. A neighborhood park is needed to serve this area but there is no land within the Therefore, this need must be met by a new park neighborhood available on which to build a park. built as close to the neighborhood as possible within the developing lands to the east.

The developing area between the existing neighborhood and the river will be the future site of hundreds of new homes. This area clearly needs neighborhood parks to be developed as the homes are built.

The area is impacted by the alignment of the future Dundee-Newberg Bypass and the development of east/west major streets accessing the new neighborhoods. Using the ¼ to ½ mile radius and the barrier standards, three new neighborhood parks will be needed to serve this area. Two of these are shown in very general locations on the Parks Plan map. The function of the third will be integrated into the planned community park which will be central to this neighborhood.

[…]” *Page 25*

“Pathways

[…]

The routes for the corridor system are shown on the map included in this plan. In most cases, the routes follow streets where the path will take the form of a sidewalk. In other cases, the opportunity exists to have a separated path that may have a differing character. In some cases, on minor local streets, no separate pedestrian facility is needed. The precise location of paths in the currently undeveloped land near the river will be determined as development plans are considered.

[…]

Bypass to Dundee riverfront connector – These paths are to be located during future neighborhood planning process, and are to show the connection between the Bypass and the riverfront area.

[…]

Pathways and Crossings along the Newberg-Dundee Bypass - It is the City of Dundee’s policy position that access to the Dundee riverfront area shall be a high priority in the design of the Newberg-Dundee Bypass. Crossing the Bypass is to include a minimum of three crossing points for pedestrians, bicyclists, and vehicles. Access for wildlife movement is required in the design.

The crossings shall have the following characteristics:

• Wherever a local street crossing is designed to traverse the Bypass, it shall include no less than one pedestrian facility designed and built to be ADA requirements.

• All facilities shall be made both attractive and safe and be light and open.
• A walking path shall be built along the Bypass right-of-way through the City. It shall have connections to the pedestrian facilities incorporated into local streets crossing the Bypass." *Page 29*

The 2011 Riverside Master Plan identifies the location of a Neighborhood Park in Subarea C. "[…] The Master Plan identifies the location of a neighborhood park in Subarea C that will be dedicated with development. The park location reflects the amenity value of specimen Oak trees and is based on neighborhood park size and location criteria from the Dundee Parks and Open Space Plan. The size and location of the neighborhood park is conceptual and the precise location and size will be determined as part of a future development application process." *Page 13*

The 2011 Riverside Master furthers the discussion of Parks, Open Space and Trails as follows:

"Parks, Open Space and Trails
Figure 1 illustrates the park and open space framework for the Riverside District, including planned neighborhood parks, a regional riverside park, a nature park, and a connected trail system to access the river and connect the various subareas. Figure 6 highlights natural resource and riparian areas and identifies the general location of the riparian buffer (50 foot width) and green seam buffer (30 foot width). 1. A minimum of three neighborhood parks shall be established within Subareas C, D, and F as shown in Figures 1 and 2 of the Riverside District Master Plan and based on the housing target of 970 dwelling units. The specific location and size of each neighborhood park shall be refined through the detailed master plan and subdivision process. However, each neighborhood park site shall be consistent with the location and size criteria in the adopted Dundee Parks and Open Space Master Plan and the Neighborhood park sites shall be developed in accordance with the provisions of the Parks and Open Space Zone (Chapter 2.111) of the Development Code. The City shall collaborate with Chehalem Parks and Recreation District (e.g. IGA) on Riverside District park and trail issues such as dedication, improvements, standards, maintenance, etc." *Page 19*

The proposed revisions to eth 2011 Riverside Master Plan for the siting of an elementary school will provide recreational needs for the community by providing playground facilities, open space, and sports fields as depicted in the conceptual site plan as Attachment 7 outside of normal school hours. The school site during non-school hours would be accessible for residents to utilize the fields and recreation equipment that would be provided by the elementary school development. The 2011 Riverside Master Plan identifies a Pocket Park and Open Space in Subarea A as shown in Figure 1 of the Plan. With the reduction of 64 dwelling units in Subarea C and the target of 110 dwelling units in Subarea A the overall acreage needed for park land based on the Dundee Parks and Open Space Plan of 2.5 acres per 1,000 population the size of the park would need to be about ½ acre. Either the Pocket Park or Open Space could be redesignated to be the Neighborhood Park and in conjunction with the playground facilities, open space, and sports fields at the new elementary school park space could be satisfied. The proposal does not modify the City's recreational goals and policies for park acres per population based on the type of park designation.

The Willamette River Greenway is not applicable as the proposed comprehensive plan amendment and

zone change does not change the Willamette River Greenway goals, policies or implementing regulations. The City of Dundee is located along the Willamette River on it eastern border.

This Goal is met.

**ECONOMY**

GOAL: To maintain a level of economic development adequate to meet public need.

OBJECTIVES:
1. To protect areas well suited for business use from encroachment by other uses.
2. To assure that commercial and industrial developments preserve and enhance the aesthetic character and livability of Dundee.
3. To avoid unnecessary "strip," or scattered commercial development along Highway 99W.

**Finding:** This goal is not applicable because the proposed application and changes do not affect commercial and industrial activities. Staff concurs with the applicant's findings in Attachment 4.

**HOUSING**

GOAL: Meet the projected housing needs of citizens within the planning area.

OBJECTIVES:
1. Provide a variety of housing types to meet the needs of different family sizes and incomes.
2. Encourage housing in suitable areas to minimize public facility and service costs.
3. Provide opportunities for small town living.

**Finding:** The proposal reduces the planned housing capacity in the Riverside aster Plan by 64 units to accommodate the elementary school. The Riverside District Master Plan anticipated that the Newberg Public School District might locate a school within the master plan area but did not specifically identify a location. With the School District identifying and purchasing a site some displacement of anticipated development activities within the master plan area would occur in either future residential, commercial, or industrial areas. Removal of 64 future residential units does not render the Riverside District Master Plan as unachievable. The units could be made up in other residential identified areas. The applicant's supplemental material in Attachment 4 updates the residential numbers in the Riverside District Master Plan area.

The Goal is met.

**PUBLIC FACILITIES AND SERVICES**

GOAL: Provide orderly and efficient public services and facilities to adequately meet the needs of Dundee's citizens.

OBJECTIVES:
1. Protect the general health of local residents by providing adequate sanitary sewerage,

sewage treatment, solid waste disposal, and water facilities.

2. Ensure the safety and health of Dundee's citizens through adequate police and fire protection.

**Finding:** The proposed Comprehensive Plan amendment zone change does not change the City's Water Master Plan, Wastewater Master Plan or Stormwater Master Plan and are updated approximately every 10 years. These plans have been developed to accommodate the growth within the community. Staff concurs with the applicant's findings in Attachment 4.

**TRANSPORTATION SYSTEM PLAN**

GOAL
To provide and encourage a safe, convenient, aesthetic and economical transportation system, addressing the needs of all citizens within the community.

OBJECTIVES

A. The development of a well-connected street network that is safe, accessible and efficient for motorists, pedestrians, bicyclists and the transportation disadvantaged.
B. Preserve the aesthetic quality of the community.
C. The construction of a safe, continuous and direct network of streets, access ways, and other improvements, including bikeways, sidewalks, and safe street crossings to promote safe and convenient bicycle and pedestrian circulation within Dundee.
D. Develop policies for the location and improvement of arterials, collectors, local streets and sidewalks.
E. Improve the transportation links within the region as well as other regions of the state, while encouraging alternative transportation mode for commuters.

**Finding:** The proposed Comprehensive Plan amendment and zone change does not change the City's Transportation System Plan. This plan has been developed to accommodate the growth within the community. The applicant's proposal as indicated in Attachment 4 does not change a functional classification of roadways to serve the proposed elementary school. Roadways serving the site include SE 8th Street (Parkway Collector) and SE Edwards Drive (Collector). Access to the balance of the community for the elementary school is be provided by SE Edwards Drive north of SE 8th Street (Parkway Collector), SE 5th Street (Parkway Collector) and SE Parks Drive (Collector). Residential development between Highway 99W and SE Edwards Drive are served by local residential streets.

The proposal meets the Goal.

**ENERGY**

GOAL: To conserve energy resources.

OBJECTIVES:

1. Encourage energy conservation through sound land use planning policies.
2. Conserve energy by reducing traffic congestion.

**Finding:** Staff has reviewed the applicant's findings related to energy conservation and concurs with those findings including the use of alternative transportation modes (walking and bicycling) and efficient

energy design of the new elementary school to current energy codes.

This Goal is met.

**CITIZEN INVOLVEMENT AND PLAN AMENDMENT PROCESS**

GOAL: To develop a citizen involvement program to ensure public input into the planning process.

OBJECTIVE: To ensure that the opportunity exists for citizens to be involved in all phases of the planning process.

**Finding:** The City meets this requirement by having various citizen committees and/or commissions with opportunities for the public to testify on general or specific matters. The proposal went before the Dundee Planning Commission on October 19, 2022, and Dundee City Council on November 14, 2022, which provided the opportunity for public comment. Finally, notice was published in the Newberg Graphic newspaper and posted in four public places.

The amendments are subject to the Type IV Legislative process, which requires public notification and public hearings before the Planning Commission and the City Council. This process has been established by the City and determined to be consistent with Goal 1 of the Oregon Statewide Planning Goals. The public hearing notice of the action and decision, and the hearings on this case before the Planning Commission and the City Council are all recognized as opportunities for citizen participation.

The Goal is met.

**17.405.040 Transportation planning rule compliance.**

**Proposals to amend the comprehensive plan or zoning map shall be reviewed to determine whether they significantly affect a transportation facility pursuant to OAR 660-012-0060 (Transportation Planning Rule – TPR). Where the city council, in consultation with the applicable roadway authority, finds that a proposed amendment would have a significant effect on a transportation facility, the city shall work with the roadway authority and applicant to modify the request or mitigate the impacts in accordance with the TPR and applicable law. [Ord. 521-2013 § 3 (Exh. A)].**

**Finding:** The applicant in Attachment 4 provided a Transportation Planning Rule Analysis (TPR) that concluded there was no significant effect on the transportation system based on the Comprehensive Plan amendment and Zone change request. The analysis was based the site being developed with 64 residential units as identified in the Riverside District Master Plan verses a 350-student elementary school at the same location ins Subarea C. The analysis indicates that there would not be any functional classification change to the transportation system. Roadways serving the site include SE 8th Street (Parkway Collector) and SE Edwards Drive (Collector). Access to the balance of the community for the elementary school is be provided by SE Edwards Drive north of SE 8th Street (Parkway Collector), SE 5th Street (Parkway Collector) and SE Parks Drive (Collector). Residential development between Highway 99W and SE Edwards Drive are served by local residential streets. The analysis indicates that an elementary school would generate 19 more weekday trips compared to the residential use of the property. Finally, the intersections of:

- OR 99W/ 5th Street
- OR 99W/ 10th Street
- OR 99W/ Parks Drive/ Niederberger Road
- Edwards Drive/ 5th Street
- Edwards Drive/ 8th Street

The conclusion indicated in Attachment 4 is that the intersections would continue to meet City and ODOT standards with the site zoned for public use with an elementary school.

The City Engineer provided the following comment: "I do not have a conflict with the zone change but I do not agree with the traffic study's determination that no significant impact will result from the placement of the school at this location. Further evaluation of the driveways and loading/unloading zones will be needed during the design review for the school. Local streets in this area will be impacted and traffic flow needs to be further evaluated. The City has already received comments from concerned residents in this area."

**C. Dundee Municipal Code**

**17.401.010 Purpose and applicability.**

**4. Type IV Procedure (Quasi-Judicial Review – Planning Commission and City Council Hearings). The Type IV procedure applies to certain small-scale quasi-judicial decisions (i.e., small zone changes, right-of-way vacations, and annexations) that are considered by the planning commission for a recommendation to city council, and then by the city council for a final decision.**

**5. Type V Procedure (Legislative Review – Planning Commission and City Council Hearings). The Type V procedure applies to the creation or revision, or large-scale implementation, of public policy (i.e., adoption of regulations, zone changes, annexation, and comprehensive plan amendments). Type V reviews are considered by the planning commission for a recommendation to city council. City council makes the final decision on legislative proposals.**

**Finding:** Public hearings with the Planning Commission and the City Council are required to finalize a decision regarding the application for the amendment to the Development Code. This application was processed as Type V under the Legislative Review process.

This requirement can be met.

## Attachment 1: Agency/Public Comments

## Melody Osborne

**From:** Brooks Bateman <brooks.bateman@newbergoregon.gov>
**Sent:** Tuesday, August 30, 2022 9:17 AM
**To:** Melody Osborne
**Subject:** RE: Request for Agency Comment

Melody,

Please mark this "reviewed no conflict" I don't know how to mark it myself.

Thank you,

Brooks Bateman CBO
Building Official
City of Newberg
P. O. Box 970, Newberg Oregon 97132
www.newbergoregon.gov

---

**From:** Melody Osborne <Melody.Osborne@dundeecity.org>
**Sent:** Wednesday, August 24, 2022 1:57 PM
**To:** Brooks Bateman <brooks.bateman@newbergoregon.gov>
**Subject:** Request for Agency Comment

This email originated from outside the City of Newberg's organization. Do not click links or open attachments unless you recognize the sender and know the content is safe.

Hi Brooks,

I've attached a request for Agency Comment for a zone change/comp map amendment in Dundee. The requested deadline is September 16.

Melody Osborne
Administrative Assistant
503-538-3922 ext. 0

Planning Department
PO Box 220
620 SW 5th Street
Dundee, Oregon 97115

CITY of DUNDEE Oregon

Doug Rux, City Planner
503-537-1212
503-538-1958 fax
Doug.Rux@newbergoregon.gov

# Request for Agency Comment

Date: August 24, 2022

To: Chief Brandon Hamilton
Dundee Fire Department

Request: **Zone Change and Comprehensive Map Change from Agricultural (A) to Public (P).** The proposal is to rezone 15.48-acres on the corner of SE 8th and SE Edwards Streets from Agricultural to Public for the future development of a new elementary school.

File No.: ZC/CMA 22-16
Applicant: Harper Houf Peterson Righellis, Inc.

The enclosed material has been referred to you for your information, review, and comment. If you wish to have your remarks on the enclosed material considered, please return this form by **September 16, 2022**.

Please note: If a comment is not received by the deadline indicated, the decision-making body will assume that there is no conflict between the request and the interests of your agency or organization and make its decision accordingly.

---

Please check the appropriate space below and provide any comments you wish in the space provided, or on additional sheets. Your prompt reply is greatly appreciated.

☐ Additional time needed for review. Expect comments by _____.
☒ Reviewed, no conflict.
☐ Reviewed; recommend denial for the following reason:

_____

_____

☐ Need additional information to review. (Please list information required.)

_____

_____

☐ Meeting requested.
☐ Comments (Attach additional pages as needed.)

_____

_____

Signature _____ Date 08/25/22

## Melody Osborne

**From:** MOHS Kurt A <Kurt.A.MOHS@odot.oregon.gov>
**Sent:** Wednesday, August 24, 2022 4:28 PM
**To:** Melody Osborne
**Cc:** PRICE Ruth E
**Subject:** FW: Request for Agency Comment
**Attachments:** RFAC ODOT Rail.pdf; ZC-CMA 22-16, NSD Application Package.pdf

Melody,

After reviewing the attached document, ODOT Rail Crossing Section has no comments or concerns with the proposed zoning change.

Thanks for the opportunity to review the application.

Kurt

Kurt Mohs
Rail Crossing Compliance Specialist
ODOT Commerce and Compliance Division
(503) 551-0602
kurt.a.mohs@odot.oregon.gov

## Melody Osborne

**From:** Orozco, Rafael S CIV USARMY CENWP (USA) <Rafael.S.Orozco@usace.army.mil>
**Sent:** Thursday, August 25, 2022 2:39 PM
**To:** Melody Osborne
**Subject:** RE: Request for Agency Comment

Hello Melody,

If you are submitting an application for a construction permit, you can find the permit application (Joint Permit Application) and read about the process at the website below.

https://www.nwp.usace.army.mil/Missions/Regulatory/Apply/

Rafael Orozco
Regulatory Project Manager
US Army Corps of Engineers
Portland District, Regulatory Branch
Phone: 503-808-4959 | Cell 541-797-9262
Rafael.S.Orozco@usace.army.mil

---

**From:** Melody Osborne <Melody.Osborne@dundeecity.org>
**Sent:** Thursday, August 25, 2022 2:31 PM
**To:** Orozco, Rafael S CIV USARMY CENWP (USA) <Rafael.S.Orozco@usace.army.mil>
**Subject:** [Non-DoD Source] RE: Request for Agency Comment

Hi Rafael,

Thank you for the response. There will also be a site design application coming soon. Would you be the correct person to send that to? We believe there *may* be a wetland issue (we aren't sure).

Melody

---

**From:** Orozco, Rafael S CIV USARMY CENWP (USA) <Rafael.S.Orozco@usace.army.mil>
**Sent:** Thursday, August 25, 2022 2:16 PM
**To:** Melody Osborne <Melody.Osborne@dundeecity.org>
**Subject:** RE: Request for Agency Comment

Good Afternoon Melody,

I checked with other staff members here regarding the request for agency comment, and I was told we generally do not issue comments for these.

Rafael Orozco
Regulatory Project Manager
US Army Corps of Engineers
Portland District, Regulatory Branch
Phone: 503-808-4959 | Cell 541-797-9262
Rafael.S.Orozco@usace.army.mil

**From:** Melody Osborne <Melody.Osborne@dundeecity.org>
**Sent:** Wednesday, August 24, 2022 2:14 PM
**To:** Orozco, Rafael S CIV USARMY CENWP (USA) <Rafael.S.Orozco@usace.army.mil>
**Subject:** [Non-DoD Source] Request for Agency Comment

Good Afternoon, Rafael!

I am attaching a request for agency comment. I am not sure if you are the person that needs to review this, but I have been unable to locate the person we originally had as a contact. I fear he no longer works for the US Army Corp of Engineers.

If this should be sent to someone else please let me know. I appreciate the help.

Melody Osborne
Administrative Assistant
503-538-3922 ext. 0

## Melody Osborne

**From:** Albert, Scott <scott.albert@ziply.com>
**Sent:** Thursday, August 25, 2022 7:58 AM
**To:** Melody Osborne
**Cc:** Albert, Scott
**Subject:** RE: Request for Agency Comment
**Attachments:** RFAC Ziply.pdf; ZC-CMA 22-16 NSD Application Package.pdf

Good morning Melody:

Ziply Fiber – No conflict.

**Thank you!**
**Scott Albert**
**Network Engineer**
**Ziply Fiber**
**4155 SW Cedar Hills Blvd.**
**Beaverton, OR. 97005**
**Cell:503-207-8875**
**Office:503-526-3544**
**scott.albert@ziply.com**
**or.metro.engineering@ziply.com**

---

**From:** Melody Osborne <Melody.Osborne@dundeecity.org>
**Sent:** Wednesday, August 24, 2022 1:56 PM
**To:** Albert, Scott <scott.albert@ziply.com>
**Subject:** Request for Agency Comment

---

**WARNING: External email. Please verify sender before opening attachments or clicking on links.**

---

Hi Scott,

I've attached a request for Agency Comment for a zone change/comp map amendment in Dundee. The requested deadline is September 16.

Melody Osborne
Administrative Assistant
503-538-3922 ext. 0

Planning Department
PO Box 220
620 SW 5th Street
Dundee, Oregon 97115

CITY of DUNDEE Oregon

Doug Rux, City Planner
503-537-1212
503-538-1958 fax
Doug.Rux@newbergoregon.gov

RECEIVED
AUG 29 2022
CITY OF DUNDEE

# Request for Agency Comment

Date: August 24, 2022

To: Postmaster
Dundee Post Office

Request: **Zone Change and Comprehensive Map Change from Agricultural (A) to Public (P).** The proposal is to rezone 15.48-acres on the corner of SE 8th and SE Edwards Streets from Agricultural to Public for the future development of a new elementary school.

File No.: ZC/CMA 22-16
Applicant: Harper Houf Peterson Righellis, Inc.

The enclosed material has been referred to you for your information, review, and comment. If you wish to have your remarks on the enclosed material considered, please return this form by **September 16, 2022**.

Please note: If a comment is not received by the deadline indicated, the decision-making body will assume that there is no conflict between the request and the interests of your agency or organization and make its decision accordingly.

---

Please check the appropriate space below and provide any comments you wish in the space provided, or on additional sheets. Your prompt reply is greatly appreciated.

☐ Additional time needed for review. Expect comments by _____.
☒ Reviewed, no conflict.
☐ Reviewed; recommend denial for the following reason:

_____

_____

☐ Need additional information to review. (Please list information required.)

_____

_____

☐ Meeting requested.
☐ Comments (Attach additional pages as needed.)
Is there an address yet? I need to add the address to the AMS database as soon as we can.

Signature

8-29-2022
Date

## Doug Rux

**From:** Melody Osborne <Melody.Osborne@dundeecity.org>
**Sent:** Tuesday, September 27, 2022 10:36 AM
**To:** Doug Rux
**Subject:** FW: Request for Agency Comment

**Importance:** High

This email originated from outside the City of Newberg's organization. Do not click links or open attachments unless you recognize the sender and know the content is safe.

Doug,

Please see the comment from the City Engineer below.

Melody

---

**From:** City Engineer <city.engineer@dundeecity.org>
**Sent:** Thursday, September 22, 2022 5:38 PM
**To:** Melody Osborne <Melody.Osborne@dundeecity.org>
**Cc:** Steve Dahl <Steve.Dahl@dundeecity.org>
**Subject:** RE: Request for Agency Comment

Melody,
I have the following comment.

I do not have a conflict with the zone change but I do not agree with the traffic study's determination that no significant impact will result from the placement of the school at this location. Further evaluation of the driveways and loading/unloading zones will be needed during the design review for the school. Local streets in this area will be impacted and traffic flow needs to be further evaluated. The City has already received comments from concerned residents in this area.

Let me know if you have any questions. I am available to discuss on Monday. Will not have reception tomorrow.

Thank you,

Greg Reid
City Engineer
City of Dundee
503-577-0493

---

**From:** Melody Osborne
**Sent:** Wednesday, August 24, 2022 1:56 PM
**To:** City Engineer <city.engineer@dundeecity.org>
**Subject:** Request for Agency Comment

Greg,

I've attached a request for Agency Comment for a zone change/comp map amendment in Dundee. The requested deadline is September 16.

Melody Osborne
Administrative Assistant
503-538-3922 ext. 0

Riverside District Master Plan Update

The Riverside District Master Plan was adopted in 2011 following considerable community input including a committee made up of stakeholders comprising of owners, agencies (CPRD, ODOT, School District, City of Dundee), developer representation, and Dundee citizens. The Plan established policies guiding the development of the Riverside District area that provides for diversed housing types with higher densities, parks and recreation facilities to adquately serve the new population, and lands for commercial and light industrial development providing shopping convenience and jobs. The theme of the process was to create a viable and unique community in the Riverside District area. Some of the unique features in the Plan include the use of "green seams" (a 30-foot wide strip located around the perimeter of the Plan area and next to the Bypass that may be used for pathways and storm water conveyance) and the concept of multi-use paths (bike/ped) that connect the three distinct neighborhoods separated by the Bypass and the municipal wastewater treatment plant, along with connections to the proposed three neighborhood parks.

In 2018, again with representation from stakeholders, recommended amendments to the Dundee Development Code that would establish Riverside zoning districts, development standards, processes for developing the Riverside District area, and specific standards for location and development of the neighborhood parks and multi-use pathways. The recommendation also provided much greater flexibility in the overall residential density, including the conversion of up to one half of the commercial lands in subarea A to be exclusively residential, along with mixed residential use in the commercial uses. However, due to concerns expressed by City Attorney Ramis at the hearing before Council, the Planning Commission's recommendations for the Code amendments were "accepted" and not adopted pending resolution of certain infrastructure uncertainties. This was mainly an issue of future water supply, but it also dealt with the uncertainty on how neighborhood parks would be developed, owned and maintained.

Shortly after 2018 the School District completed its process of engaging the community in developing recommendations for use of bonded proceeds for financing a variety of improvements to District facilities. The single largest project would be the construction of a new Dundee elementary school. The District looked at constructing the new school at the current location or on property owned by the District that was developed as part of Billick Park. Council expressed its preference for preserving Billick Park and supported the idea of locating a new elementary school in subarea C of the Riverside District. While this approach would benefit both the City and the District, a key consideration shared by City staff to the District Developement team was to ensure that the intent of the multi-use path system interconnecting parks and neighborhoods be retained. Specifically, staff proposed that a multi-use path be placed on the perimeter of subarea C (edge of the school property) that would have direct connection to Edwards Road and Eight Street (Dundee Landing Road). The District was tasked with proposing amendments along with supporting findings to update the Riverside District Plan.

The uses in subarea C (page 13 of the Riverside District Plan) are proposed to be amended to reflect the location of the new elementary school. However, since the zoning is proposed to be Public the development application for the school will not be subject to the "accepted" Code amendments intended for the implentation of the Riverside District Plan (even if the "accepted" Code amendments were to be adopted) and may result in ambiquity with respect to a neighborhood park serving subarea A and the alignment of the multi-use path. I recommend the removal of that ambiguity to include the following language in Subarea C: "A multi-use path shall be located next to the Bypass right of way and along the permiter of Subarea C not abutting public right of way and connect to the Edwards Road public right of way and Eight Street public right of way." This will

ensure subarea A will be connected to the other residential neighborhoods as anticipated in the Riverside District Plan and will provide a significant recreation facility for East Dundee residents.

While the multi-path should be in a tract dedicated to the City of Dundee for that purpose, how its constrction will be financed was not yet determined. In 2018 staff was looking into the possibility of this being a City responsibility with the imposition of a new system development charge and State grants. Alternatively, its construction would have been part of development agreement (as recomended by the city attorney) between interested parties including the City of Dundee and property owner. Note: the development agreement would normally be a prerequisite for an owner of a subarea to get zoning and the "accepted" Code amendment adopted.

Regarding the language proposed by the District that the "school site may function in part to meet park needs during non-school hours" while a nice gesture it will obscure the requirements of subarea A. Originally subarea A and subarea C were to share one neighborhood park. Subarea A had a target density of 100 units in the 2011 Plan, however, with the additional flexibility in density and the ability to convert up to 50% of the commercial land in subarea to residential uses, the actual number of housing units may be much greater. Since the existing Fortune Park is too small (using the proposed "accepted" standards), subarea A will need to provide park land and facilities to meet the needs of this new population. (Note: the "accepted" standards will require over an acre of park for 150 residential units). To clarify the need for a fully accessible neighborhood park to serve subarea A, I recommend amending section 1 of Parks, Open Space and Trail (page 19) of the Riverside District Master Plan to replace subarea C with subarea A for the establishment of neighborhood parks. Note: Figure 1 – Riverside District Land Uses shows a "Potential Open Space" in Subarea A that appears to meet the "accepted" park requirements for size (1 acre), locations (200 feet from the Bypass), and access (abuts a minimum of two public streets).

Since these recommended changes may require additional staff review to ensure no other conflicts and may require possible updates to the findings, I suggest following closure of the public hearing and deliberations that Council direct staff to make the recommended changes to the proposed text amendments and have them brought back for adoption at the next council meeting.

Rob Daykin
720 SW Scotsman Court
November 15, 2022

## Attachment 2: Aerial Map

## Attachment 3: Current Zoning Map

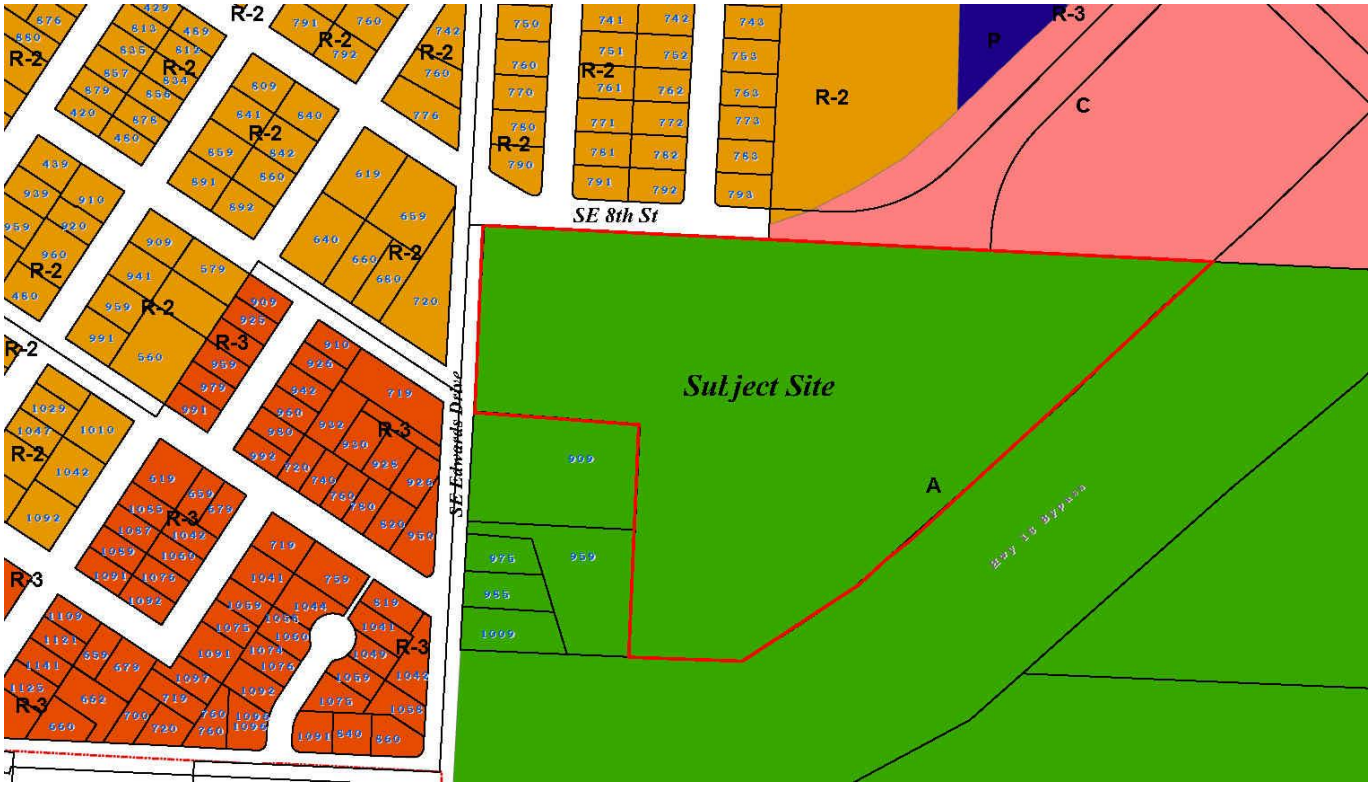

**Attachment 4: Riverside Master Plan**
**& Comprehensive Plan**
**Track Changes**

Figure 1 - Riverside District Land Uses (Amended December 2022)

# Attachment 4

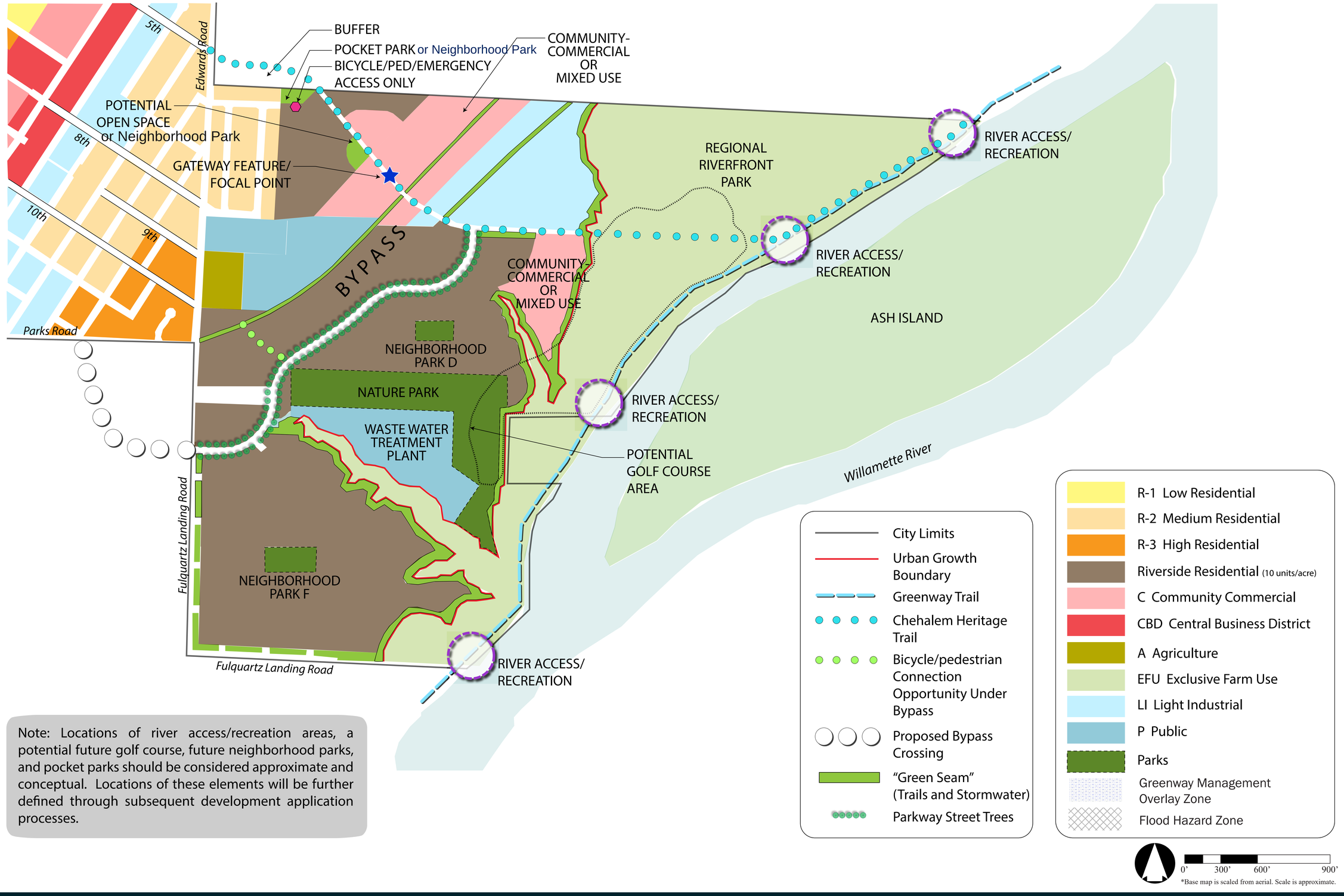


Note: Locations of river access/recreation areas, a potential future golf course, future neighborhood parks, and pocket parks should be considered approximate and conceptual. Locations of these elements will be further defined through subsequent development application processes.

- The acreage designated for Commercial (14 acres) and Light Industrial (13 acres) uses in the Master Plan is generally consistent with the zone change approved for the Edwards property in 2008. The Master Plan identifies one additional area for Commercial or Mixed Use (8 acres) in Subarea D that is currently in the Agriculture holding zone.

General land uses for each subarea are described below and illustrated on Figures 1 and 2 on the following pages. The allocation of housing units and non-residential floor area by subarea is shown in Table 2.

**Subarea A**, located west of the Bypass corridor and north of 8th Street, includes a mix of planned commercial and residential uses along with pocket parks. The land uses in Subarea A are generally consistent with the uses approved as part of the 2008 zone change for River Farms, LLC, with some refinements in the location of certain uses. General land use categories for Subarea A are summarized below.

- Permitted residential uses include a mix of single-family detached units on relatively small lots, single-family attached units (e.g., townhouses or rowhouses) and some multi-family uses. Lower density residential uses are planned at the west edge of Subarea A for compatibility with adjacent development. A broader mix of housing types and higher densities are accommodated in the central portion of the Subarea. The Master Plan targets development of up to 110 residential units in Subarea A.
- Commercial and Mixed uses are located in the easterly portion of Subarea A, abutting the Bypass and higher density residential uses. The commercial use category accommodates a variety of retail, service and office uses. Drive-through facilities will be prohibited to foster a village scale. The Riverside District Zone may limit the footprint of individual buildings, require conditional use approval for buildings over a certain size (such as 10,000 or 20,000 square feet) and impose design standards. The Commercial and Mixed Use areas will provide flexibility for vertical and horizontal mixed use, including upper story residential or office over ground floor commercial and live/work units. The Master Plan allows development of up to approximately 147,000 square feet of non-residential floor area in Subarea A, assuming typical floor area ratios for commercial development. The actual amount and scale of commercial development may be lower, based largely on market demand.

The Master Plan identifies the location of a neighborhood park in Subarea A. The Park location is based on neighborhood park size and location from the Dundee Parks and Open Space Plan. The size and location of the neighborhood park is conceptual, and the precise location and size will be determined as part of a future development application process.

**Subarea B**, located east of the Bypass corridor and north of 8th Street, is designated for light industrial use. Permitted uses in this area include food and beverage production and sales activities, which could include a "Vintner's Village" of independent wine production and tasting facilities and indoor and outdoor event space. Other permitted uses include eating and drinking facilities. The Master Plan envisions that uses in Subarea B will have a synergy with tourist, open space and recreational uses that take advantage of the riverside location east of the Bypass. The Master Plan allows development of up to 204,000 square feet of non-residential floor area in Subarea B, assuming typical floor area ratios for this type of development. The actual amount and scale of development in Subarea B may be lower, based largely on market demand.

**Subarea C**, located west of the Bypass corridor and south of 8th Street, is designated for public uses. This area is anticipated to be the location of a new elementary school. The school site may function in part to meet park needs during non-school hours. Preservation of the specimen Oak trees located in Subarea C will need to be factored into any development of the area for public uses. A multi-use path shall be located next to the Bypass and along the perimeter of Subarea C not abutting public right-of-way and connect to the SE Edwards Drive public right-of-way and SE 8th Street public right-of-way.

~~residential uses and a neighborhood park. Permitted residential uses include a mix of single-family detached units on standard and small lots, single-family attached units (e.g., townhouses or rowhouses) and some multi-family uses. Lower density residential uses are planned at the west edge of Subarea C for compatibility with adjacent development. Residential densities are higher closer to the Bypass. The Master Plan targets development of up to 64 residential units in Subarea C.~~

~~The Master Plan identifies the location of a neighborhood park in Subarea C that will be dedicated with~~

~~development. The park location reflects the amenity value of specimen Oak trees and is based on neighborhood park size and location criteria from the Dundee Parks and Open Space Plan. The size and location of the neighborhood park is conceptual and the precise location and size will be determined as part of a future development application process.~~.

overall development and open space vision of the Master Plan. Additionally, Yamhill County has recommended a UGB amendment that would accommodate the uses shown in the master plan and remove the on-going confusion regarding land use jurisdiction.

The following table summarizes projected acres of development by land use type, as well as target dwelling units, and square footage of retail, commercial, and industrial development for the Riverside District.

***Table 1 – Riverside District Land Uses***

| Locations/Designations | Acres | Percent[1] | Target Dwelling Units[3] | Maximum Floor Area of Development[4] |
|---|---|---|---|---|
| Inside urban growth boundary (UGB) | | | | |
| Residential | ~~100~~85 | ~~38~~32% | ~~970~~ 906 | |
| Commercial | 22 | 8% | | 239,000 |
| Light Industrial | 13 | 5% | | 204,000 |
| Public | 15 | 6% | | |
| *Subtotal* | *135* | *51%* | *~~970~~ 906* | *443,000* |
| Neighborhood Park | 8 | 3% | | |
| Nature Park | 24 | 10% | | |
| Roads (excluding Bypass) | 29 | 11% | | |
| Trails/green seams | 23 | 9% | | |
| Newberg Dundee Bypass corridor | 27 | 10% | | |
| Wastewater treatment plant[2] | 17 | 7% | | |
| *Subtotal (Inside UGB)* | *263* | *73%* | | |
| Outside UGB (open space or recreation) | 97 | 27% | | |
| **Total Planning Area** | **360** | **100%** | **~~970~~ 906** | **443,000** |

Notes

1. Percentages are as a total of land within the UGB except the Subtotal and land outside the UGB.

2. A small portion of the treatment plant acreage reflected in this number is outside the UGB; acreage does not include potential turtle habitat areas south of Lagoon #4 (Canyon Lake)

3. Assumes a mix of housing types and an overall average density of about 10 units/acre.

4. Assumes floor area ratios of 0.25 for commercial and mixed use and 0.35 light industrial and hotel uses.

***Table 2 – Target Dwelling Units and Non-Residential Floor Area by Subarea and Land Use***

| Subarea | Land Use Designation | Acres | Target Dwelling Units | Max. Non-Residential Floor Area |
|---|---|---|---|---|
| A | Commercial | 14 | 14 | 147,500 |
| A | Residential | 13 | 96 | NA |
| B | Light Industrial | 13 | NA | 204,000 |
| C | Public ~~Residential~~ | 11 | ~~64~~NA | NA |
| D | Commercial/Mixed Use | 8 | NA | 91,500 |
| D | Residential | 23 | 277 | NA |
| E | Public | 41[1] | NA | NA |
| F | Residential | 53 | 519 | NA |
| G | Agricultural, Open Space and Recreation | 97 | NA | NA |
| **TOTAL** | | **273[2]** | **~~970~~906** | **443,000** |

Notes

1. Acreage includes approximate area of WWTP and planned Nature Park

2. This total does not include the area estimated for neighborhood parks, trails, roads and the Bypass corridor, shown in Table 1.

## B. Riverside District Policies

After the adoption and implementation of a new Riverside District Zone, the following policies will apply to Planning Commission review and approval of detailed master plan(s) and subdivision(s) of individual or consolidated subareas within the Riverside Master Plan District. The detailed master plan and subdivision reviews will be key steps in setting the stage for specific development of each subarea because they will:

- Establish and dedicate the local street system;
- Identify the specific location and size of neighborhood park(s) identified in the Master Plan and dedicate the planned park(s) in conjunction with the subdivision;
- Confirm that the number of residential lots is consistent with the overall target residential units;
- Layout infrastructure (particularly water and sewer) to accommodate the proposed subdivision and identify improvements needed to assure adequate public facilities; and
- Include a simple traffic analysis to assess the trips and required transportation improvements based on the overall transportation analysis completed for the Master Plan.

The policies will also apply to discretionary review of conditional uses, site design review and amendments of the Riverside District Master Plan. However, the policies will not apply to the review of individual building permits for development on platted lots that is consistent with the use tables and design standards of the Riverside District Zone once it is adopted.

### *Land Use*

As shown in Figure 1, the Riverside District Master Plan envisions the long-term development of a cohesive district that includes a mix of land uses and housing types served by an interconnected of "complete" streets

with planter strips, street trees and sidewalks. A substantial portion of the Riverside District will be devoted to park, open space and a trail network that will serve both the Riverside District and the larger community and provide a unique amenity for development. Non-residential development is targeted to the northerly 1/3 of the Riverside District. It is envisioned that commercial uses to the west of the Bypass will be smaller-scale neighborhood commercial uses. Non-residential uses to the east of the Bypass are envisioned to be larger-scale "destination" uses such as wineries, event facilities, hotel, restaurants and related uses.

1. The Riverside District Master Plan identifies the approximate location and acres of general land use categories by subarea (See Figure 2 and Table 2). Through the detailed master plan and subdivision process, the applicant shall have the ability to propose minor changes between the boundaries of the use areas, consistent with the overall target housing units and non-residential floor area allocated to the subarea.
2. When a partition or subdivision application is submitted for a subarea, even if it only includes a smaller first phase of development, a detailed master plan shall be submitted for the entire subarea to show the layout of streets and more precise location of the neighborhood park (if a conceptual location is shown on the approved Master Plan for the Subarea). The detailed master plan will provide the tool to track the target housing units and maximum non-residential floor area consistent with the allocations by subarea in Table 2.
3. A mixture of different building types is encouraged within the residential areas (e.g. single family residential, duplex, attached single family residential, multi-family). Outside of the overall target number of housing units specific for each subarea, it is expected that the Riverside District Zone will provide broad flexibility for a mix of housing types and lot sizes. The detailed master plan shall identify lots intended for attached and multifamily housing. To ensure efficient use of land in the Riverside District, an average density of 10 units per acre is established. Lot sizes may be averaged and densities may be shifted between subareas to provide flexibility to meet changing housing and market needs.
4. Development within subareas designated for commercial, mixed use and light industrial uses in Subareas A, B and D shall be consistent with the standards included in the Riverside District Zone (when adopted), including limitations on certain uses, maximum building size and basic design standards.
5. The approved Master Plan assumed certain categories of commercial and light industrial uses would be appropriate in the Riverside District. While the Riverside District Zone will provide some flexibility for the City to allow "similar uses" through a Type I-B review, a major change in the list of permitted and conditional uses will require Type II Planning Commission approval or a Type IV Development Code text amendment.
6. The Master Plan identifies a conceptual location for a potential golf course. While a golf course is considered an appropriate use in the Riverside District, conditional use approval is required to review the layout of the golf course relative to public trails and access to the riverfront. Additionally, conditional use approval is required for any portion of the golf course located within Dundee's Exclusive Farm Use (EFU) zone. Through the conditional use review process, the City shall also encourage the use of recycled wastewater or on-site water sources for golf course irrigation to avoid pressure on the City's domestic water supply sources. Based on input from the Department of Land Conservation and Development, development of a golf course on Dundee's designated EFU land may require a goal exception or UGB amendment.
7. The City will support a future UGB amendment application to include Subarea G within Dundee's UGB to accommodate the open space and recreational uses identified in the Riverside Master Plan. The location of this subarea inside of the city limits but outside of the UGB complicates land use jurisdiction.
8. If the School District identifies a need for future school(s) within the Master Plan area, appropriate site(s) shall be identified consistent with the policies of the Dundee Comprehensive Plan and/or School District Facility Plan.
9. The Riverside District Master Plan does not designate potential school sites and the transportation analysis

**Formatted:** Indent: Left: 0.34"

~~9. The Riverside District Master Plan does not designate potential school sites and the transportation analysis~~ did not assume development of a school in any of the subareas. At a minimum, development of a public school within the Riverside District would require conditional use approval and a full traffic analysis. A school in a Public zone is a permitted use.

## *Transportation*

The main elements of the Riverside District transportation system are shown in Figure 3. This figure shows the approximate location of the two overcrossings of the Bypass that will be built by ODOT. The approximate location of the "Parkway Collector" is also shown to the east side of the Bypass. The local street system for the Riverside District will be defined as part of subsequent land use applications, based on established code standards for street connectivity and maximum block length.

1. The Riverside District Master Plan accommodates the development of the Bypass in the location shown in the Tier 2 Draft Environmental Impact Statement (Tier 2 DEIS) and the Dundee TSP. ODOT shall acquire all right-of-way needed for the Bypass and the overcrossings and construct the facilities.
2. The City and the affected property owners will continue to coordinate with ODOT on the location and design details for the overcrossings and landscaping of the berms. The City will advocate for a design that maximizes the developable area in the Riverfront District and reduces the visual impact of the Bypass.
3. An interconnected street system shall be provided within and between residential, commercial, and mixed use areas. Because local streets may be extended on an incremental basis in some subareas, it may be necessary to accept temporary dead-ends or "stub streets" that will be extended when future development occurs.
4. All streets shall be built to established standards for street connectivity and block length as set forth in Chapter 2.202 of the Development Code. Street standards in the Riverside District Zone shall supersede TSP or Development Code standards where they conflict.
5. The collector to the east side of the Bypass shall be developed to a "parkway" standard to integrate the subareas and help establish the overall design character of the Riverside District. In addition to providing internal connections east of the Bypass, construction of this road will ensure that all subareas east of the Bypass would have two ways to cross the Bypass, which is important for safety and emergency service reasons.
6. Street trees shall be required in all subareas of the Riverside District. Street trees shall be installed and maintained to the standards specified in the Development Code.
7. No private streets shall be allowed in the Riverside District.
8. Developers will be allowed and encouraged to construct green street features on local and collector streets to reduce the amount of stormwater entering local rivers and streams, reduce demand on the city's infrastructure and improve water quality. Modifications to street standards will be allowed without a variance at the subdivision phase if a developer proposes green street features that are approved by the City Engineer and Planning Commission.
9. Where cul-de-sacs are constructed, they shall comply with the maximum length standards in Section 2.202 of the City of Dundee Development Code. A pedestrian and bicycle connection may be required between the end of the cul-de-sac and the nearest local street to provide connectivity.
10. Sidewalks shall be provided along both sides of all streets. Where a wider multi-use path is provided (for example, on the side of the Parkway Collector adjacent to the Bypass or on the urban side of the Fulquartz Landing Road frontage), the multi-use path shall replace the required sidewalk.
11. A pedestrian/bicycle pathway shall be accommodated under the Bypass structure located near 10th Street to provide an ADA accessible connection between Dundee and the Riverside District. The City of Dundee may

pursue grants to fund construction of this undercrossing. ODOT has committed that the Bypass design will accommodate the pedestrian/bicycle pathway.

## Water, Wastewater and Stormwater

Water, wastewater and stormwater facilities that are needed to support proposed development in the Riverside District will require further planning of needed improvements, updates of city system development charges (SDCs) and other fees, and coordination between the city and property owners regarding the timing and funding of infrastructure improvements. The types of improvements required to serve the Riverside District are described in more detail in the Land Use Alternatives Report in Appendix B7 and the Cost Estimates, Funding Strategies and Responsibilities document Appendix B9 (adopted by reference).

1. Public facilities for the Riverside District shall be planned, designed and constructed in accordance with adopted Public Facility Master Plans for water, wastewater and stormwater.
2. Each subdivision or development application shall show that its water, wastewater and stormwater requirements can be met adequately by infrastructure that is in place or will be in place at the time of occupancy. The City Engineer shall review and confirm the adequacy of infrastructure plans prior to City approval of the land use application. As a general policy, the City requires that developers bear the cost of infrastructure improvements required to support their project.
3. As authorized by ORS 94.504, the City may require City Council approval of Development Agreements as a condition of subdivision or development application approval to allow the city and an applicant to coordinate in the provision of facilities to serve the development. The Development Agreement may require specific performance conditions for development of the property. These performance conditions may include, but are not limited to, construction of public facilities, dedication or reservation of land for right-of-ways, easements, or parks, or other conditions proper for the development.
4. Planning for water use should incorporate techniques and systems for water reuse and conservation to the greatest degree practical, including potential reuse of wastewater for irrigation or other purposes.
5. The City will encourage natural stormwater drainage systems designed to manage and filter as much stormwater on site as reasonably possible and to incorporate natural drainage and management techniques. Examples and illustrations of low impact development approaches that may be appropriate in the Riverside District are included in the Background Conditions Report, Charrette Report, and Land Use Alternatives Report in Appendix B.

## Parks, Open Space and Trails

Figure 1 illustrates the park and open space framework for the Riverside District, including planned neighborhood parks, a regional riverside park, a nature park, and a connected trail system to access the river and connect the various subareas. Figure 6 highlights natural resource and riparian areas and identifies the general location of the riparian buffer (50 foot width) and green seam buffer (30 foot width).

1. A minimum of three neighborhood parks shall be established within Subareas A ~~C~~, D, and F as shown in Figures 1 and 2 of the Riverside District Master Plan and based on the housing target of ~~970~~ 906 dwelling units. The specific location and size of each neighborhood park shall be refined through the detailed master plan and subdivision process. However, each neighborhood park site shall be consistent with the location and size criteria in the adopted Dundee Parks and Open Space Master Plan and the Neighborhood park sites shall be developed in accordance with the provisions of the Parks and Open Space Zone (Chapter 17.203.130~~2.111~~) of the Development Code. The City shall collaborate with Chehalem Parks and Recreation District (e.g. IGA) on Riverside District park and trail issues such as dedication, improvements, standards, maintenance, etc.

The following tables summarize the assumptions and analysis used to estimate thresholds for needed transportation improvements within and outside the study area. Proposed land uses have been translated into total numbers of trips by subarea or a combination of subareas. These trips have in turn been distributed and assigned to the study area roadways.

***Table 3 – Riverside District Land Uses by Subarea***

| Land Use | Subarea A | Subarea B | Subarea C | Subarea D | Subarea E | Subarea F | Subarea G | Total |
|---|---|---|---|---|---|---|---|---|
| Single family residential (units) | 96 | 0 | ~~24~~ 0 | 222 | 0 | 415 | 0 | ~~757~~733 |
| Multifamily residential (units) | 14 | 0 | ~~40~~ 0 | 55 | 0 | 104 | 0 | ~~213~~173 |
| Commercial and retail (sq ft) | 131,500[5] | 0 | 0 | 91,500[3] | 0 | 0 | 0 | 223,000 |
| Public (sq ft) | 0 | 0 | 51,000 | 0 | 0 | 0 | 0 | 51,000 |
| Golf course[4] (holes) | 0 | 0 | 0 | 9 | 0 | 0 | 0 | N/A |
| Light industrial[2] (sq ft) | 0 | 204,000 | 0 | 0 | 0 | 0 | 0 | 204,000 |
| Neighborhood park (acres) | 4 | 0 | 0 | 2 | 0 | 2 | 0 | 8 |
| Regional & nature park (acres) | 0 | 0 | 0 | 0 | 25 | 0 | 30 | 55 |

[1] Golf course includes 9-holes and a club house/pro shop.
[2] Light Industrial includes wine tasting and production.
[3] Overall square-footage includes 50 hotel rooms.
[4] The clubhouse is located in Subarea D.
[5] The 14 multifamily residential units represent the remaining 16,000 square-feet of commercial and retail space shown in Table 2 above.

# Appendix A

Comprehensive Plan Amendments – New Riverside District Chapter
(Amended December 2022)

RIVERSIDE DISTRICT

GOAL: Adopt a new Riverside District comprehensive plan designation and master plan to provide a land use and transportation framework to guide long-term development of the Riverside District.

OBJECTIVES

1. Apply a new Riverside District comprehensive plan designation to the approximately 360 acre planning area within the city limits shown in Figure 1.

2. Adopt the Riverside District Master Plan (June 2011) and amended November 2022 by reference as a support document to the Dundee Comprehensive Plan.

3. Adopt comprehensive plan policies specific to the Riverside District.

4. Recognize that adoption of the comprehensive plan framework (text and map amendments) represents the first steps in a multi-step process required prior to development. Future actions will include, but not be limited to:

    - Preparation of more detailed infrastructure and financial plans to assure adequate public facilities and services to support the master plan;

    - Development Code text amendment to adopt new Riverside District Zone;

    - Zone Change(s) to apply the new Riverside District Zone;

    - Detailed master plans (by subarea) to establish local street network, identify specific park sites and trail connections, lay out blocks, refine mix of land uses and set range of densities, mix of housing types and lot sizes, establish phasing schedule, etc.

    - Subdivision(s) to divide land in accordance with detailed master plans; dedicate local streets, parks and trail and utility easements; install public and private improvements, etc.

    - Potential site design review for non-residential buildings, unless clear and objective design standards are adopted as part of the detailed master plan for a particular subarea.

EXISTING CONDITIONS

The Riverside District was annexed to the City of Dundee in 1969, prior to adoption of Senate Bill 100 and Oregon's statewide planning program. When the Dundee Comprehensive Plan was adopted in 1977, the majority of the Master Plan area was included in Dundee's Urban Growth Boundary (UGB). The city applied an Agriculture (A) holding zone to approximately 235 acres within the UGB and plan policies called for incremental rezoning of the agricultural land for residential use based on need.

Agricultural and undeveloped lands on the lower terrace near the Willamette River were not included in the 1977 UGB. The city applied an Exclusive Farm Use (EFU) zone to preserve approximately 125 acres within the city limits for farm uses.

The Riverside District is still largely undeveloped, with the exception of the wastewater treatment plant and a few single family dwellings. In 2008, Dundee City Council re-zoned about 54 acres in the northerly portion of the Riverside District from the Agriculture holding zone to a mix of residential (R-2 and R-3), commercial (CC) and light industrial (LI) zones. Conditions were attached to the zone change approval to limit certain uses, require submittal and approval of a master plan and assure adequate public facilities prior to development of the subject property. During the zone change process, the City Council expressed interest in using the master planning process to ensure integrated planning and development of the entire Riverside District instead of piecemeal rezoning.

Plans for the Newberg-Dundee Bypass also have significant implications for development in the Riverside District. After a lengthy federal environmental review process, Yamhill County and the cities of Newberg, Dundee and Dayton all approved the Bypass alignment and adopted comprehensive plan policies to support the Bypass. The Bypass alignment fragments the Riverside District. The Bypass will have full access control and ODOT will build two overcrossings in the vicinity of 8th Street and Fulquartz Landing Road/Parks Drive to provide connectivity across the Bypass and maintain access to the Willamette River.

The master plan document summarizes background information and existing conditions for the Riverside District planning area. A Background Conditions Report (August 2010) provides more detailed information on existing conditions.

FINDINGS OF FACT

The Riverside District encompasses the majority of the city's buildable land inventory. The City of Dundee initiated the master planning process in 2010 to provide a more detailed land use and transportation plan to guide coordinated development of this special area. The project was

funded by a grant from the Oregon Department of Transportation and Growth Management (TGM) Program.

The Riverside District features a number of unique assets and opportunities:

- A relatively small number of property owners and large parcels of undeveloped land, making master planning easier;
- A prime location along the Willamette River, with outstanding views of the river and surrounding areas in addition to access to water-based recreation;
- Natural resources that provide intrinsic natural values as well as amenities to future residents and visitors; and
- Community support for the master planning process.

The Riverside District master plan reflects substantial input from the public involvement process, including opportunities for on-going coordination with the major property owners. A key step in the planning process was a design charrette, held October 10-14, 2010, to identify land use and transportation plan alternatives for the Riverside District. A market study and a transportation analysis informed the selection of the preferred alternative.

A preliminary, planning-level analysis of public facilities and services needed to implement the preferred alternative was prepared and included in the Land Use Alternatives Report. However, that report was very clear that more analysis of costs and financing mechanisms and responsibilities will need to be conducted to implement the master plan.

On March 31, 2011, Murray, Smith & Associates, Inc. (MSA) presented a memorandum to the City Administrator to provide an estimate of the available capacity of the City of Dundee's existing water supply sources to serve additional development within the City's Urban Growth Boundary (UGB). The memorandum clearly documented the severity of the constraints on the existing water supply.

Following consideration of the water supply issue, the City decided to proceed with the first steps in the planning process (adoption of the Riverside District plan designation and this Comprehensive Plan chapter) and defer adoption of the Riverside District Zone and rezoning land in the Riverside District until adequate public facilities and services can be assured.

POLICIES

1. The policies in this Riverside District chapter shall replace and supersede any policies in the Dundee Comprehensive Plan that relate to the area within the new Riverside District plan designation.

2. The City will identify the boundaries of the Riverside District plan designation on the Comprehensive Plan Map as shown in Figure 1.

3. The City will retain existing zoning that applies within the Riverside District plan designation. Existing zoning shall be considered consistent with the Riverside District plan designation because existing zones allow less intensive, lower density development than anticipated in the Riverside District Master Plan. Uses and development allowed under existing zoning regulations will be allowed, consistent with the provisions of the Dundee Development Code, statewide administrative rules and statutes, all of these policies, and any conditions of prior zoning and development approvals.

4. The waterfront uses are integral to and needed to support the overall development and open space vision of the Master Plan. The City will support the concept of expanding the UGB to coincide with the existing city limits and provide more appropriate zoning to accommodate the urban park, open space and recreational uses identified in the Riverside District Master Plan.

5. The City will adopt the Riverside District Master Plan (June 2011) and as amended November 2022) by reference as a supporting document to the Dundee Comprehensive Plan. The Master Plan is intended to identify a coordinated mix of residential, commercial, public, tourism and open space and recreational uses that are cohesive and connected with Dundee's larger community vision. The Master Plan includes additional policies that will be applicable to review and approval of future zone changes, detailed master plans and subdivisions within the Riverside District.

6. Because the Master Plan is considered a concept document, the City will consider refinements to the location and arrangement of land uses and other aspects of the Master Plan prior to or in coordination with implementation of Riverside District zoning. Any changes to the concept Master Plan must include the following limitations and components:

    - A maximum of 22 acres designated for Commercial uses.

    - A maximum of 13 acres designated for Light Industrial uses.

- A mix of housing types and densities, with a target of ~~970~~ 906 units in the Riverside District.

- In areas where the Riverside District is adjacent to developed, lower density residential areas, the development standards of the lower density zone (maximum heights and setbacks) shall apply to new housing on abutting lots in the Riverside District.

- Neighborhood park sites shall be required based on the target of ~~970~~ 906 dwelling units according to the standards of the Dundee Parks and Open Space Plan.

- A connected trail system shall be required to accommodate the Willamette River Trail, the Chehalem Heritage Trail, and connecting local trails within the Riverside District that link to the larger community trail system.

- Cross-sections for trail improvements shall accommodate linear stormwater quality facilities, particularly along the top of the bluff.

- A connected local street system with cross-sections specified to encourage sidewalks, planter strips, and street trees. Blocks shall not exceed a maximum length of 400 feet in commercial areas or 600 feet in residential areas.

- A parkway collector shall be required to provide a north-south link of development subareas to the east of the Bypass and connections to the two Bypass overcrossings. The cross-section for the parkway collector shall be consistent with the standards in the Dundee TSP.

- Riparian corridors shall be protected with a minimum 50-foot setback from the top of bank elevation.

7. Planning for water use should incorporate techniques and systems (e.g. “purple pipe”) for water reuse and conservation to the greatest degree practical, including potential reuse of wastewater for irrigation or other purposes.

8. All development within the Riverside District shall be adequately supported by the required facilities and services, including parks, schools, transportation, water, stormwater and wastewater infrastructure. Implementing ordinances shall provide that:

    - Required facilities and services must be available concurrent with development; and

- No implementing zoning map amendment may be granted except upon a finding that all required facilities and services are available, or can be made available, concurrent with development.

IMPLEMENTATION

The Riverside District Master Plan includes an Action Chart that identifies implementation action issues that will need to be addressed by the city, property owners, and/or other local and state agencies and stakeholder to support development of the Riverside District. The Action Chart does not reflect City budget commitments but is intended to highlight the scope of some of the action items.

Table 5 shows the estimated weekday p.m. peak hour trips generated by each land use within subareas.

***Table 5 – Estimated Riverside District Trip Generation – Weekday PM Peak Hour***

| Land Use | Subareas A | | | Subarea B | | | Subarea C | | | Subarea D | | | Subarea F | | | Total | | |
|---|---|---|---|---|---|---|---|---|---|---|---|---|---|---|---|---|---|---|
| | In | Out | Total | In | Out | Total | In | Out | Total | In | Out | Total | In | Out | Total | In | Out | Total |
| Single family residential | 67 | 39 | 106 | 0 | 0 | 0 | 0 ~~16~~ | 0 ~~10~~ | 0 ~~26~~ | 154 | 90 | 244 | 288 | 169 | 457 | ~~525~~ 509 | ~~308~~ 298 | ~~833~~ 807 |
| Multifamily residential | 7 | 4 | 11 | 0 | 0 | 0 | 0 ~~21~~ | 0 ~~10~~ | 0 ~~31~~ | 29 | 14 | 43 | 54 | 27 | 81 | 90 ~~111~~ | 45 ~~55~~ | 135 ~~166~~ |
| Elementary School (350 students) | 0 | 0 | 0 | 0 | 0 | 0 | 29 | 31 | 60 | 0 | 0 | 0 | 0 | 0 | 0 | 29 | 31 | 60 |
| Hotel use | 0 | 0 | 0 | 0 | 0 | 0 | 0 | 0 | 0 | 16 | 14 | 30 | 0 | 0 | 0 | 16 | 14 | 30 |
| Commercial and retail | 269 | 280 | 549 | 0 | 0 | 0 | 0 | 0 | 0 | 28 | 29 | 57 | 0 | 0 | 0 | 297 | 309 | 606 |
| *- Internal* | *(110)* | *(110)* | *(220)* | *0* | *0* | *0* | *0* | *0* | *0* | *(11)* | *(11)* | *(22)* | *0* | *0* | *0* | *(121)* | *(121)* | *(242)* |
| *- Pass by* | *(16)* | *(16)* | *(32)* | *0* | *0* | *0* | *0* | *0* | *0* | *(2)* | *(2)* | *(4)* | *0* | *0* | *0* | *(18)* | *(18)* | *(36)* |
| Golf course[1] | 0 | 0 | 0 | 0 | 0 | 0 | 0 | 0 | 0 | 11 | 14 | 25 | 0 | 0 | 0 | 11 | 14 | 25 |
| Light industrial[2] | 0 | 0 | 0 | 12 | 87 | 99 | 0 | 0 | 0 | 0 | 0 | 0 | 0 | 0 | 0 | 12 | 87 | 99 |
| Neighborhood parks | 1 | 2 | 3 | 0 | 0 | 0 | 0 | 0 | 0 | 0 | 1 | 1 | 0 | 1 | 1 | 1 | 4 | 5 |
| Regional & nature parks[3] | 0 | 0 | 0 | 3 | 4 | 7 | 0 | 0 | 0 | 3 | 4 | 7 | 0 | 0 | 0 | 6 | 8 | 14 |
| **Total** | **218** | **199** | **417** | **15** | **91** | **106** | ~~37~~ 29 | ~~20~~ 31 | ~~57~~ 60 | **228** | **153** | **381** | **342** | **197** | **539** | ~~840~~ 832 | ~~660~~ 671 | ~~1500~~ 1503 |

[1] Golf course is assumed to include 9-holes and a club house/pro shop.
[2] Light Industrial is assumed to include wine tasting and production.
[3] The trip generation estimates for Subareas G and E are included in Subareas B and D, respectively. These parks generate a combined estimated 23 trips during the weekday p.m. peak hour.

## Attachment 5: Signed Planning Commission Order of Recommendation

# DUNDEE PLANNING COMMISSION ORDER

FILE NUMBERS CPA 22-16 and ZC 22-16

AN ORDER APPROVING A COMPREHENSIVE PLAN AMENDMENT AND A ZONE CHANGE FROM A (AGRICULTURE) TO P (PUBLIC) FOR THE PROPERTY LOCATED AT THE SOUTHEAST CORNER OF SE EDWARDS DRIVE/SE 8TH STREET, TAX LOT 3336-00100

RECITALS:

1. Harper Houf Peterson Righellis, Inc. representing Newberg Public Schools submitted an application requesting a Comprehensive Plan Amendment to the text and Riverside District Master Plan, and a Zoning Map amendment from A (Agriculture) to P (Public) for 15.48 acres on tax lot 3336-00100 located at the southeast corner of SE Edwards Drive and SE 8th Street.

2. After proper notice, the Dundee Planning Commission held a public hearing on October 19, 2022, to consider the application. The Commission took public testimony, closed public testimony, and deliberated.

3. The Dundee Planning Commission finds that the application met the applicable criteria from the Dundee Development Code, the goals and policies of the Dundee Comprehensive Plan, and Oregon Statewide Planning Goals as shown in the findings in Exhibit "B".

**The Dundee Planning Commission orders the following:**

1. The Planning Commission recommends that the Dundee City Council amend the Comprehensive Plan (text and Riverside Master Plan).

2. The Planning Commission recommends that the Dundee City Council amend the Zoning Map for the property shown and described in Exhibit "B".

3. The Planning Commission recommends the Dundee City Council deny the Comprehensive Plan Map amendment.

4. This recommendation is based on the findings shown in Exhibit "C" and public testimony.

5. Exhibits "A", "B" and "C" are hereby attached and by this reference incorporated.

APPROVED BY THE DUNDEE PLANNING COMMISSION THIS 19th DAY OF October, 2022:

AYE: 6 NAY: 0 ABSTAIN: 0 ABSENT: 1

SIGNED: 10/28/22

Ed Carlisle Date
Planning Commission Chair

ATTEST: 10/28/22

Steve Dahl Date

City Administrator

List of Exhibits:

Exhibit "A": Dundee Comprehensive Plan

Exhibit "B": Zoning Map Amendment

Exhibit "C": Findings

# Attachment 6: Applicant's Materials

# Type IV Review

Zone Map Amendment | Comprehensive Plan Map Amendment

Fee: $720.00 + $2500.00 deposit | File No. _____
Fee: $1080.00 + $3750.00 deposit (if both applications are necessary)

Applicability: A **zone change** application is used to request a change from one zoning designation to another for a property or group of properties.

A **comprehensive map amendment** application is used to request a change from one comprehensive plan designation to another. In general, comprehensive plan designations mirror zoning designations and often need to be updated at the same time to remain consistent.

| | |
|---|---|
| **Applicant:** Harper Houf Peterson Righellis, Inc. - Attn: Brad Kilby, AICP | |
| **Address:** 205 SE Spokane Street, Suite 200, Portland, OR 97202 | |
| **Email Address:** bradk@hhpr.com | |
| **Phone(s):** (503)221-1131 | |
| **Owner (if different from above):** Newberg Public Schools - Nikki Fowler, Director of Finance | |
| **Owner Address:** 714 East 6th Street, Newberg, OR 97132 | |
| **Engineer/Surveyor:** KPFF Consulting Engineers - Mark Wharry, PE | |
| **Phone:** 503-227-3251 | |
| **Engineer/Surveyor Address:** 111 SW 5th Avenue #2600, Portland, OR 97204 | |
| **Project Name:** Dundee Elementary School Comprehensive Plan Amendment/Zone Change | |
| **Project Location:** Southeast corner of the intersection of SE 8th/SE Edwards Drive | |
| **Map/Tax Lot No.:** 3S3W3600100 | |
| **Current Zone:** Agriculture | **Proposed Zone:** Public |
| **Comp Plan Designation:** Agriculture | **Proposed Comp Plan Designation:** Public |
| **Project Description:** The applicant is proposing to rezone 15.48 acres within Subarea C of the Riverside District Master Plan Area from Agriculture (A) to Public (P) and to construct a new Elementary School on the property. The improvements would include parking, bus loading, play areas, playing fields, stormwater detention, and other public improvements. | |

## Submittal Requirements (10 copies + one electronic copy of all information)

- ☒ Title report that includes a map and legal description of the property

- ☒ Site plan showing:
  1. Existing features of the site
  2. Existing utilities

- ☒ Written response to the applicable criteria

  **For a zone change (17.405.030(A)):**
  1. How the proposal is consistent with the comprehensive plan map (the comprehensive plan map may be amended concurrently with proposed changes in zoning).
  2. How the site is appropriate for the proposed change, in terms of purpose of the proposed zone, topography, access, and required size and dimensions.
  3. Public facilities are available, or can be readily made available, to adequately serve the permitted and conditional uses of the proposed zone.

  **In addition to the above, for a Comprehensive Plan Map amendment (17.405.030(B)):**
  1. The supply of vacant land in the proposed designation is inadequate to accommodate development during the next five years, or the site is not physically or locationally suited to the requirements of the existing designation;
  2. The supply of vacant land in the existing designation remains adequate after the proposed change to accommodate development during the next five years;
  3. The proposal is consistent with applicable comprehensive plan goals and policies, statewide planning goals, and Oregon Administrative Rules.

- ☒ Transportation Planning Rule Analysis pursuant to OAR 660-012-0060.

I attest that to the best of my knowledge the information provided herein and attached is accurate; and, certify that approval of the adjustment does not create a violation of any other code standard or previous land use approval.

All owners must sign the application or submit letters of consent.

| | |
|---|---|
| Brad Kilby Digitally signed by Brad Kilby DN: C=US, E=bradk@hhpr.com, O="Harper Houf Peterson Righellis, Inc.", OU=Planning, CN=Brad Kilby Reason: I am the author of this document Date: 2022.06.16 16:22:55-07'00' 06/23/22 | Nikki L. Fowler Jun 18, 202 Nikki L. Fowler (Jun 18, 2022 11:50 PDT) |
| Applicant Signature Date | Owner Signature Date |
| Brad Kilby | Nikki L. Fowler |
| Print Name | Print Name |

## Process

A zone change and comprehensive map amendment is a Type IV application, which involves a public hearing and provides an opportunity for those who appear to appeal the Planning Commission decision to the City Council. The process also requires public notice to all properties within 100 feet of the project site. This application will go through the following process:

1. Applicant submits application form and all required materials for review.
2. City staff will do a completeness check and let you know whether more information is needed (within 30 days of application).
3. City staff will send the required 35-day notice to the Department of Land Conservation and Development (DLCD).
4. City staff will prepare and mail notice to all property owners within 100 feet of the project site, and will send the application materials for review and comments to internal and external departments and agencies. This is a two-week long comment period.
5. Once all comments are received, city staff will prepare a staff report on the application.
6. Planning Commission will hold a hearing and make a recommendation on the application to the City Council.
7. City Council will hold a hearing and make a decision on the application.

# Dundee Elementary School

Comprehensive Plan Amendment and Zone Change

| | |
|---|---|
| **Owner:** | Newberg School District<br>**Attn:** Nikki Fowler, Director of Finance/Human Resources<br>714 East 6th Street<br>Newberg, OR 97132 |
| **Applicant:** | Brad Kilby, AICP<br>Harper Houf Peterson Righellis, Inc.<br>205 SE Spokane Street, Suite 200<br>Portland, OR 97202<br>(503) 221-1131<br>bradk@hhpr.com |
| **Land Use Attorney:** | Kelly Hossaini, Partner<br>Miller Nash LLP<br>111 SW Fifth Avenue, Ste. 3400<br>Portland, OR 97204 |
| **Site Location:** | T3SR3WS360100 |
| **Project Size:** | 15.48 Acres |
| **Zone:** | Public (P) |
| **Summary of Request:** | The applicant is proposing to rezone Subarea C of the Riverside District Master Plan Area from Agriculture (A) to Public (P) to support a future land use application for the construction of a new Elementary School on the property. The future elementary school improvements will include parking, bus loading, play areas, playing fields, stormwater detention, and other public improvements. |
| **Date:** | July 1, 2022 |

# Table of Contents


I. SUMMARY OF PROPOSAL AND REQUEST ..... 3

Existing Conditions ..... 3

Proposal ..... 3

II. RESPONSE TO APPROVAL CRITERIA FOR MAP OR CODE AMENDMENT ..... 4

Chapter 17.405: Map or Code Amendments ..... 4

III. CONCLUSION ..... 14


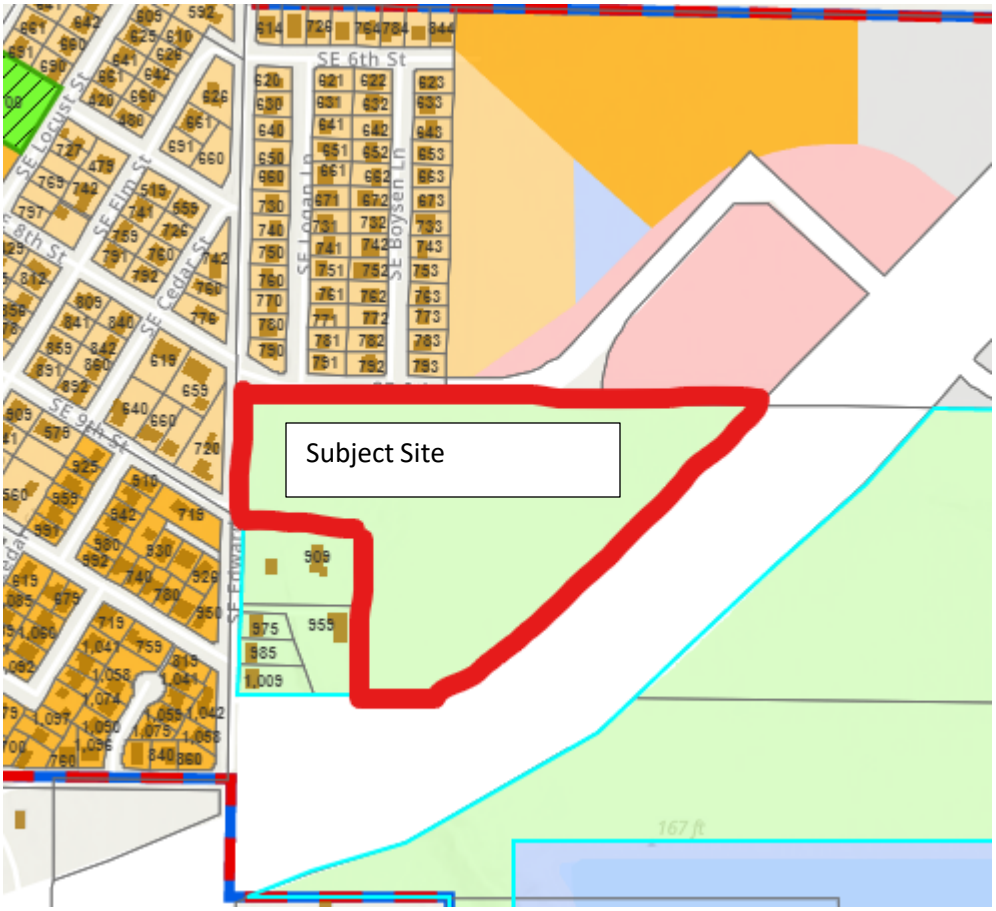

# I. SUMMARY OF PROPOSAL AND REQUEST

## Existing Conditions

The project site is located in Subarea C within the Riverside District Master Plan Area and includes Tax Lot 3S3W3600100. The project site is bordered by SE 8th Street to the north, SE Edwards Drive to the west, and the Newberg-Dundee Bypass (Highway 18) to the east. Currently, the project site is undeveloped.

Vicinity Map

## Proposal

The Newberg School District (the District) is proposing to rezone Subarea C of the Riverside District Master Plan Area from Agriculture (A) to Public (P) to support the future construction of a new Dundee Elementary School on the property. The new school would include associated parking and bus loading with access off of SE 8th Avenue, a soft play area, playing fields, and storm water detention facilities. The current application is for the comprehensive plan amendment and zone change only. A future land use application will be submitted for the approval of actual site development.

# II. RESPONSE TO APPROVAL CRITERIA FOR MAP OR CODE AMENDMENT

## Chapter 17.405: Map or Code Amendments

Section 17.405.030: Criteria

*Approval of an ordinance amending the zoning map, comprehensive plan map, comprehensive plan, or development code shall be based on the following:*

A. *Zoning Map Amendment. Proposals for a zoning map amendment must comply with the following criteria:*

   1. *The proposal must be consistent with the comprehensive plan map (the comprehensive plan map may be amended concurrently with proposed changes in zoning).*

**Response:** The comprehensive plan map shows the property as Agriculture (A). The District proposes to amend the zoning and comprehensive plan map from Agriculture to Public (P) to allow for construction of a new elementary school to replace the existing Dundee Elementary School located at 140 SW 5th Street. In this instance, the District is requesting a concurrent amendment to both the Comprehensive Plan Map and Zoning map. If approved, the zoning and comprehensive plan designation would be consistent. The property is also located within the Riverside District Master Plan. As of the date of this application, the Dundee City Council has only accepted the code and zoning changes for the Riverside District Master Plan, but they have not been officially adopted.

   2. *The site(s) must be appropriate for the proposed change, in terms of purpose of the proposed zone, topography, access, and required size and dimensions.*

**Response:** The site is appropriate for the proposed change. The property is located within the existing city limits and test fits have been completed by the architect and engineer for the site to ensure that an elementary school and all of the accessory uses customarily associated with an elementary school (i.e. playfields, parking, service facilities, etc.) could be built on the site. The property is relatively flat and could obtain access from SE 8th Street, an existing public right of way. There are adequate public utilities to serve the site, which could be extended to the site from existing sewer and water services located in SE 8th and SE Edwards Drive. The current version of the site plan being considered is attached as Appendix 1 to this application narrative. The attached site plan is conceptual only. The actual elementary school development will be further discussed with city staff and will be the subject of a future land use application.

   3. *Public facilities are available, or can be readily made available, to adequately serve the permitted and conditional uses of the proposed zone.*

**Response:** Elementary and Secondary schools are listed as outright permitted uses within the Public zone designation. As stated previously, public facilities are adequate to serve an elementary school and can be readily extended to the property from existing utilities located in SE 8th and SE Edwards Drive. If the zoning and comprehensive plan map amendments are approved, the District would file a separate application within the following 6 months seeking formal site plan approval for the new elementary school. The utilities

necessary to serve the property would be extended to the site and upgraded where needed to adequately serve the property. The costs of those utility extensions to serve the site would be financed by the District.

4. *The amendment must conform to the transportation planning rule provisions under DMC 17.405.040.*

**Response:** A formal traffic impact analysis was conducted by DKS Associates for the proposed zone and comprehensive plan map amendments. That analysis is attached to this application as Appendix 2. Because the District proposes to rezone the parcel to Public (P) zoning, the proposed zone change must be in accordance with Oregon Administrative Rule (OAR) 660-012-0060, the Transportation Planning Rule (TPR). The intent of the TPR (OAR 660-12-0060) is to ensure that future land use and traffic growth is consistent with transportation system planning and does not create a significant effect on the surrounding transportation system beyond currently allowed uses. The definition of a significant effect varies by jurisdiction and no such definition is provided in the City of Dundee code. According to the Oregon Highway Plan (OHP), a net increase of 400 daily trips qualifies as a significant effect. While the OHP is not applicable to city streets, it provides a reasonable estimate of a significant effect for TPR analysis purposes.

For the purposes of the analysis, DKS considered the traffic impacts of a 350-student elementary school on the transportation system under the current conditions and the year of opening conditions which was anticipated to be 2024. Even though the property is currently zoned agriculture (A), it was determined that the number of trips generated by the site would be negligible and that it would be better to evaluate the reasonable worst-case scenario under the planned zoning for the property as set forth in the Dundee Riverside District Master Plan, which is Riverside Residential. It's important to note that existing residents would realize a significant increase in traffic under both scenarios, but as clearly illustrated within the traffic analysis, the increase in trips would not cause any of the existing transportation facilities to fail.

Under the Riverside District Master Plan, the site would be zoned Riverside Residential which would be allowed to be developed with a variety of residential uses. The analysis considered the impacts associated with 64 single-family and multi-family units as the reasonable worst-case scenario for the site consistent with the anticipated density within this area. Under the proposed Public Zoning, the elementary school was considered the reasonable worst-case scenario for the site. The findings of their analysis demonstrated that the elementary school would add 19 more weekday trips compared to the residential use of the property for 64 single-family and multi-family residences.

Those impacts were applied to five study intersections:

- OR 99W/ 5th Street
- OR 99W/ 10th Street
- OR 99W/ Parks Drive/ Niederberger Road
- Edwards Drive/ 5th Street
- Edwards Drive/ 8th Street

Finally, the study determines whether or not the reasonable worst-case scenario causes any of the studied intersections or transportation facilities to fail under a level of service standard or volume to capacity ratio along ODOT facilities. In this instance, the traffic study concludes that all study intersections would continue to meet City and ODOT standards if the site were to be rezoned and redeveloped with an elementary school.

*B. Comprehensive Plan Map Amendment. Proposals for an amendment to the comprehensive plan must comply with the following criteria:*

*1. The supply of vacant land in the proposed designation is inadequate to accommodate development during the next five years, or the site is not physically or locationally suited to the requirements of the existing designation;*

**Response:** The property is currently zoned Agriculture (A) and the proposed zoning is Public (P). Additionally, the property is located within the Riverside District Master Plan (Subarea C). Although that plan is not formally adopted, the zoning and code changes for the district were accepted by the City Council in 2019. This is to say that the City of Dundee recognizes that this property and all of the properties within the Riverside District Master Plan will be urbanized and provided with urban level services in the future. Within Subarea C, the master plan calls for a designation of residential uses and a neighborhood park. It should be noted that a school is an allowed use in the contemplated Riverside Residential zone, so the possibility of an elementary school in Subarea C existed at the time the City Council accepted the Riverside District Master Plan. A school in this location will be better suited to serve elementary school children throughout the entire community as the Riverside Master Plan area develops over time. The school will be centrally located within the community and more importantly away from the Highway 99W corridor. The overall master plan planning area is approximately 360 acres in size and is planned to be converted from agricultural uses to a combination of residential, commercial, and light industrial uses over the life of the plan. Simply stated, the entire master plan area is part of the City of Dundee plan to accommodate future growth. Upon realization of the plan, the area would accommodate approximately 970 new dwelling units and just shy of 500,000 square feet of new commercial and light industrial development. The plan identifies a need for approximately 41 acres of land zoned for public uses. Although the plan itself recognizes that the District may identify a need for a future school, it did not designate any potential school sites. The plan indicates that the future school site would need to be identified consistent with the policies of the Dundee Comprehensive Plan or School District Facility Plan. The District, as part of its future facilities plan has identified the need to replace the existing Dundee Elementary School and is formally filing this request to amend the Zoning and Comprehensive Plan map designations for this selected site. As demonstrated within this narrative and the accompanying appendices, this site is an appropriate location for a school and could serve the existing residents as well as the future residents of the Riverside District Master Plan.

*2. The supply of vacant land in the existing designation remains adequate after the proposed change to accommodate development during the next five years;*

**Response:** The City of Dundee has traditionally been a community that supports the surrounding farming uses and agricultural uses, which have been part of the community for a long time. Through the 2019 acceptance

of the Riverside District Master Plan, however, the City has recognized that it is growing and needs to accommodate that future growth. The subject site is currently zoned Agriculture (A) but is slated to be urbanized under the Riverside District Master Plan. It is within the City's urban growth boundary and its city limits, neither of which support or were designed to support long-term agricultural use. In fact, under the proposed zoning within the masterplan this subarea is planned to accommodate a community park and 64 residential units. Within the masterplan, the property would be rezoned to Riverside Residential. . Even though the City development code has an Agriculture zoning designation, it's unlikely that the City would continue to designate lands within the existing and future city limits with this designation for any reason other than to protect existing properties that are actively being farmed until they are redeveloped. As cities grow, it is not customary to designate new lands with an agricultural zoning designation. For these reasons, the supply of land in the existing designation remains adequate for those areas within the City limits that are being farmed.

3. *The proposal is consistent with applicable comprehensive plan goals and policies, statewide planning goals, and Oregon Administrative Rules.*

**Response:** The proposal is consistent with the applicable comprehensive plan goals and policies, statewide planning goals, and applicable Oregon Administrative Rules as discussed below:

**Dundee Comprehensive Plan**

**Response:** The City's Comprehensive Plan is dated and projects population growth to the year 2000. This request is consistent with the Land Use and Urbanization section goal to, "provide sufficient land to meet the needs for future urban expansion." There were no other policies found within the remaining comprehensive plan that appeared to apply to this specific request.

**Riverside District Master Plan**

**Response:** Although the Riverside District Master Plan was not adopted, it was accepted by resolution and there were specific changes to maps and policies within the masterplan identified by staff in the pre-application conference that would need to be amended if the proposed zone and map amendment are approved. Those items are identified as follows:

- Figure 1 on Page 6 of the masterplan would need to be amended to show the subarea C portion of the Master Plan as being Public as opposed to Riverside Residential. In early discussions with staff, the neighborhood park identified in Subarea C could be fulfilled by the open spaces provided by the school so long as the public is aware that school grounds are generally only open to the public outside of school hours.
- The description of Subarea C would need to be amended so that there would be an understanding that the area is designated for public facilities including a school and accessory facilities that provide some of the functions of a neighborhood park to include preservation of a grove of Oak trees adjacent to SE Edwards Drive on the west end of the subject property.

- Table 1 – Riverside District Land Uses – on page 15 would need to be amended to reflect the reduction in residential uses by 15.48 acres, but it does not necessarily mean that the target number of dwelling units would need to decrease since the 64 units anticipated for this area could be recaptured through more intense residential zoning or development in other sub areas. Further, as noted earlier, the Riverside Residential zone does allow elementary schools, as well as other uses, such as a church, so there was never a guarantee that residential units would ultimately be built in the subarea. Instead it could have ultimately developed as any one of the non-residential uses allowed. It's also noted that some of the residential density could be recaptured at the existing Dundee Elementary School site if sold and developed under the current residential designation.
- Table 2 – Target Dwelling Units and Non-Residential Floor Area by Subarea and Land Use – on page 16 would need to be amended to illustrate that the property was rezoned to eliminate the residential capacity from 64 units to 0 and replaced with a Public Land Use Designation.
- Riverside District Policy #8 found on page 17 and Policy #9 found on page 18 indicating that a need for a future school was identified by the Newberg School District and that Subarea C was the selected location.
- Table 3 - Riverside District Land Uses by Subarea – found on page 23 would need to be amended to show that there were no longer any proposed single-family or multi-family uses within Subarea C.
- Table 5 – Estimated Riverside District Trip Generation – Weekday Peak Hour – found on page 25 would need to be amended to show that there were no residential trips generated within Subarea C, and modified to add a school to the list of uses and revise the table to show that there would be 54 trips into the site and 65 trips out of the site for a total of 119 trips during the afternoon peak hour.
- Table 6 – Estimated Trip Distribution by Subarea – would need to be amended to be consistent with the revised trip distribution provided within the DKS traffic analysis which states, "The distribution shows 25% of trips traveling to/from the north of 5th Street along OR 99W, 55% of trips traveling to/from the west side of OR 99W, 5% traveling to/from the south of Dundee, and 15% of trips traveling to/from the neighborhoods on the east side of OR 99W.

Finally, it was suggested that if the proposed amendments were approved, then the requirement to go through a Subarea Site Development Master Plan Process should be eliminated since the entire site would be developed with a school and associated facilities. The District has proposed the zoning and comprehensive plan amendment, and would be supportive of these changes should they be approved by the City of Dundee.

**<u>Statewide Planning Goals</u>**

**GOAL 1 – Citizen Involvement**

*To develop a citizen involvement program that insures the opportunity for citizens to be involved in all phases of the planning process.*

**Response:** The District has actively engaged the public in its efforts to pass the bond for the current school improvements including the replacement of Dundee Elementary School. The City's public notice and hearing

process meets the requirements of this Goal for citizen involvement in the land use process. Notice of the proposal will be provided to all property owners within the notice area, published in the newspaper, and will also be posted on the subject property, giving interested citizens an opportunity to be involved in the process. A public hearing to consider the request will be held by the Planning Commission who will make a recommendation City Council who will make a decision following an open public record period and hearing. Through the notice and public hearing process, all interested parties are afforded the opportunity to review the application, comment on the proposal, and participate in the decision. This process meets the requirements of this Goal for citizen involvement in the land use planning process. In accordance with the findings presented above, the proposed Comprehensive Plan and Zoning Map Amendment are consistent with Goal 1.

**GOAL 2 – LAND USE PLANNING**

*To establish a land use planning process and policy framework as a basis for all decision and actions related to use of land and to assure an adequate factual base for such decisions and actions.*

**Response:** The Dundee Comprehensive Plan is presumably acknowledged to be in compliance with the Statewide Planning Goals and provides goals, policies that have been implemented through the development code to include procedures for reviewing and evaluating land use requests. The City's adopted land use planning process provides for Plan Map Amendments and is consistent with Goal 2.

**GOAL 3 – AGRICULTURAL LANDS**

*To preserve and maintain agricultural lands.*

**Response:** The subject property is comprised of land that is currently located within the existing City limits and Urban Growth Boundary (UGB). Upon formal adoption of the Riverside District Masterplan, it is anticipated that the land will be converted from agriculture for urban development. The Comprehensive Plan Map Amendment and Zone Change will only affect this site. Approval of this request would amend the comprehensive plan designation and zoning designation of the site to Public (P).

**GOAL 4 – FOREST LANDS**

*To conserve forest lands by maintaining the forest land base and to protect the state's forest economy by making possible economically efficient forest practices that assure the continuous growing and harvesting of forest tree species as the leading use on forest land consistent with sound management of soil, air, water, and fish and wildlife resources and to provide for recreational opportunities and agriculture.*

**Response:** There are no forest lands affected by this request. Compliance with this goal is not necessary for this application.

**GOAL 5 – OPEN SPACE, SCENIC AND HISTORIC AREAS, AND NATURAL RESOURCES**

*To protect natural resources and conserve scenic and historic areas and open space.*

**Response:** There are no known historic or designated scenic areas on this property. If Goal 5 resources are subsequently found to be present on the site, future development would be subject to the same regulations within the City that are intended to satisfy Goal 5.

**GOAL 6 – AIR, WATER AND LAND RESOURCES QUALITY**

*To maintain and improve the quality of the air, water and land resources of the state.*

**Response:** The subject property is located within the UGB and city limits, where development at an urban scale and density is anticipated to occur. While the organization of uses and those uses specifically allowed within the property will change, no significant negative change in the quality of air is expected to occur. A future elementary school on the property would not involve any additional noise or smoke that would affect the surrounding air, water, or land resource quality beyond what would customarily be expected for land that is converted to urban uses from agricultural use.

With future development of the site, public sewer, storm sewer, and water facilities will be extended to the site. Future development of the property would be subject to the regulations of the City of Dundee zoning code and public works design standards that are intended to implement this goal. The proposed Comprehensive Plan Map Amendment and Zone Change is consistent with Goal 6.

**GOAL 7 – AREAS SUBJECT TO NATURAL DISASTERS AND HAZARDS**

*To protect people and property from natural hazards.*

**Response:** The subject property is located outside the 100-year floodplain. The site is relatively flat with slopes between 3 and 5 percent. There are no known landslide hazards or steep slopes. Detailed review of the site will be completed during the subsequent development of the site to assure that any impacts natural hazards are avoided, or if necessary, mitigated to the standards of the code.

**GOAL 8 – RECREATIONAL NEEDS**

*To satisfy the recreational needs of the citizens of the state and visitors and, where appropriate, to provide for the siting of necessary recreational facilities including destination resorts.*

**Response:** The proposed amendments will allow for the potential development of the site with a new elementary school. Future development of the site will include transportation improvements that will enhance access to other recreational areas in the community (parks and schools). Therefore, the proposed Comprehensive Plan Map Amendment and Zone Change are consistent with the applicable provisions of Goal 8.

**GOAL 9 – ECONOMIC DEVELOPMENT**

*To provide adequate opportunities throughout the state for the variety of economic activities vital to the health, welfare, and prosperity of Oregon's citizens.*

**Response:** The proposed amendment would allow future development of an essential public facility to the community. The added capacity that this plan intends to provide for the District would potentially enhance opportunities for the community to attract new residents and businesses. The proposal does not preclude the City from meeting its Goal 9 planning obligations.

**GOAL 10 – HOUSING**

*To provide for the housing needs of the citizens of the state.*

**Response:** The proposed Comprehensive Plan Map Amendment does not affect the immediate availability of housing within the City limits. The site would redesignate an area identified as Riverside Residential within the Riverside District Master Plan and potentially displace 64 planned residential units within the subarea, but that plan has not been formally adopted. There is the potential that a portion of the existing Dundee Elementary School Site could be sold and accommodate some residential development. Additionally, other subareas within the Riverside District Master Plan could be rezoned or will otherwise redevelop to accommodate higher densities within the area. This proposal does not preclude the City from meeting its 20-year housing demand and provides land for a use that is generally considered supportive of housing.

***GOAL 11 – PUBLIC FACILITIES AND SERVICES***

*To plan and develop a timely, orderly and efficient arrangement of public facilities and services to serve as a framework for urban and rural development.*

**Response:** The City maintains an infrastructure of public facilities and services to support urban development. The City has adopted Transportation, Stormwater, Wastewater and Water master facility plans. These plans outline the public facilities and services needed to serve land within the City limits and UGB. The existing public services and facilities in the area can be extended to serve the site consistent with the utility master plans upon approval of the development. The District realizes that it will be responsible for the costs to extend those utilities necessary to serve the site. The proposed map amendments are consistent with Goal 11.

***GOAL 12 – TRANSPORTATION***

*To provide and encourage a safe, convenient and economic transportation system.*

**Response:** The City of Dundee Transportation System Plan (TSP) is in compliance with the requirements of this Goal. The relationship of the proposal to the transportation system, and its impacts, have been evaluated in the

Transportation Planning Rule (TPR) Traffic Analysis prepared by the applicant's traffic engineer, DKS Associates. The analysis has found that the traffic impacts of the project will not cause a change in the functional classification of any street or transportation facility and will not require or result in changes to the standards that implement the functional classifications system. The proposed plan amendment is therefore in compliance with the Oregon Transportation Planning Rule, the Dundee Transportation System Plan and the goals and policies contained within the Dundee Comprehensive Plan. The proposed amendments are consistent with Goal 12.

***GOAL 13 – ENERGY CONSERVATION***

*To conserve energy.*

**Response:** The design and construction of the future elementary school is intended to be located in close proximity to the student population allowing the opportunity for less vehicle trips and miles traveled resulting in a reduction in the consumption of gasoline and associated emissions. Future development of the site, and surrounding transportation infrastructure should encourage the use of alternative modes of transportation (bicycles, walking). The existing system should provide direct, efficient and convenient access to the school, and its proximity to adjacent and future planned residential neighborhoods. If these amendments are approved and the future development of an elementary school is approved, the school will be designed and constructed in compliance with the latest energy codes. For these reasons, the proposal will help conserve energy and be energy efficient, in keeping with the intent of this Goal.

***GOAL 14 – URBANIZATION***

*To provide for an orderly and efficient transition from rural to urban land use, to accommodate urban population and urban employment inside urban growth boundaries, to ensure efficient use of land, and to provide for livable communities.*

**Response:** The project site is located within the City limits and UGB. All required public facilities and services are available and can be extended to the property upon approval of development consistent with the new zoning and comprehensive plan map designations. The proposal does not affect the size or location of the existing city limits and UGB. In accordance with the findings presented above, the Comprehensive Plan Map Amendment and Zone Change is consistent with Goal 14.

***GOAL 15-19***

**Response:** Statewide planning goals 15-19 are not applicable to this area of the state and are not addressed as a part of this proposal.

C. *Development Code Amendment. Proposals for a development code amendment must comply with applicable comprehensive plan goals and policies, statewide planning goals, and Oregon Administrative Rules.*

**Response:** This proposal does not include an amendment to the development code; therefore, this criterion is not applicable to this request.

D. *Comprehensive Plan Amendment. Proposals for a comprehensive plan amendment must comply with applicable statewide planning goals and Oregon Administrative Rules and Revised Statutes.*

**Response:** The proposed comprehensive plan map amendment would redesignate the subject property to Public (P) from Agriculture (A). Although it hasn't been formally adopted, the project would also amend Riverside District Master Plan. The Statewide Planning Goals and amendments to the Riverside District Master Plan are addressed under subsection (B.) above.

<u>Section 17.405.040: Transportation Planning Rule Compliance</u>
*Proposals to amend the comprehensive plan or zoning map shall be reviewed to determine whether they significantly affect a transportation facility pursuant to OAR 660-012-0060 (Transportation Planning Rule – TPR). Where the city council, in consultation with the applicable roadway authority, finds that a proposed amendment would have a significant effect on a transportation facility, the city shall work with the roadway authority and applicant to modify the request or mitigate the impacts in accordance with the TPR and applicable law.*

**Response:** As discussed earlier, the intent of the TPR (OAR 660-12-0060) is to ensure that future land use and traffic growth is consistent with transportation system planning and does not create a significant effect on the surrounding transportation system beyond currently allowed uses. The definition of a significant effect varies by jurisdiction and no such definition is provided in the City of Dundee code. According to the Oregon Highway Plan (OHP), a net increase of 400 daily trips qualifies as a significant effect. While the OHP is not applicable to city streets, it provides a reasonable estimate of a significant effect for TPR analysis purposes.

For the purposes of the analysis, DKS considered the traffic impacts that construction of a 350-student elementary school would have on the transportation system under the current conditions and the year of opening conditions which was anticipated to be 2024. Even though the property is currently zoned agriculture (A), it was determined that the number of trips generated by the site would be negligible and that it would be better to evaluate the reasonable worst-case scenario under the planned zoning for the property considered in the Dundee Riverside District Master Plan. It's important to note that existing residents would realize a significant increase in traffic under both scenarios, but as clearly illustrated within the traffic analysis, the increase in trips would not cause any of the existing transportation facilities to fail.

Under the Riverside District Master Plan, the site would be zoned Riverside Residential which would be allowed to be developed with a variety of residential uses. The analysis considered the impacts associated with 64 single-family and multi-family units as the reasonable worst-case scenario for the site consistent with the anticipated

density within this area. Under the proposed Public Zoning, the elementary school was considered the reasonable worst-case scenario for the site. The findings of DKS' analysis demonstrated that the elementary school would add 19 more weekday trips compared to the residential use of the property for 64 single-family and multi-family residences.

Those impacts were applied to five study intersections:

- OR 99W/ 5th Street
- OR 99W/ 10th Street
- OR 99W/ Parks Drive/ Niederberger Road
- Edwards Drive/ 5th Street
- Edwards Drive/ 8th Street

Finally, the study determines whether or not the reasonable worst-case scenario causes any of the studied intersections or transportation facilities to fail under a level of service standard or volume to capacity ratio along ODOT facilities. In this instance, the traffic study concludes that all study intersections would continue to meet City and ODOT standards if the site were to be rezoned and redeveloped with an elementary school.

# III. CONCLUSION

This narrative and the accompanying appendices provide the information necessary to approve a Comprehensive Plan and Zone Map amendment for Subarea C. The District respectfully requests that the City approve the request and amend the Comprehensive Plan and Zoning Maps to designate this property Public (P).

**APPENDIX 1**
**CONCEPTUAL SITE LAYOUT**

# Riverside District Master Plan

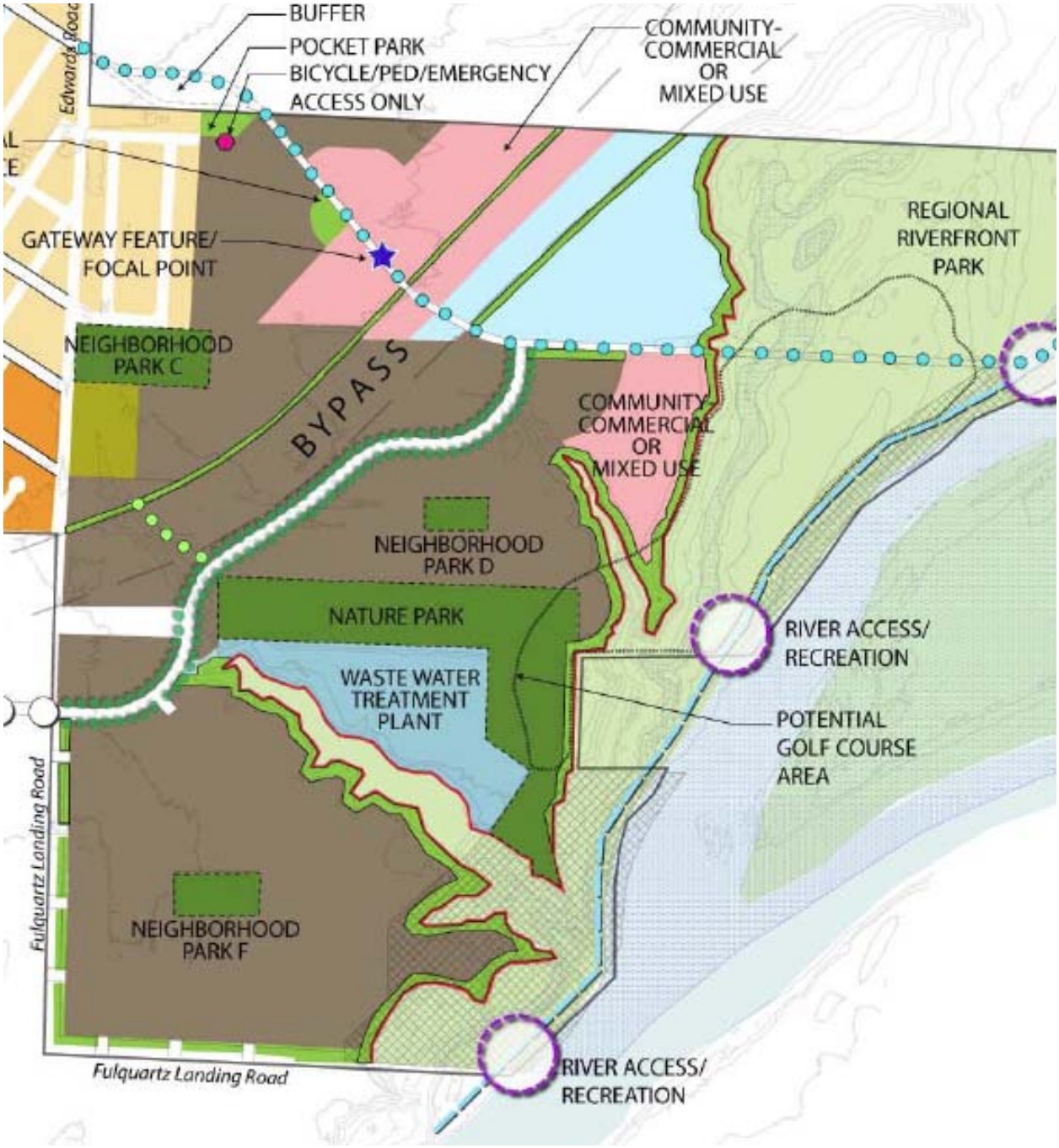


CITY OF Dundee OREGON

**Prepared for the City of Dundee**

June 2011

# Riverside District Master Plan

**Prepared for the City of Dundee**

**By Angelo Planning Group**

**In Association with**

**Cogan Owens Cogan, LLC**

**GreenWorks**

**Johnson Reid, LLC**

**Kittelson & Associates, Inc.**

**June 2011**

This project is partially funded by a grant from the Transportation and Growth Management Program ("TGM"), a joint program of the Oregon Department of Land Conservation and Development (DLCD) and the Oregon Department of Transportation (ODOT). This is financed in part by federal Safe, Accountable, Flexible, Efficient Transportation Equity Act: A Legacy for Users (SAFETY-LU), local government and State of Oregon funds.

The contents of this document do not necessarily reflect the views or policies of the State of Oregon.

## Acknowledgements

**City of Dundee City Council**
Ted Crawford, Mayor
Doug Pugsley, President
Jeannette Adlong
Ivon Miller
Jennifer Munson
Storr Nelson
J. Randy Reddell

**City of Dundee Planning Commission**
Jerry Fiedler, Chairman
David Hinson, Vice-Chairman
Ron Mock
Nick Wymore
Gary Manning
Larry Lietz

**Technical Advisory Committee (TAC)**
Rob Daykin, City of Dundee
Luke Pelz, City of Dundee
Naomi Zwerdling, ODOT
Cliff Houck, Oregon Parks and Recreation Dept
Don Clements, Chehalem Parks and Recreation District
Ken Friday, Yamhill County
Steve Oulman, DLCD
Dan Fricke, ODOT Region 2
Terry Cole, ODOT Region 2
Chris Bailey, ODOT Region 2
Angela Kargel, ODOT Region 2
Dorothy Upton, ODOT
Roger Gutierrez/Sheila Lyons, ODOT

**Citizen Advisory Committee (CAC)**
Susan Baird
Jessica Cain
Paul de Lancellotti
Tom and Kay Edwards
Jerry Fiedler
Rod Grinberg
Dixie Hancock
Stuart Lindquist
Storr Nelson
Doug Pugsley
Dian Maybury
Truman Stone
Mart Storm

## Table of Contents

Executive Summary ..... 1
I. Background ..... 3
II. The Plan ..... 5
A. Plan and Zoning Designations ..... 12
B. Riverside District Policies ..... 16
Land Use ..... 16
Transportation ..... 18
Water, Wastewater and Stormwater ..... 19
Parks, Open Space and Trails ..... 19
C. Implementation ..... 20
Land Use and Development ..... 20
Transportation Facilities and Improvements ..... 21
III. Future Actions ..... 27
Other Implementation and Phasing Issues and Actions ..... 27
Appendices ..... 30

**Appendix A – Comprehensive Plan Amendments – New Riverside District Chapter**
**Appendix B – Supporting Documents (Adopted by Reference)**
Appendix B1 – Project Goals, Objectives and Evaluation Criteria
Appendix B2 – Meeting Summaries
Appendix B3 – Public Involvement Summary
Appendix B4 – Dundee Identity Framework Plan
Appendix B5 – Background Conditions Report
Appendix B6 – Charrette Report
Appendix B7 – Land Use Alternatives Report
Appendix B8 – Transportation Analysis
Appendix B9 – Cost Estimates, Funding Strategies and Responsibilities

**Figures**
Figure 1 – Riverside District Land Use Plan
Figure 2 – Riverside District Subareas
Figure 3 – Riverside District Transportation Framework Plan
Figure 4 – Standard Cross Sections for Local Streets
Figure 5 – Standard Cross Sections for Parkway Collector and Collector Streets
Figure 6 – Riverside District Natural Resources and Riparian Areas

**Tables**
Table 1 – Riverside District Land Uses
Table 2 – Target Dwelling Units and Non-Residential Floor Area by Subarea and Land Use
Table 3 – Riverside District Land Uses by Subarea
Table 4 – Trip Generation Rates
Table 5 – Estimated Riverside District Trip Generation – Weekday PM Peak Hour
Table 6 – Estimated Trip Distribution by Subarea
Table 7 – Riverside District Action Chart

# Executive Summary

The Riverside District Master Plan area is comprised of about 360 acres in the City of Dundee, Oregon. The planning area fronts the Willamette River for over 6,000 linear feet across from Ash Island in the Chehalem Valley area of Yamhill County. The planning area is primarily undeveloped with the exception of a few single family dwellings and the wastewater treatment plant. The planning area encompasses the majority of the city's buildable land inventory. The City of Dundee initiated the master planning process in 2010 to provide a more detailed land use and transportation plan to guide coordinated development of this special area. The project was funded by a grant from the Oregon Transportation and Growth Management (TGM) Program consistent with Statewide Planning Goals that require cities to plan for future growth, including providing adequate land and facilities to meet long term (20–year) growth projections.

The Riverside District planning area features a number of unique assets and opportunities:

- A relatively small number of property owners and large parcels of undeveloped land, making master planning easier;
- A prime location along the Willamette River, with outstanding views of the river and surrounding areas in addition to access to water-based recreation;
- Natural resources that provide intrinsic natural values as well as amenities to future residents and visitors; and
- Community support for a creative, sustainable master plan and planning process.

The adopted Riverside District Master Plan reflects substantial input from the public involvement process, including opportunities for input from the major property owners. The Master Plan will guide future development of the planning area with a coordinated mix of residential, commercial, tourism and open space and recreational uses that are cohesive and connected with Dundee's larger community vision. The adopted Master Plan provides more detail regarding future development than can typically be provided through basic comprehensive plan designations and zoning. The Dundee Comprehensive Plan includes a new Riverside District plan designation and policies to provide a framework to implement the Riverside District Master Plan. Text of the Riverside District Comprehensive Plan Chapter is included in Appendix A of this Master Plan.

Adoption of the Master Plan concludes the following steps in a multi-step process required prior to development in the Riverside District:

1. Amendment of the Dundee Comprehensive Plan text to include a new chapter and policies relating to the Riverside District.
2. Amendment of the Comprehensive Plan Map to change existing designations for the Master Plan area from Agricultural, Residential, Commercial, Light Industrial and Public to the Riverside Plan District.
3. Adoption of the Riverside District Master Plan by reference as a support document to the Dundee Comprehensive Plan.

The City had initially hoped to amend the Development Code and the Zoning Map to apply the new Riverside District Zone (with seven subareas) to implement the master plan. However, following consideration of a March 2011 memo from the City's consulting engineer (Murray, Smith & Associates, Inc.) that documented the severity of the constraints on the existing water supply, the City decided to defer adoption of the Riverside District Zone and rezoning land in the Riverside District until more detailed infrastructure and financial plans are prepared to support the master plan, with a specific emphasis on water supply improvements.

The City will retain existing zoning that applies within the new Riverside District Plan designation for an interim period. Existing zoning is considered consistent with the Riverside District plan designation because existing zones allow less intensive, lower density development than anticipated in the Riverside District Master Plan. Uses and development allowed under existing zoning regulations will be allowed in this interim period, consistent with the provisions of the Dundee Development Code, statewide administrative rules and statutes, policies in the Riverside District Comprehensive Plan chapter, and any conditions of prior zone change approvals.

Additional land use approvals will be required prior to development to the scale and density envisioned in this master plan, including but not limited to:

- Development Code text amendment to adopt new Riverside District Zone;
- Zone change(s) to apply the new Riverside District Zone;
- Detailed master plans (by subarea) to establish local street network, identify specific park sites and trail connections, lay out blocks, refine mix of land uses and set mix of housing types and lot sizes, establish phasing schedule, etc.
- Subdivision(s) to divide land in accordance with detailed master plans; dedicate local streets parks and trail and utility easements; install public and private improvements, etc.
- Potential site design review for multi-family and non-residential buildings, unless clear and objective design standards are adopted as part of the detailed master plan for a particular subarea.
- Traffic analysis will be required as part of a zone change or site design review to document that the proposed phase of development is consistent with the overall trip thresholds outlined in the Master Plan.

This Master Plan document is divided into four sections:

I. **Background** – This section summarizes background information for the planning area, including project goals, public involvement and land use alternatives.

II. **Plan** – This section includes the key maps, figures and tables, including the Comprehensive Plan Map designation, the Master Plan (with land uses), the Street and Trail Plan, the Riparian Corridors, and typical street and trail cross-sections.

    Section II also includes the additional Master Plan policies that will be used by staff and the Planning Commission to review future development proposals (refinement plans and subdivisions) after the Riverside District Zone is implemented.

III. **Future Actions** – This section includes an Action Chart that identifies the issues that are left undecided, tasks left to do, or analysis that is still needed and recommended to be pursued after the plan is adopted. The Action Chart identifies action items, responsible party, and tentative time frame.

IV. **Appendices**
    - Appendix A – Adopted Riverside District Comprehensive Plan Chapter
    - Appendix B1 through B9 – Supporting Documents, including meeting summaries, land use alternatives report, charrette report, transportation analysis, and other background documents.

# I. Background

The Master Plan area was annexed to the City of Dundee in 1969. When the Dundee Comprehensive Plan was adopted in 1977, the planning area was designated for Agricultural use and placed in an Agricultural holding zone with policies stating that the land would be rezoned incrementally for residential use when need for the land was shown. In 2008, Dundee City Council approved a plan amendment and zone change affecting about 54 acres in the northerly portion of the planning area. However, the Council wanted to avoid incremental zoning of the larger area as called for in the Comprehensive Plan. As a condition of the plan amendment/zone change approval, the City Council required submittal and approval of a master plan prior to development of the subject property. During the public hearing process on the zone change, the City Council expressed interest in using the master planning process to ensure integrated planning and development of the Riverside Farms, LLC property and adjacent developable properties.

As described in the Executive Summary, the City initiated the master planning process in 2010 after receiving a grant from Oregon's Transportation and Growth Management Program. The master planning project was informed by an extensive community involvement process that included guidance from citizens and technical advisory committees, participation from property owners, public meetings, use of a project Web site (www.dundeeriverfront.net) and other means to inform community members about the process and public hearings associated with adoption of the plan. A key step in the planning process was a design charrette to identify land use and transportation plan alternatives for the Riverside District. The charrette, held October 10-14, 2010, resulted in the identification of a preferred land use and transportation concept for the planning area. A market study and a transportation analysis of the alternatives informed the selection of the preferred alternative. A report describing the charrette process and results is available on the project Web site and in Appendix B6.

A set of Master Plan goals and objectives was developed by the project management team and project advisory committees. These goals and objectives served as the criteria used to evaluate land use and transportation alternatives that were developed during the design charrette. The plan goals are presented below.

1. Conduct a fair and transparent master planning process.
2. Build on, enhance and communicate the unique characteristics of the planning area for the citizens of Dundee.
3. Allow for a mix of future land uses that meets the City's economic, housing and other needs.
4. Create an integrated land use and transportation system that is well-connected internally and to other parts of the city, incorporates a full range of ways to travel and is safe, efficient and sustainable.
5. Incorporate natural features and resources into the Master Plan in a way that protects key resources and enhances the value of the area for future residents.
6. Develop strategies for successful, efficient and cost-effective implementation of the Master Plan.
7. Address current and future public facility needs.

The Preferred Land Use and Transportation Alternative developed through this process forms the basis for the content of this Master Plan. The Master Plan elements are described in more detail in Section II. Existing conditions in the planning area have been presented in earlier reports and can best be summarized in terms of the general context of the planning area, existing zoning and land use, and natural resources and environmental conditions.

- **Planning area context**. The planning area is approximately 360 acres in size, located southeast of the developed portions of Dundee. It is almost as large as the rest of the city. It is approximately one-quarter mile east of OR 99W and bisected by the corridor for the planned Newberg Dundee Bypass. Overcrossings of the Bypass in the vicinity of 8th Street and Fulquartz Landing/Parks Street will provide connections between the developed area of Dundee and the riverfront area. However, the Bypass divides the planning area into several subareas and provides a barrier to greater connectivity.
- **Existing land use and zoning**. Most land in the planning area currently is in residential or agricultural use or is vacant. There are a total of 24 separate parcels in the area, ranging from 0.6 to 91 acres in size, with a total of nine dwellings. The city's municipal wastewater treatment facility is located roughly in the center of the planning area and includes a series of settling ponds and lagoons. A majority of the land in the planning area is currently zoned for agricultural use. In 2008, the city rezoned about 54 acres in the northern portion of the planning area for a combination of residential, commercial and light industrial uses.
- **Urban growth boundary and city limits**. Virtually the entire study area is included within the Dundee city limits. However, the Urban Growth Boundary (UGB) generally parallels the 150-foot elevation and about 97 acres abutting the Willamette River are located within the city limits but outside of the UGB. The area outside of the UGB is currently zoned for Exclusive Farm Use (EFU) on the Dundee zoning map, and some of the area is also within Greenway and Floodplain Overlays. Under Oregon's planning system, it is unusual to have land within the city limits but outside of the UGB.
- **Natural resources and environmental conditions**. The planning area features a variety of natural resources that provide value for Dundee residents and natural systems, while also representing restrictions to future use and development of some portions of the planning area. These include areas affected by flooding or the risk of floods, waterways such as streams and wetlands, steep slopes and unstable soil conditions.
  - Water Resources and Riparian Areas. The Willamette River is the dominant water feature adjacent to the planning area. Two main drainage swales extend from the Willamette River to the northwest into the Master Plan area. These two riparian areas are adjacent to current agricultural land uses and the wastewater treatment plant and have intermittent tree canopy.
  - Floodplains. The 100-year floodplain adjacent to the Willamette River is the principal water hazard related to flooding for the City of Dundee. The City's Development Ordinance regulates development within the floodplain and floodway.
  - Steep Slopes. Steep slopes often represent constraints to development, given the cost of addressing the hazards related to erosion and other soil movement and the resulting impacts on properties or resources below them. Much of the area is very flat, with slopes of less than 5%. However, there are sloped areas to the east of a ridge that is located at an elevation of about 150 feet. There also are sloped areas directly adjacent to the river and in the two drainage areas that extend northwest from the river.

A significant amount of information related to conditions within and related to the planning area is found in a separate Background Conditions report prepared for this project (Appendix B5) and available on the project Web site.

# II. The Plan

This section of the Master Plan provides the maps and policies to implement the conceptual land use and transportation framework.

Rather than apply and modify existing zoning regulations for the Master Plan, a new Riverside District Zone has been proposed to tailor specific land uses, densities, and development and design standards to the unique characteristics of this area. The maps and policies in this section and the provisions of the new Riverside District Zone, when adopted, will be used by staff and the Planning Commission to evaluate future land use proposals such as detailed master plans, subdivisions and site development review applications within the Riverside District boundary. The zoning regulations will be tailored to seven distinct subareas (A through G). As described in Section I, existing zoning will be retained in the interim period before the Riverside District Zone is refined and adopted, and zone changes approved based on the criteria in Chapter 3.102 of the Dundee Code.

The following figures are adopted as part of the Riverside Master Plan:

Figure 1 – Riverside District Land Use Plan

Figure 2 – Riverside District Subareas

Figure 3 – Riverside District Transportation Framework Plan

Figure 4 – Standard Cross Sections for Local Streets

Figure 5 – Standard Cross Sections for Parkway Collector and Collector Streets

Figure 6 – Riverside District Natural Resources and Riparian Areas.

Through the Riverside District planning process, a conflict was identified between the cross-sections for Local Street I in the Dundee TSP and the Dundee Development Code. The TSP allows a 26-foot paved section while the Development Code requires a 28-foot paved section.

ODOT has made a commitment to the City of Dundee to fund an update of the city's TSP starting in 2011. Through that process, the City expects to consider options for local street cross-sections and will assure that TSP and Code provisions are consistent. After the TSP and Code are updated, future development in the Riverside District may be able to take advantage of a wider variety of local street cross-sections. At a minimum, street trees will be a required feature for all streets in the Riverside District. Residential streets will typically have landscape strips for street trees. Commercial areas may have wider streets with trees planted in tree wells.

The established cross-section for the Parkway Collector in the TSP and Development Code will be maintained to help establish the special character for the collector road east of the Bypass that provides an important link between the two Bypass overcrossings and connectivity of several Riverside District Subareas. The "parkway" design features will help to reinforce the special character of the Riverside District. If the Parkway Collector parallels the Bypass, the wider multi-purpose path would only be required on one side adjacent to the development area.

Figure 1 - Riverside District Land Uses

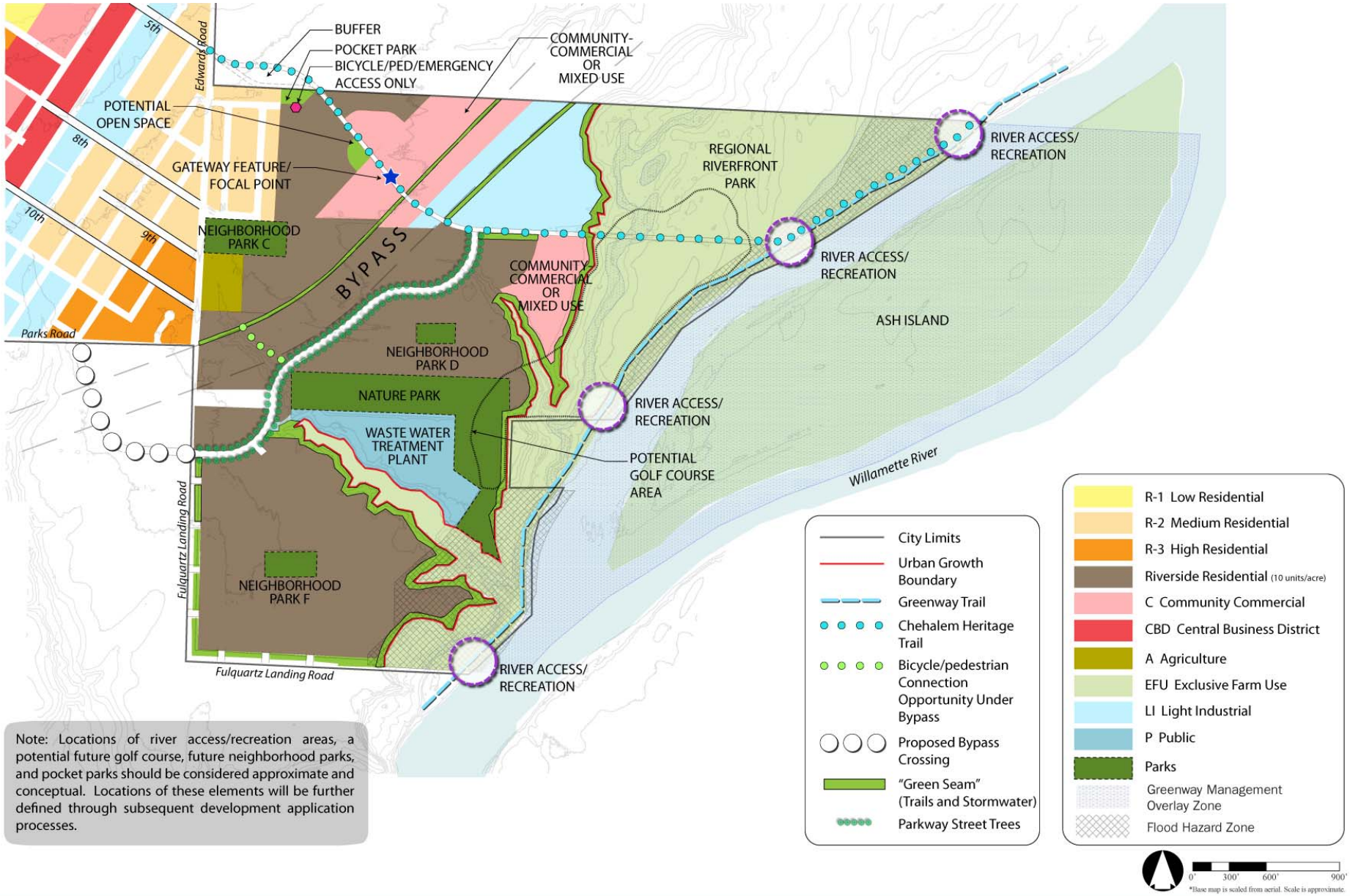


Note: Locations of river access/recreation areas, a potential future golf course, future neighborhood parks, and pocket parks should be considered approximate and conceptual. Locations of these elements will be further defined through subsequent development application processes.

Figure 2 - Riverside District Subareas

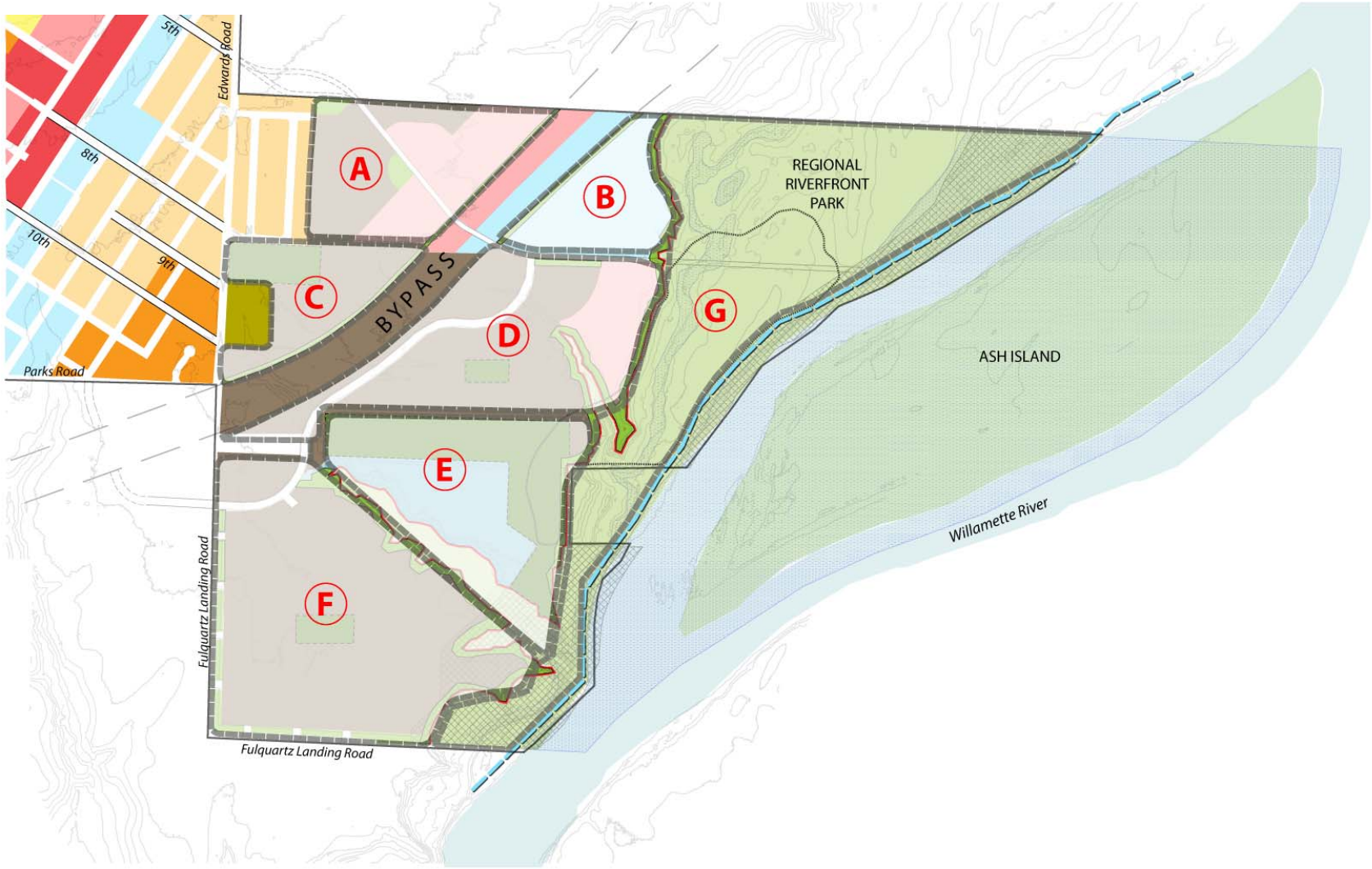


0' 300' 600' 900'
*Base map is scaled from aerial. Scale is approximate.

**Master Plan Subareas**

RIVERSIDE DISTRICT AND SUBAREAS MASTER PLAN - CITY OF DUNDEE

June 10, 2011

Figure 3 - Riverside District Transportation Framework Plan

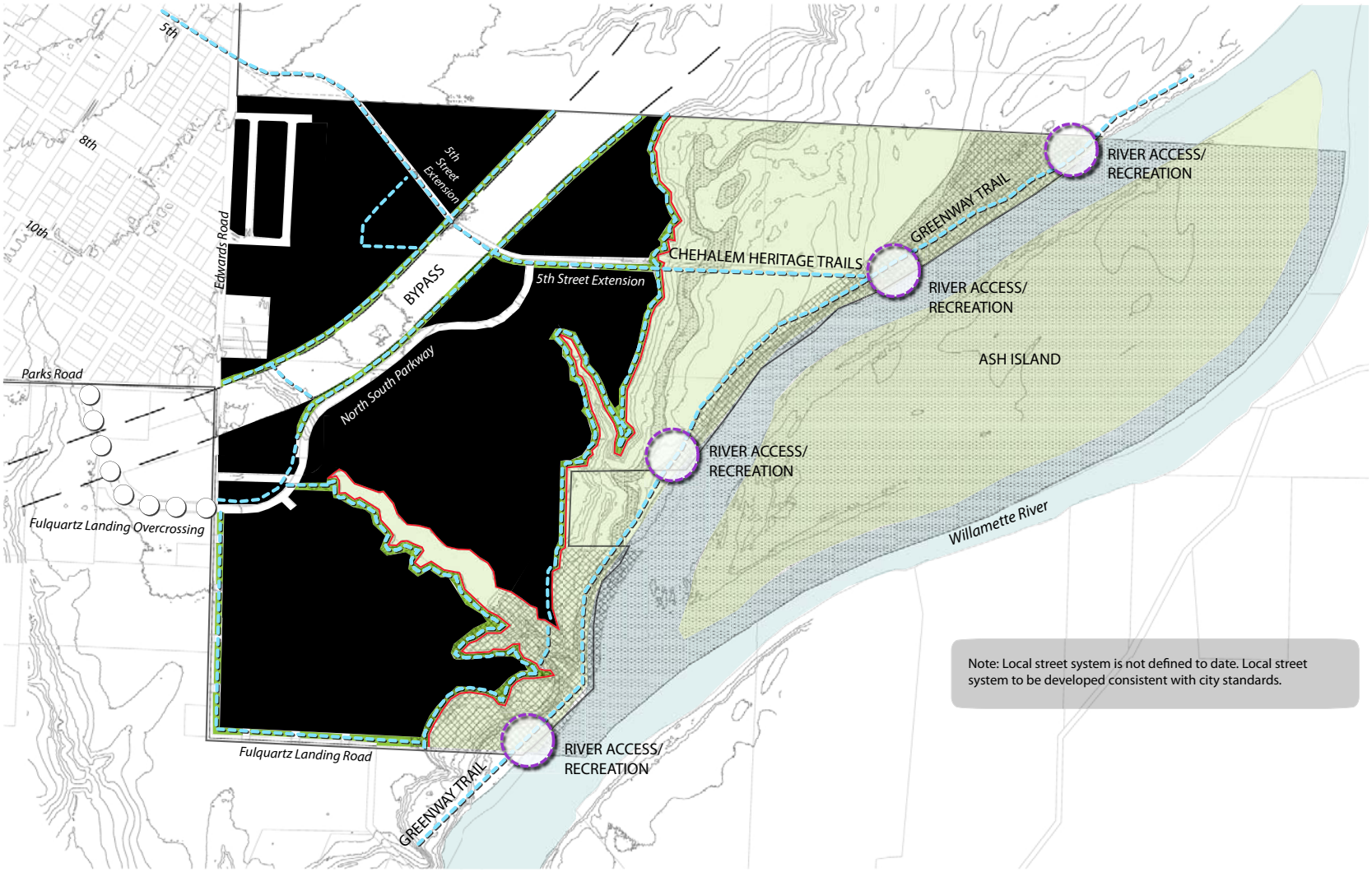


0' 300' 600' 900'

*Base map is scaled from aerial. Scale is approximate.

**Master Plan Transportation Context**

RIVERSIDE DISTRICT AND SUBAREAS MASTER PLAN - CITY OF DUNDEE

June 6, 2011

# Figure 4 - Standard Cross Sections for Local Streets

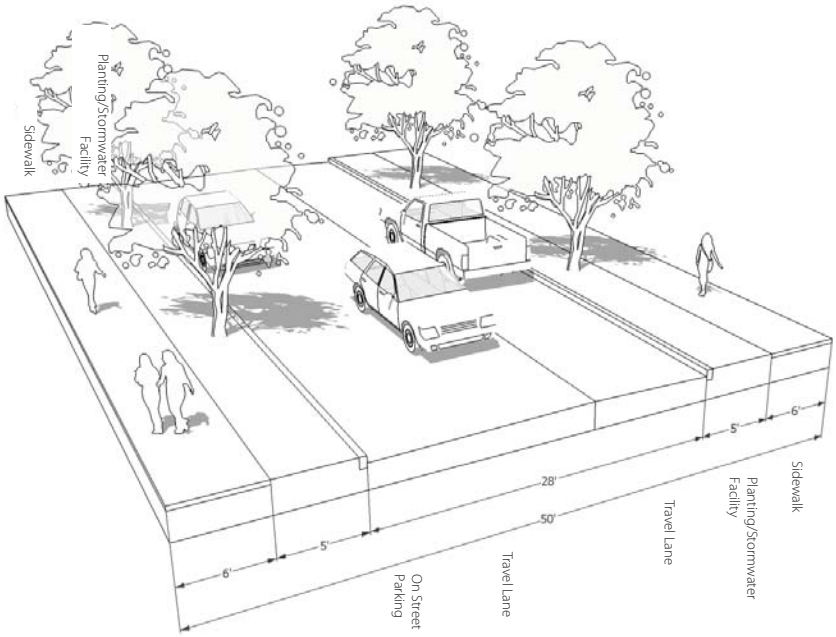


LOCAL STREET I - Two Travel Lanes with On-Street Parking on One side only

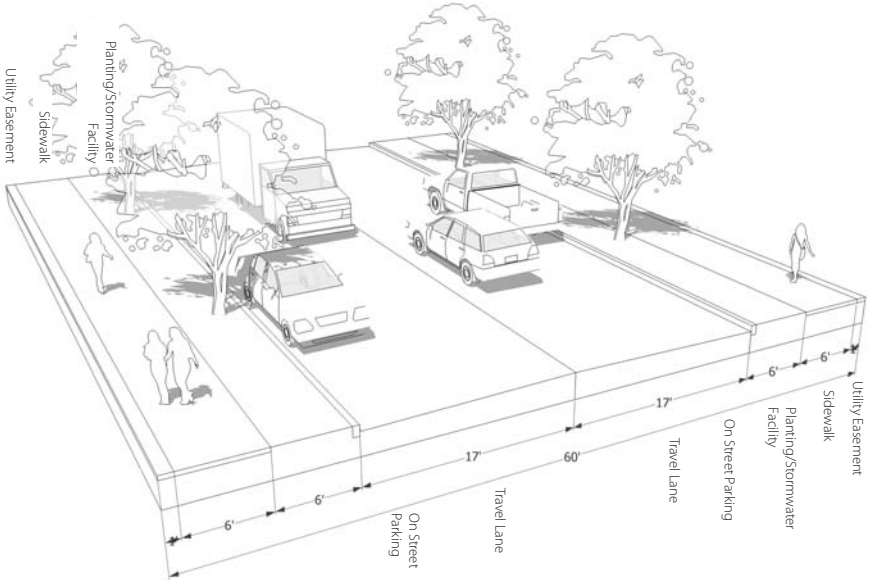


LOCAL STREET II - Two Travel Lanes with On-Street Parking on Both sides

Figure 5 - Standard Cross Sections for Parkway Collector and Collector Streets

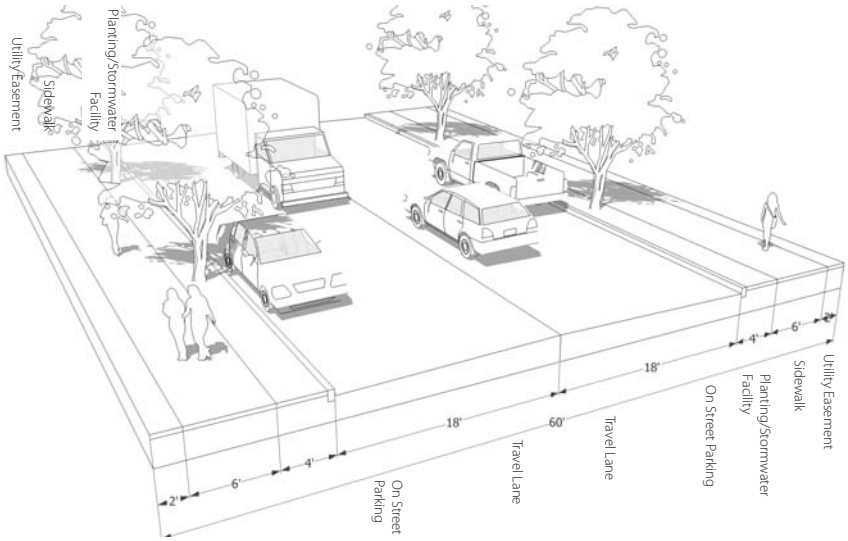


COLLECTOR - Two Travel Lanes with On-Street Parking Both Sides

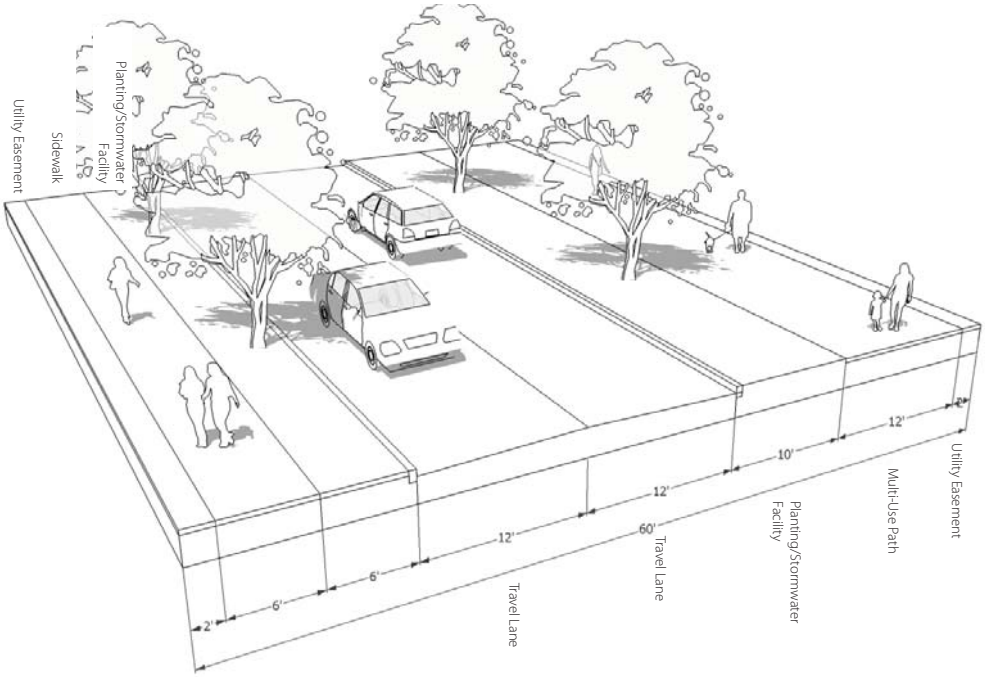


PARKWAY COLLECTOR - Two Travel Lanes with no On-Street Parking

Figure 6 - Riverside District Natural Resources and Riparian Areas

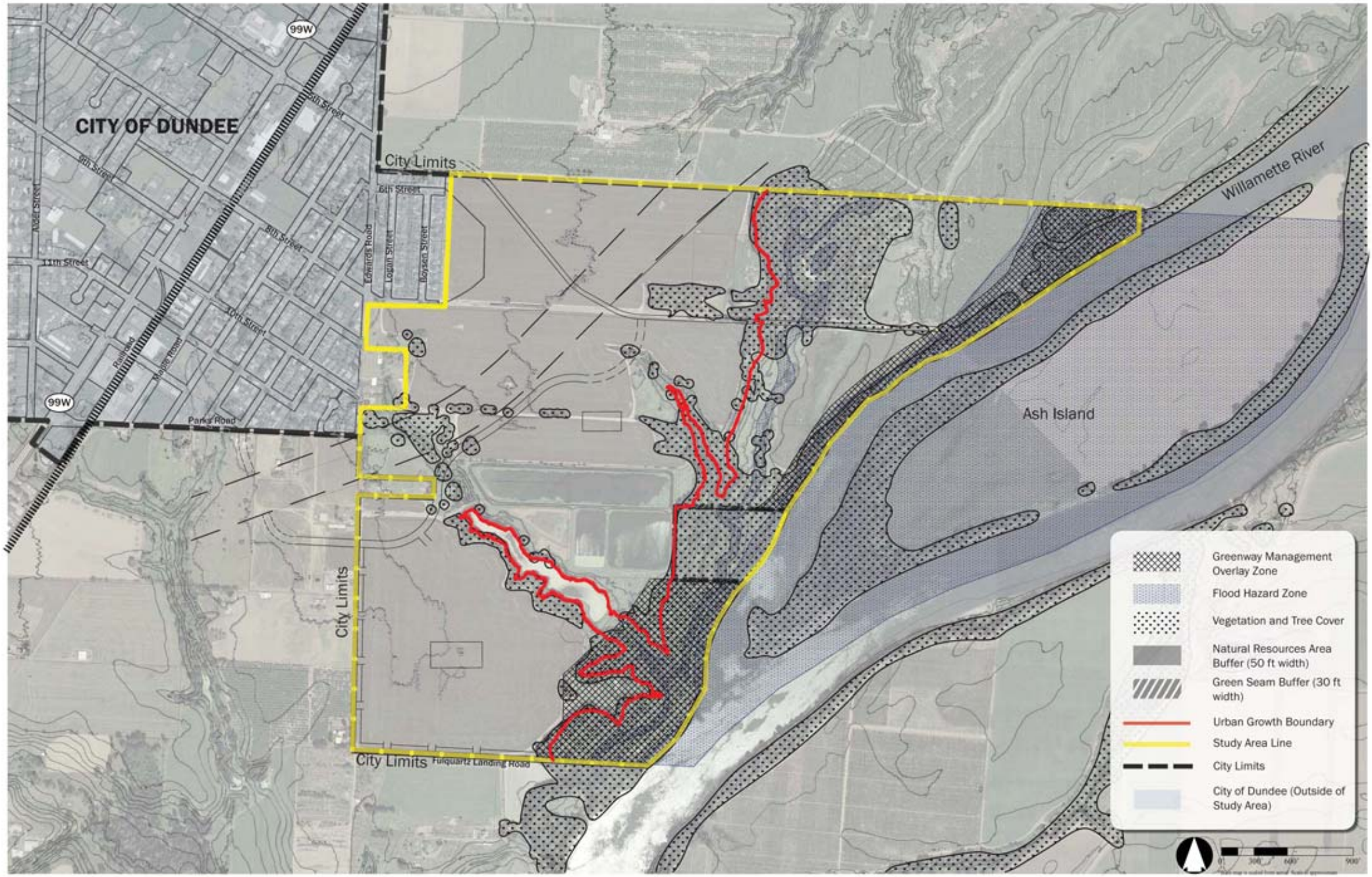


**Natural Resources and Riparian Areas - *Vegetated Buffers***

SOUTHEAST DUNDEE RIVERFRONT MASTER PLAN - CITY OF DUNDEE

June 6, 2011

## A. Plan and Zoning Designations

Figures 1 and 2 illustrate the boundaries of the new Riverside District and identify the boundaries of the seven subareas. The boundaries between the subareas were defined as follows:

- Used existing parcel boundaries between major property owners (Edwards, Lindquist and City of Dundee);
- Used the bypass corridor to identify boundaries of subareas to the west and east of the bypass; and
- Generally followed the 150-foot elevation line to define Subarea G (outside of the UGB). The only exception is provided for the two riparian corridors which are currently outside of the UGB, but will instead be protected under the Riverside District plan policies and future zoning.

Figure 1 provides the basis for the Comprehensive Plan Map amendments.

Primary land uses have been planned by subarea within the Riverside District Master Plan area. The allocation of land uses by subarea (including target number of housing units and maximum non-residential floor area) is shown in Tables 1 and 2 and provided the basis for the Master Plan transportation analysis shown in Table 5.

The allocation of housing units and non-residential floor area to Riverside District Subareas was based on the following assumptions:

- The number of housing units is consistent with population and housing projections assumed for the Riverside District in other reports and plans, including the 1999 Buildable Lands Inventory and Housing Needs Analysis, Wastewater Master Plan and Transportation System Plan.
- Higher densities and levels of development in the Riverfront District will help the city implement needed water, wastewater and transportation improvements and spread those costs over a larger number of households, thereby reducing the cost burden on existing city residents. Allowing for more density and development in this area is also important to provide and pay for trails, parks and other amenities within the planning area.
- The Master Plan assumes an average residential density of about 10 units per acre, with the flexibility to average lot sizes within a single development or over a larger subarea or several subareas. By providing broad flexibility to meet changing housing needs and market demands, the Master Plan provides opportunities for a mix of housing types to meet the City's overall housing needs and support required infrastructure and amenities.
- As summarized in the 1999 Buildable Lands Inventory and Housing Needs Analysis, the actual average housing density in Dundee was 4.7 dwelling units per net acre from 1985-1998. As stated in that report, it is clear that Dundee needs to zone additional land to meet the need for more affordable housing types at increased densities – especially as Dundee takes steps to provide more local employment opportunities. To provide for more affordable housing opportunities, the Housing Needs Analysis recommended that additional land be zoned for smaller single family lot sizes, row houses, manufactured dwelling parks and multi-family housing. Therefore, the Riverside District Master Plan is consistent with the recommendations from the 1999 Housing Needs Analysis because the plan establishes a higher average density for the Riverside District and provides broad flexibility for a mix of housing types and lot sizes.
- For the non-residential areas, typical floor area ratios were assigned to the acres designated commercial, mixed use and light industrial to arrive at the maximum non-residential floor area. The maximum non-residential floor area is possible based on standard zoning assumptions relating to parking and landscape requirements. However, the actual non-residential development in the Riverside District could be at a much smaller sale and will largely depend on market demand.

- The acreage designated for Commercial (14 acres) and Light Industrial (13 acres) uses in the Master Plan is generally consistent with the zone change approved for the Edwards property in 2008. The Master Plan identifies one additional area for Commercial or Mixed Use (8 acres) in Subarea D that is currently in the Agriculture holding zone.

General land uses for each subarea are described below and illustrated on Figures 1 and 2 on the following pages. The allocation of housing units and non-residential floor area by subarea is shown in Table 2.

**Subarea A**, located west of the Bypass corridor and north of 8th Street, includes a mix of planned commercial and residential uses along with pocket parks. The land uses in Subarea A are generally consistent with the uses approved as part of the 2008 zone change for River Farms, LLC, with some refinements in the location of certain uses. General land use categories for Subarea A are summarized below.

- Permitted residential uses include a mix of single-family detached units on relatively small lots, single-family attached units (e.g., townhouses or rowhouses) and some multi-family uses. Lower density residential uses are planned at the west edge of Subarea A for compatibility with adjacent development. A broader mix of housing types and higher densities are accommodated in the central portion of the Subarea. The Master Plan targets development of up to 110 residential units in Subarea A.
- Commercial and Mixed uses are located in the easterly portion of Subarea A, abutting the Bypass and higher density residential uses. The commercial use category accommodates a variety of retail, service and office uses. Drive-through facilities will be prohibited to foster a village scale. The Riverside District Zone may limit the footprint of individual buildings, require conditional use approval for buildings over a certain size (such as 10,000 or 20,000 square feet) and impose design standards. The Commercial and Mixed Use areas will provide flexibility for vertical and horizontal mixed use, including upper story residential or office over ground floor commercial and live/work units. The Master Plan allows development of up to approximately 147,000 square feet of non-residential floor area in Subarea A, assuming typical floor area ratios for commercial development. The actual amount and scale of commercial development may be lower, based largely on market demand.

**Subarea B**, located east of the Bypass corridor and north of 8th Street, is designated for light industrial use. Permitted uses in this area include food and beverage production and sales activities, which could include a "Vintner's Village" of independent wine production and tasting facilities and indoor and outdoor event space. Other permitted uses include eating and drinking facilities. The Master Plan envisions that uses in Subarea B will have a synergy with tourist, open space and recreational uses that take advantage of the riverside location east of the Bypass. The Master Plan allows development of up to 204,000 square feet of non-residential floor area in Subarea B, assuming typical floor area ratios for this type of development. The actual amount and scale of development in Subarea B may be lower, based largely on market demand.

**Subarea C**, located west of the Bypass corridor and south of 8th Street, is designated for residential uses and a neighborhood park. Permitted residential uses include a mix of single-family detached units on standard and small lots, single-family attached units (e.g., townhouses or rowhouses) and some multi-family uses. Lower density residential uses are planned at the west edge of Subarea C for compatibility with adjacent development. Residential densities are higher closer to the Bypass. The Master Plan targets development of up to 64 residential units in Subarea C.

The Master Plan identifies the location of a neighborhood park in Subarea C that will be dedicated with development. The park location reflects the amenity value of specimen Oak trees and is based on neighborhood park size and location criteria from the Dundee Parks and Open Space Plan. The size and location of the neighborhood park is conceptual and the precise location and size will be determined as part of a future development application process.

**Subarea D** includes a mix of residential, commercial and mixed use designations, as well as a possible golf course that may be located in the eastern portion of this subarea and extend into Subarea G. A neighborhood park is also required with development of this Subarea. Master Plan designations in this subarea include the following:

- A mixture of residential housing types and lot sizes, including single-family detached units on small to medium sized lots, single-family attached units (e.g., townhouses or rowhouses), duplex or tri-plex units and multifamily units. The Master Plan targets development of up to 277 residential units in Subarea D.

An area is identified for commercial or mixed use development in the northeast portion of Subarea D. Permitted uses include lodging, restaurants and recreation related uses, including a golf club house. The Master Plan envisions that uses in this commercial/mixed use area of Subarea D will have a synergy with tourist, open space and recreational uses that take advantage of the riverside location east of the Bypass. The Master Plan allows development of up to about 91,500 square feet of non-residential floor area in Subarea D. The actual amount and scale of commercial/mixed use development in Subarea D may be lower, based largely on market demand.

- The Master Plan also allows development of a golf course in a portion of Subarea D. A golf course is considered an appropriate use, but conditional use review is required to identify public access around and through a golf course to the riverfront. Because a specific location has not been defined, the acreage associated with a potential 9-hole golf course has not been deducted from the overall land inventory.
- The Master Plan identifies the conceptual location of a neighborhood park in Subarea D that will be dedicated with development, based on neighborhood park size and location criteria from the Dundee Parks and Open Space Plan. The precise location and size of the neighborhood park will be determined as part of a future development application process.

**Subarea E** includes the city's wastewater treatment plant (WWTP), approved treatment plant facilities, and a new nature park. All uses that are permitted outright or with conditional use approval in the Public (P) zone will be permitted in Subarea E. The Public zone permits the public facilities and park uses. Private golf and related facilities (such as a driving range) are identified as conditional uses in the Public zone.

**Subarea F** is designated for residential uses and a neighborhood park. Permitted residential uses include a mix of single-family detached units on small to medium sized lots, single-family attached units (e.g., townhouses or rowhouses), duplex and tri-plex units and multi-family units. The Master Plan targets development of up to 519 residential units in Subarea F. The Master Plan identifies the conceptual location of a neighborhood park in Subarea F that will be dedicated with development, based on neighborhood park size and location criteria from the Dundee Parks and Open Space Plan. The precise location and size of the neighborhood park will be determined as part of a future development application process.

**Subarea G** is currently located within the city limits but outside of the UGB. The Master Plan designates Subarea G for mixture of agriculture, parks, open space and recreational uses, including a regional riverfront park and trails, a possible 9-hole golf course and other open space areas. This area will remain zoned for Exclusive Farm Use by the City of Dundee until such time as it is brought into the city's UGB. All of the planned uses in this area are allowed in Dundee's EFU zone as outright or conditional uses, including a golf course. The Master Plan does not identify any housing, commercial or employment uses in Subarea G.

In April 2011, the Department of Land Conservation and Development (DLCD) indicated that golf courses are not allowed on high value farmland under state statutes and rules, even if the use is allowed under the City's EFU zone. This comment was brought up late in the process, and a golf course has been considered an appropriate use throughout the master planning process and was expressly discussed at the October design charrette for the Riverfront District. No changes to Dundee's acknowledged EFU zone are proposed as part of this process. The City of Dundee will support efforts to expand the UGB to coincide with the existing city limits and provide more appropriate zoning to accommodate the urban park, open space and recreational uses identified in the Riverside District Master Plan. The waterfront open space and recreational uses are integral to and needed to support the

overall development and open space vision of the Master Plan. Additionally, Yamhill County has recommended a UGB amendment that would accommodate the uses shown in the master plan and remove the on-going confusion regarding land use jurisdiction.

The following table summarizes projected acres of development by land use type, as well as target dwelling units, and square footage of retail, commercial, and industrial development for the Riverside District.

***Table 1 – Riverside District Land Uses***

| Locations/Designations | Acres | Percent[1] | Target Dwelling Units[3] | Maximum Floor Area of Development[4] |
|---|---|---|---|---|
| Inside urban growth boundary (UGB) | | | | |
| Residential | 100 | 38% | 970 | |
| Commercial | 22 | 8% | | 239,000 |
| Light Industrial | 13 | 5% | | 204,000 |
| *Subtotal* | *135* | *51%* | *970* | *443,000* |
| Neighborhood Park | 8 | 3% | | |
| Nature Park | 24 | 10% | | |
| Roads (excluding Bypass) | 29 | 11% | | |
| Trails/green seams | 23 | 9% | | |
| Newberg Dundee Bypass corridor | 27 | 10% | | |
| Wastewater treatment plant[2] | 17 | 7% | | |
| *Subtotal (Inside UGB)* | *263* | *73%* | | |
| Outside UGB (open space or recreation) | 97 | 27% | | |
| **Total Planning Area** | **360** | **100%** | **970** | **443,000** |

Notes

1. Percentages are as a total of land within the UGB except the Subtotal and land outside the UGB.

2. A small portion of the treatment plant acreage reflected in this number is outside the UGB; acreage does not include potential turtle habitat areas south of Lagoon #4 (Canyon Lake)

3. Assumes a mix of housing types and an overall average density of about 10 units/acre.

4. Assumes floor area ratios of 0.25 for commercial and mixed use and 0.35 light industrial and hotel uses.

***Table 2 – Target Dwelling Units and Non-Residential Floor Area by Subarea and Land Use***

| Subarea | Land Use Designation | Acres | Target Dwelling Units | Max. Non-Residential Floor Area |
|---|---|---|---|---|
| A | Commercial | 14 | 14 | 147,500 |
| A | Residential | 13 | 96 | NA |
| B | Light Industrial | 13 | NA | 204,000 |
| C | Residential | 11 | 64 | NA |
| D | Commercial/Mixed Use | 8 | NA | 91,500 |
| D | Residential | 23 | 277 | NA |
| E | Public | 41[1] | NA | NA |
| F | Residential | 53 | 519 | NA |
| G | Agricultural, Open Space and Recreation | 97 | NA | NA |
| **TOTAL** | | **273[2]** | **970** | **443,000** |

Notes

1. Acreage includes approximate area of WWTP and planned Nature Park

2. This total does not include the area estimated for neighborhood parks, trails, roads and the Bypass corridor, shown in Table 1.

## B. Riverside District Policies

After the adoption and implementation of a new Riverside District Zone, the following policies will apply to Planning Commission review and approval of detailed master plan(s) and subdivision(s) of individual or consolidated subareas within the Riverside Master Plan District. The detailed master plan and subdivision reviews will be key steps in setting the stage for specific development of each subarea because they will:

- Establish and dedicate the local street system;
- Identify the specific location and size of neighborhood park(s) identified in the Master Plan and dedicate the planned park(s) in conjunction with the subdivision;
- Confirm that the number of residential lots is consistent with the overall target residential units;
- Layout infrastructure (particularly water and sewer) to accommodate the proposed subdivision and identify improvements needed to assure adequate public facilities; and
- Include a simple traffic analysis to assess the trips and required transportation improvements based on the overall transportation analysis completed for the Master Plan.

The policies will also apply to discretionary review of conditional uses, site design review and amendments of the Riverside District Master Plan. However, the policies will not apply to the review of individual building permits for development on platted lots that is consistent with the use tables and design standards of the Riverside District Zone once it is adopted.

### *Land Use*

As shown in Figure 1, the Riverside District Master Plan envisions the long-term development of a cohesive district that includes a mix of land uses and housing types served by an interconnected of “complete” streets

with planter strips, street trees and sidewalks. A substantial portion of the Riverside District will be devoted to park, open space and a trail network that will serve both the Riverside District and the larger community and provide a unique amenity for development. Non-residential development is targeted to the northerly 1/3 of the Riverside District. It is envisioned that commercial uses to the west of the Bypass will be smaller-scale neighborhood commercial uses. Non-residential uses to the east of the Bypass are envisioned to be larger-scale "destination" uses such as wineries, event facilities, hotel, restaurants and related uses.

1. The Riverside District Master Plan identifies the approximate location and acres of general land use categories by subarea (See Figure 2 and Table 2). Through the detailed master plan and subdivision process, the applicant shall have the ability to propose minor changes between the boundaries of the use areas, consistent with the overall target housing units and non-residential floor area allocated to the subarea.
2. When a partition or subdivision application is submitted for a subarea, even if it only includes a smaller first phase of development, a detailed master plan shall be submitted for the entire subarea to show the layout of streets and more precise location of the neighborhood park (if a conceptual location is shown on the approved Master Plan for the Subarea). The detailed master plan will provide the tool to track the target housing units and maximum non-residential floor area consistent with the allocations by subarea in Table 2.
3. A mixture of different building types is encouraged within the residential areas (e.g. single family residential, duplex, attached single family residential, multi-family). Outside of the overall target number of housing units specific for each subarea, it is expected that the Riverside District Zone will provide broad flexibility for a mix of housing types and lot sizes. The detailed master plan shall identify lots intended for attached and multifamily housing. To ensure efficient use of land in the Riverside District, an average density of 10 units per acre is established. Lot sizes may be averaged and densities may be shifted between subareas to provide flexibility to meet changing housing and market needs.
4. Development within subareas designated for commercial, mixed use and light industrial uses in Subareas A, B and D shall be consistent with the standards included in the Riverside District Zone (when adopted), including limitations on certain uses, maximum building size and basic design standards.
5. The approved Master Plan assumed certain categories of commercial and light industrial uses would be appropriate in the Riverside District. While the Riverside District Zone will provide some flexibility for the City to allow "similar uses" through a Type I-B review, a major change in the list of permitted and conditional uses will require Type II Planning Commission approval or a Type IV Development Code text amendment.
6. The Master Plan identifies a conceptual location for a potential golf course. While a golf course is considered an appropriate use in the Riverside District, conditional use approval is required to review the layout of the golf course relative to public trails and access to the riverfront. Additionally, conditional use approval is required for any portion of the golf course located within Dundee's Exclusive Farm Use (EFU) zone. Through the conditional use review process, the City shall also encourage the use of recycled wastewater or on-site water sources for golf course irrigation to avoid pressure on the City's domestic water supply sources. Based on input from the Department of Land Conservation and Development, development of a golf course on Dundee's designated EFU land may require a goal exception or UGB amendment.
7. The City will support a future UGB amendment application to include Subarea G within Dundee's UGB to accommodate the open space and recreational uses identified in the Riverside Master Plan. The location of this subarea inside of the city limits but outside of the UGB complicates land use jurisdiction.
8. If the School District identifies a need for future school(s) within the Master Plan area, appropriate site(s) shall be identified consistent with the policies of the Dundee Comprehensive Plan and/or School District Facility Plan.

9. The Riverside District Master Plan does not designate potential school sites and the transportation analysis did not assume development of a school in any of the subareas. At a minimum, development of a public school within the Riverside District would require conditional use approval and a full traffic analysis.

## *Transportation*

The main elements of the Riverside District transportation system are shown in Figure 3. This figure shows the approximate location of the two overcrossings of the Bypass that will be built by ODOT. The approximate location of the "Parkway Collector" is also shown to the east side of the Bypass. The local street system for the Riverside District will be defined as part of subsequent land use applications, based on established code standards for street connectivity and maximum block length.

1. The Riverside District Master Plan accommodates the development of the Bypass in the location shown in the Tier 2 Draft Environmental Impact Statement (Tier 2 DEIS) and the Dundee TSP. ODOT shall acquire all right-of-way needed for the Bypass and the overcrossings and construct the facilities.
2. The City and the affected property owners will continue to coordinate with ODOT on the location and design details for the overcrossings and landscaping of the berms. The City will advocate for a design that maximizes the developable area in the Riverfront District and reduces the visual impact of the Bypass.
3. An interconnected street system shall be provided within and between residential, commercial, and mixed use areas. Because local streets may be extended on an incremental basis in some subareas, it may be necessary to accept temporary dead-ends or "stub streets" that will be extended when future development occurs.
4. All streets shall be built to established standards for street connectivity and block length as set forth in Chapter 2.202 of the Development Code. Street standards in the Riverside District Zone shall supersede TSP or Development Code standards where they conflict.
5. The collector to the east side of the Bypass shall be developed to a "parkway" standard to integrate the subareas and help establish the overall design character of the Riverside District. In addition to providing internal connections east of the Bypass, construction of this road will ensure that all subareas east of the Bypass would have two ways to cross the Bypass, which is important for safety and emergency service reasons.
6. Street trees shall be required in all subareas of the Riverside District. Street trees shall be installed and maintained to the standards specified in the Development Code.
7. No private streets shall be allowed in the Riverside District.
8. Developers will be allowed and encouraged to construct green street features on local and collector streets to reduce the amount of stormwater entering local rivers and streams, reduce demand on the city's infrastructure and improve water quality. Modifications to street standards will be allowed without a variance at the subdivision phase if a developer proposes green street features that are approved by the City Engineer and Planning Commission.
9. Where cul-de-sacs are constructed, they shall comply with the maximum length standards in Section 2.202 of the City of Dundee Development Code. A pedestrian and bicycle connection may be required between the end of the cul-de-sac and the nearest local street to provide connectivity.
10. Sidewalks shall be provided along both sides of all streets. Where a wider multi-use path is provided (for example, on the side of the Parkway Collector adjacent to the Bypass or on the urban side of the Fulquartz Landing Road frontage), the multi-use path shall replace the required sidewalk.
11. A pedestrian/bicycle pathway shall be accommodated under the Bypass structure located near 10th Street to provide an ADA accessible connection between Dundee and the Riverside District. The City of Dundee may

pursue grants to fund construction of this undercrossing. ODOT has committed that the Bypass design will accommodate the pedestrian/bicycle pathway.

## Water, Wastewater and Stormwater

Water, wastewater and stormwater facilities that are needed to support proposed development in the Riverside District will require further planning of needed improvements, updates of city system development charges (SDCs) and other fees, and coordination between the city and property owners regarding the timing and funding of infrastructure improvements. The types of improvements required to serve the Riverside District are described in more detail in the Land Use Alternatives Report in Appendix B7 and the Cost Estimates, Funding Strategies and Responsibilities document Appendix B9 (adopted by reference).

1. Public facilities for the Riverside District shall be planned, designed and constructed in accordance with adopted Public Facility Master Plans for water, wastewater and stormwater.
2. Each subdivision or development application shall show that its water, wastewater and stormwater requirements can be met adequately by infrastructure that is in place or will be in place at the time of occupancy. The City Engineer shall review and confirm the adequacy of infrastructure plans prior to City approval of the land use application. As a general policy, the City requires that developers bear the cost of infrastructure improvements required to support their project.
3. As authorized by ORS 94.504, the City may require City Council approval of Development Agreements as a condition of subdivision or development application approval to allow the city and an applicant to coordinate in the provision of facilities to serve the development. The Development Agreement may require specific performance conditions for development of the property. These performance conditions may include, but are not limited to, construction of public facilities, dedication or reservation of land for right-of-ways, easements, or parks, or other conditions proper for the development.
4. Planning for water use should incorporate techniques and systems for water reuse and conservation to the greatest degree practical, including potential reuse of wastewater for irrigation or other purposes.
5. The City will encourage natural stormwater drainage systems designed to manage and filter as much stormwater on site as reasonably possible and to incorporate natural drainage and management techniques. Examples and illustrations of low impact development approaches that may be appropriate in the Riverside District are included in the Background Conditions Report, Charrette Report, and Land Use Alternatives Report in Appendix B.

## Parks, Open Space and Trails

Figure 1 illustrates the park and open space framework for the Riverside District, including planned neighborhood parks, a regional riverside park, a nature park, and a connected trail system to access the river and connect the various subareas. Figure 6 highlights natural resource and riparian areas and identifies the general location of the riparian buffer (50 foot width) and green seam buffer (30 foot width).

1. A minimum of three neighborhood parks shall be established within Subareas C, D, and F as shown in Figures 1 and 2 of the Riverside District Master Plan and based on the housing target of 970 dwelling units. The specific location and size of each neighborhood park shall be refined through the detailed master plan and subdivision process. However, each neighborhood park site shall be consistent with the location and size criteria in the adopted Dundee Parks and Open Space Master Plan and the Neighborhood park sites shall be developed in accordance with the provisions of the Parks and Open Space Zone (Chapter 2.111) of the Development Code. The City shall collaborate with Chehalem Parks and Recreation District (e.g. IGA) on Riverside District park and trail issues such as dedication, improvements, standards, maintenance, etc.

2. A regional riverside park is planned in Subarea G as shown on Figure 1. The existing sloped, wooded area within the riverside regional park area shall generally be protected in a natural state as part of future park development. This wooded area may contain trails or other passive recreational facilities (e.g., interpretive features).
3. Planning for the regional riverside park shall be coordinated between the City of Dundee and the Chehalem Park and Recreation District. Additionally, planning shall include coordination with the Oregon Department of Parks and Recreation to ensure opportunities to connect to a potential future state park on Ash Island, should such a park be developed.
4. Figure 1 of the Riverside Master Plan shows development of a "nature park" on city-owned property to the north of the wastewater treatment plant facilities. Development of this park should be consistent with the conceptual park plan approved by the City Council.
5. The Riverside District Master Plan establishes a buffer around the Canyon Lake Natural area, extending to approximately the 150-foot elevation line to the south and west of this area (see Figure 6). Within this area, human access and activity will be restricted to help protect habitat for two turtle species – the Western Painted and Western Pond Turtles. In addition, a secondary, additional riparian buffer of approximately 50 feet is established beyond the 150-foot elevation line, within which uses will be limited to natural resource protection, open space and passive recreation, such as walking and bicycling. A pedestrian and bicycle pathway may be constructed within this riparian buffer area.
6. The Riverside District Zone will protect riparian areas by using a regulatory approach consistent the State of Oregon's Goal 5 safe harbor approach (50 foot setback from top of bank), and by allowing developers (if they want an alternative to the safe harbor approach) to inventory riparian and other natural resources and identify alternative measures to protect them, consistent with the goals and requirements of the this Master Plan, as well as the city's Comprehensive Plan and Development Code.
7. A linked trail system shall be developed within the Riverside District and integrated with plans for the Willamette Greenway Trail and Chehalem Heritage Trail as shown on Figures 1 and 3. Through the subdivision and development permit process, the City of Dundee may require dedication or easements to accommodate the development of the trail system. In general, 30-foot wide easements will be adequate to accommodate 10-foot wide multipurpose trails. As noted above, a wider 50-foot easement will be required along the designated riparian corridors.
8. Locations of trail connections and associated riverfront recreational opportunity areas are conceptual and will be further detailed as future Action Items.
9. The City will support "green" development approaches, including co-location of stormwater swales in parks and along linear trail corridors to reduce land needs and costs and create opportunities for education, amenities, and recreational activities.

## C. Implementation

### *Land Use and Development*

Development of the Riverside District Master Plan is expected to occur over an extended period of time, given that land in the planning area represents a 20-year supply of buildable land based on future population projections for Dundee. Development of subareas A and C west of the Bypass is likely to occur first, given proximity to existing city transportation facilities and other municipal services. Development of a golf course in the eastern section of the planning area (portion of subareas D and G) could also occur earlier given that it would require limited public facilities in comparison to other land uses designated east of the Bypass corridor.

Development within the Master Plan area will be dependent on the ability to provide needed public infrastructure and services, including water, wastewater, stormwater and transportation facilities. General phasing objectives include the following, some of which are described in more detail in Section III Action Charts.

- A new Riverside District zone will be adopted to implement the Master Plan.
- When the Riverside District Zone is adopted, the City Council may condition approval of zone changes to the Riverside District Zone based on availability of adequate public facilities. A similar condition was attached to the 2008 approval of the plan amendment/zone change for Riverside Farms, LLC.
- Water, wastewater and stormwater facilities should be sized to accommodate projected total future levels of development. Reimbursement agreements, a Riverside District System Development Charge, development agreements or other mechanisms may be needed to ensure equitable arrangements for funding these facilities.
- Roads should be sized and constructed per the classifications and standards identified in this Plan and the City's TSP. Where development is proposed on only one side of a road, a half-street or three-quarter street improvement may be allowed if it provides adequate capacity and connectivity for automobile, bicycle and pedestrian travel.

## *Transportation Facilities and Improvements*

Phasing of transportation facilities and improvements will be related to a number of factors, including coordination with construction of the Bypass; implementation of needed improvements to facilities outside the planning area, including OR 99W, Fulquartz Landing, Edwards and Parks Drives and 5th and 8th Streets; and construction of a new parkway collector road east of the Bypass corridor. The Phasing Analysis documented below provides the City and ODOT with traffic volume thresholds that will trigger transportation improvements. This phasing analysis is intended to facilitate the timely construction of transportation facilities as their need arises, thereby relieving the need to perform individual traffic studies for each component of development. The City may choose to monitor traffic on the major transportation facilities serving to access the Southeast Dundee area, so as to better understand the imminence of approaching transportation needs. Phasing requirements and issues include the following:

- To the extent that development in the Riverside District occurs prior to construction of the Bypass, it must not preclude or interfere with eventual construction of the Bypass.
- The 8$^{th}$ Street right-of-way may continue to be used as a means of connecting the portions of the Master Plan area on either side of the Bypass corridor, prior to construction of the Bypass.
- Implementation of the 5$^{th}$ Street Extension will require approval of a statewide exception to Goal 3 (Agricultural Lands) or a minor UGB amendment. Prior to or in lieu of the 5$^{th}$ Street Extension, a combination of 8$^{th}$ Street (east of Edwards Road), Edwards Road (north and south of 8$^{th}$ Street) and 5$^{th}$ Street are likely to be used as the primary routes from the northern portion of the planning area to OR 99W. Use of these roads will necessitate the following interim transportation improvements (or improvements to be made in lieu):
    - Improvements to Edwards Road to meet Collector Street standards, including the provision of sidewalks, will be needed when development in Subareas A-D results in approximately 250 net new trips along Edwards Road (north and south of 8$^{th}$ Street) during the weekday p.m. peak hour. (See Table 3-6 for more information). These improvements should be constructed as new development along Edwards Road occurs, consistent with section 2.206 of the Dundee Development Code.
    - Improvements to 5th Street to meet Collector Street standards between OR 99W and Edwards Road will be needed when development in Subareas A-D results in approximately 200 net new trips along 5$^{th}$ Street during the weekday p.m. peak hour (see Table 3-6 for more information).

- Addition of a westbound right turn lane at the intersection of OR 99W/5th Street ($100,000) will be needed if development in Subareas A-D results in approximately 24 net new trips at the intersection during the weekday p.m. peak hour prior to construction of the Newberg Dundee Bypass. If this threshold of 24 additional trips is not met prior to construction of the Bypass, this improvement will not be needed.

- Construction of the planned Bypass overcrossing connecting to the 5th Street Extension will require that local infrastructure be in place first. This could include implementation of the 5th Street Extension or the interim improvements described above, as well as the extension of 8th Street to the east of the Bypass.
- The 5th Street Extension or a connecting link to the Bypass overcrossing should be fully constructed when the Bypass is constructed.
- As development occurs within the Master Plan area, construction of the planned North/South Parkway Collector east of the bypass corridor must be phased in such a way as to provide adequate connectivity both within the Master Plan area and between areas east and west of the future Bypass facility. Phasing should be as follows:
  1. If this road is constructed before construction of the Bypass:
     a. The road shall be partially constructed as frontage development of the collector is complete; or
     b. The road shall be fully constructed when 100% of development in Subarea D is complete, or
  2. If the road is constructed after or during construction of the Bypass and the Bypass construction severs connections between Subarea D and access to either 5th Street, 8th Street or Parks Drive, then ODOT must have a temporary detour plan in place to provide access between Subarea D and these facilities (5th, 8th or Parks).
- If Subareas D or F are developed before the Bypass is constructed, traffic from those developments would utilize Fulquartz Landing and Parks Drives to access OR 99W.
- Improvement of Parks Drive to a collector street standard, including the provision of sidewalks, will be needed when developments in Subareas A-G result in approximately 275 net new trips along Parks Drive during the weekday p.m. peak hour (see Table 3-6 for more information).
- Construction of a new traffic signal at Parks Drive and OR 99W will be needed when full build-out of Subareas A-G occurs with or without development of the Bypass, or when warranted (all new traffic signals must be approved by the state traffic engineer).
- Railroad crossings:
  - Railroad crossing improvements along 5th Street will be needed when development in Subareas A-D result in approximately 200 net new trips along 5th Street during the weekday p.m. peak hour (see Table 3-6 for more information).
  - Railroad crossing improvements at Parks Drive will be needed when development in Subareas A-G result in approximately 275 net new trips on Parks Drive during the weekday p.m. peak hour (see Table 3-6 for more information).

    *The threshold used to determine the phasing of these improvements relates to the point in time that traffic exceeds the volume guideline for a collector street, 3,000 vehicles per day (vpd), as defined in the Dundee TSP. (Note: A "Diagnostic Investigation", conducted in coordination with ODOT Rail, ODOT Highway, City, and rail providers, should be conducted in which these entities will establish the threshold for construction of rail improvements).*

The following tables summarize the assumptions and analysis used to estimate thresholds for needed transportation improvements within and outside the study area. Proposed land uses have been translated into total numbers of trips by subarea or a combination of subareas. These trips have in turn been distributed and assigned to the study area roadways.

***Table 3 – Riverside District Land Uses by Subarea***

| Land Use | Subarea A | Subarea B | Subarea C | Subarea D | Subarea E | Subarea F | Subarea G | Total |
|---|---|---|---|---|---|---|---|---|
| Single family residential (units) | 96 | 0 | 24 | 222 | 0 | 415 | 0 | 757 |
| Multifamily residential (units) | 14 | 0 | 40 | 55 | 0 | 104 | 0 | 213 |
| Commercial and retail (sq ft) | 131,500[5] | 0 | 0 | 91,500[3] | 0 | 0 | 0 | 223,000 |
| Golf course[4] (holes) | 0 | 0 | 0 | 9 | 0 | 0 | 0 | N/A |
| Light industrial[2] (sq ft) | 0 | 204,000 | 0 | 0 | 0 | 0 | 0 | 204,000 |
| Neighborhood park (acres) | 4 | 0 | 0 | 2 | 0 | 2 | 0 | 8 |
| Regional & nature park (acres) | 0 | 0 | 0 | 0 | 25 | 0 | 30 | 55 |

[1] Golf course includes 9-holes and a club house/pro shop.
[2] Light Industrial includes wine tasting and production.
[3] Overall square-footage includes 50 hotel rooms.
[4] The clubhouse is located in Subarea D.
[5] The 14 multifamily residential units represent the remaining 16,000 square-feet of commercial and retail space shown in Table 2 above.

***Table 4 – Trip Generation Rates***

| Land Use | ITE Code | Trip Rate (PM Peak Hour) | Percent In | Percent Out |
|---|---|---|---|---|
| Single family residential (units) | 210 | 1.1 | 63% | 37% |
| Multifamily residential (units) | 230 | 0.78 | 67% | 33% |
| Hotel use (rooms) | 310 | .59 | 53% | 47% |
| Commercial and retail (sq ft) | 820 | 3.73 (1,000 sq ft) | 49% | 51% |
| *- Internal* | | *40% of trips* | *50%* | *50%* |
| *- Pass by* | | *10% of trips* | *50%* | *50%* |
| Golf course[1] | 430 | 2.78 | 45% | 55% |
| Light industrial[2] (sq ft) | 110 | 0.97/2[3] (1,000 sq ft) | 12% | 88% |
| Neighborhood park (acre) | 412 | 0.59 | 35% | 65% |
| Regional & nature park (acre) | 417 | 0.26 | 44% | 56% |

[1] Golf course is assumed to include 9-holes and a club house/pro shop.
[2] Light Industrial is assumed to include wine tasting and production.
[3] It is assumed that this use will generate approximately half as many trips as traditional light industrial uses.

Table 5 shows the estimated weekday p.m. peak hour trips generated by each land use within subareas.

***Table 5 – Estimated Riverside District Trip Generation – Weekday PM Peak Hour***

| Land Use | Subareas A | | | Subarea B | | | Subarea C | | | Subarea D | | | Subarea F | | | Total | | |
|---|---|---|---|---|---|---|---|---|---|---|---|---|---|---|---|---|---|---|
| | **In** | **Out** | **Total** | **In** | **Out** | **Total** | **In** | **Out** | **Total** | **In** | **Out** | **Total** | **In** | **Out** | **Total** | **In** | **Out** | **Total** |
| Single family residential | 67 | 39 | 106 | 0 | 0 | 0 | 16 | 10 | 26 | 154 | 90 | 244 | 288 | 169 | 457 | 525 | 308 | 833 |
| Multifamily residential | 7 | 4 | 11 | 0 | 0 | 0 | 21 | 10 | 31 | 29 | 14 | 43 | 54 | 27 | 81 | 111 | 55 | 166 |
| Hotel use | 0 | 0 | 0 | 0 | 0 | 0 | 0 | 0 | 0 | 16 | 14 | 30 | 0 | 0 | 0 | 16 | 14 | 30 |
| Commercial and retail | 269 | 280 | 549 | 0 | 0 | 0 | 0 | 0 | 0 | 28 | 29 | 57 | 0 | 0 | 0 | 297 | 309 | 606 |
| *- Internal* | *(110)* | *(110)* | *(220)* | *0* | *0* | *0* | *0* | *0* | *0* | *(11)* | *(11)* | *(22)* | *0* | *0* | *0* | *(121)* | *(121)* | *(242)* |
| *- Pass by* | *(16)* | *(16)* | *(32)* | *0* | *0* | *0* | *0* | *0* | *0* | *(2)* | *(2)* | *(4)* | *0* | *0* | *0* | *(18)* | *(18)* | *(36)* |
| Golf course[1] | 0 | 0 | 0 | 0 | 0 | 0 | 0 | 0 | 0 | 11 | 14 | 25 | 0 | 0 | 0 | 11 | 14 | 25 |
| Light industrial[2] | 0 | 0 | 0 | 12 | 87 | 99 | 0 | 0 | 0 | 0 | 0 | 0 | 0 | 0 | 0 | 12 | 87 | 99 |
| Neighborhood parks | 1 | 2 | 3 | 0 | 0 | 0 | 0 | 0 | 0 | 0 | 1 | 1 | 0 | 1 | 1 | 1 | 4 | 5 |
| Regional & nature parks[3] | 0 | 0 | 0 | 3 | 4 | 7 | 0 | 0 | 0 | 3 | 4 | 7 | 0 | 0 | 0 | 6 | 8 | 14 |
| **Total** | **218** | **199** | **417** | **15** | **91** | **106** | **37** | **20** | **57** | **228** | **153** | **381** | **342** | **197** | **539** | **840** | **660** | **1500** |

[1] Golf course is assumed to include 9-holes and a club house/pro shop.
[2] Light Industrial is assumed to include wine tasting and production.
[3] The trip generation estimates for Subareas G and E are included in Subareas B and D, respectively. These parks generate a combined estimated 23 trips during the weekday p.m. peak hour.

Table 6 shows the estimated trip distribution of the weekday p.m. peak hour trips generated by each subarea shown in Table 5 onto the major roadways in the study area. The percent distribution (Dist.) represents the proportion of overall trips from each subarea expected to use the specified roadway with and without the 5th Street extension.

***Table 6 – Estimated Trip Distribution by Subarea***

| Roadway | Subarea A | | Subarea B[1] | | Subarea C | | Subarea D[1] | | Subarea F | | Total ADT |
|---|---|---|---|---|---|---|---|---|---|---|---|
| | Dist. | Trips | Dist. | Trips | Dist. | Trips | Dist. | Trips | Dist. | Trips | |
| 5th Street via Edwards Road | 50% | 209 | 50% | 53 | 50% | 29 | 50% | 191 | 0% | 0 | 482 |
| 10th Street via Edwards Road | 25% | 104 | 0% | 0 | 25% | 14 | 0% | 0 | 0% | 0 | 118 |
| Parks Drive via Fulquartz Landing | 25% | 104 | 50% | 53 | 25% | 14 | 50% | 190 | 100% | 539 | 900 |
| ***Total*** | ***100%*** | ***417*** | ***100%*** | ***106*** | ***100%*** | ***57*** | ***100%*** | ***381*** | ***100%*** | ***539*** | ***1500*** |

[1] The estimated trip distribution pattern for Subareas G and E were assumed to be consistent with Subareas B and D, respectively.

In addition to the trips shown in Table 6, approximately 25 percent of the trips from subareas A and C and 100 percent of the trips from subareas C and D are expected to use 8th Street to access Edwards Road. The remaining trips from subareas A and C are expected to access Edwards Road via the local street network.

# III. Future Actions

## Other Implementation and Phasing Issues and Actions

Additional implementation issues will need to be addressed by the city, property owners, and/or other local and state agencies and stakeholders to support development of the Riverside District. The following Action Chart highlights key actions, estimated time frame and lead and supporting parties. The Action Chart does not reflect City budget commitments but is intended to highlight the scope of some of the Action Items.

***Table 7 – Riverside District Action Chart***

| Action # | Action Item Descriptions | Time Frame | Lead/Support |
|---|---|---|---|
| **WATER SUPPLY AND WATER MASTER PLAN** | | | |
| 1 | Obtain memo from Murray Smith & Associates regarding existing water supply capacity. | Include in hearing record prior to adoption of Master Plan – COMPLETE | City |
| 2 | Coordinate with City Attorney to define Riverside District Zone strategy relating to adequate public facilities (particularly water supply). | Define initial strategy prior to public hearing(s) for adoption of Plan – COMPLETE | City/City Attorney |
| 3 | Pursue interim measures to expand water supply to allow limited development. | 1-2 years | City |
| 4 | Establish schedule, budget and scope to update Water System Master Plan. | 1-2 years | City |
| 5 | Based on updated Water Master Plan, proceed with more detailed planning/design of water supply improvements (could include using water right to the Willamette River and construction of water treatment plant). | 2-5 years | City |
| **REFINE AND ADOPT NEW RIVERSIDE DISTRICT ZONE** | | | |
| 5 | Complete additional work to refine 3rd Draft of Riverside District Zone and address PC/CC issues (particularly related to scale of commercial/light industrial uses and design standards). | 6 months/1 year | City/Property Owners |
| 6 | Proceed with quasi-judicial or legislative zone changes when new Riverside District Zone is in place and adequate public facilities assured. | 1-3 years | Property Owners/City |
| **RIVERSIDE DISTRICT AREA SYSTEMS DEVELOPMENT CHARGE (SDC)** | | | |
| 7 | Consider special study to evaluate an area-wide SDC for the Riverside District to assure equitable funding of required infrastructure (including water, wastewater, transportation and neighborhood parks and trails). | 1-5 years | City/Property Owners/Consultant |

| Action # | Action Item Descriptions | Time Frame | Lead/Support |
|---|---|---|---|
| **BYPASS** | | | |
| 8 | Refine design of bridges over the Bypass in the Riverside District (cross-section, grade, etc.). | On-going | ODOT/City/Property Owners |
| 9 | Coordinate with ODOT on landscaping of berms adjacent to the Bypass (including maintenance). | 1-3 years | ODOT/City/Property Owners |
| 10 | Acquire right-of-way for Bypass and related improvements. | 1-5 years | ODOT/Property Owners |
| 11 | Construct Phase 1 of Bypass through Dundee. | 3-7 years | ODOT |
| **5th STREET EXTENSION** | | | |
| 12 | Meet with DLCD Field Representative and Yamhill County planning staff to discuss options for a goal exception or minor UGB amendment to accommodate 5th Street Extension. | Within next year | City/County/DLCD |
| 13 | Meet with Columbia Empire Farms to explore willingness to allow or support the 5th Street Extension. If there is no support, refine alternative for primary access into the Riverside District within the existing UGB. | 1-2 years | Affected Property Owners/City |
| 14 | If there is support, prepare land use application for a statewide goal exception or minor UGB amendment. If feasible, combine a UGB amendment to expand the UGB to the city limits boundary and also to accommodate the 5th Street Extension. | 2-3 years | Property Owner |
| 15 | Include the 5th Street Extension (if approved)and the Riverside District Parkway and other Collectors in the update of the Dundee TSP. | 2-5 years | City/ODOT |
| **UGB EXPANSION (Without 5th Street Extension)** | | | |
| 16 | Prepare application and/or consider UGB expansion to match the existing city limits boundary. Because this area (Subarea G) is identified for public open space and recreational uses, it might be a relatively simple application. | Following adoption of Master Plan | Property Owner(s)/City |
| **PARKS & TRAILS** | | | |
| 17 | Coordinate meeting and possible IGA to discuss Riverside District park & trail issues (dedication, improvement, standards, maintenance, etc.) | 1-2 years | City/CPRD |
| 18 | Complete more detailed park and trial planning as neighborhood parks are dedicated and trail easements obtained. | 5-20 years | City/CPRD/Developers |
| 19 | Evaluate funding options and pursue Nature Park improvements on the WWTP property. | 1-10 years | City |
| 20 | Coordinate with other agencies and advocacy groups on park and trail development in the | On-going | City/CPRD/Oregon Parks/Park Advocacy |

| Action # | Action Item Descriptions | Time Frame | Lead/Support |
|---|---|---|---|
| | Riverside District. | | Groups |
| **STREET TREES & STREET SIGNS/LIGHTING** | | | |
| 21 | Form an ad hoc committee to evaluate and propose appropriate street trees to require in the Riverside District; amend the Riverside District Zone to specify certain species if needed. | 2-3 years | City/Property Owners |
| 22 | Based on *Framework Plan to Establish a Unique Visual Identity*, identify appropriate street lighting and street signs to tie in with past work and help establish a cohesive design character for the Riverside District. Amend the Riverside District Zone or Public Works Standards as needed. | 2-3 years | City/Property Owners |
| **SUSTAINABILITY** | | | |
| 23 | Partner with public agencies, non-profit organizations, and Dundee residents and business owners to develop a city-wide sustainability plan to:<br>• Require and/or promote water conservation and efficiency<br>• Remove barriers and explore incentives to promote "low impact development"<br>• Support green design standards for public and private development projects (through Development Code and/or Public Works Standards). | 1-10 years | Citizens/Non-Profits/Advocacy Groups/City |

# Appendices

To be provided with final version

**Appendix A – Comprehensive Plan Amendments – New Riverside District Chapter**

**Appendix B – Supporting Documents (Adopted by Reference)**
Appendix B1 – Project Goals, Objectives and Evaluation Criteria
Appendix B2 – Meeting Summaries
Appendix B3 – Public Involvement Summary
Appendix B4 – Dundee Identity Framework Plan
Appendix B5 – Background Conditions Report
Appendix B6 – Charrette Report
Appendix B7 – Land Use Alternatives Report
Appendix B8 – Transportation Analysis
Appendix B9 – Cost Estimates, Funding Strategies and Responsibilities

# Appendix A

Comprehensive Plan Amendments – New Riverside District Chapter

RIVERSIDE DISTRICT

GOAL: Adopt a new Riverside District comprehensive plan designation and master plan to provide a land use and transportation framework to guide long-term development of the Riverside District.

OBJECTIVES

1. Apply a new Riverside District comprehensive plan designation to the approximately 360 acre planning area within the city limits shown in Figure 1.

2. Adopt the Riverside District Master Plan (June 2011) by reference as a support document to the Dundee Comprehensive Plan.

3. Adopt comprehensive plan policies specific to the Riverside District.

4. Recognize that adoption of the comprehensive plan framework (text and map amendments) represents the first steps in a multi-step process required prior to development. Future actions will include, but not be limited to:

    - Preparation of more detailed infrastructure and financial plans to assure adequate public facilities and services to support the master plan;

    - Development Code text amendment to adopt new Riverside District Zone;

    - Zone Change(s) to apply the new Riverside District Zone;

    - Detailed master plans (by subarea) to establish local street network, identify specific park sites and trail connections, lay out blocks, refine mix of land uses and set range of densities, mix of housing types and lot sizes, establish phasing schedule, etc.

    - Subdivision(s) to divide land in accordance with detailed master plans; dedicate local streets, parks and trail and utility easements; install public and private improvements, etc.

    - Potential site design review for non-residential buildings, unless clear and objective design standards are adopted as part of the detailed master plan for a particular subarea.

EXISTING CONDITIONS

The Riverside District was annexed to the City of Dundee in 1969, prior to adoption of Senate Bill 100 and Oregon's statewide planning program. When the Dundee Comprehensive Plan was adopted in 1977, the majority of the Master Plan area was included in Dundee's Urban Growth Boundary (UGB). The city applied an Agriculture (A) holding zone to approximately 235 acres within the UGB and plan policies called for incremental rezoning of the agricultural land for residential use based on need.

Agricultural and undeveloped lands on the lower terrace near the Willamette River were not included in the 1977 UGB. The city applied an Exclusive Farm Use (EFU) zone to preserve approximately 125 acres within the city limits for farm uses.

The Riverside District is still largely undeveloped, with the exception of the wastewater treatment plant and a few single family dwellings. In 2008, Dundee City Council re-zoned about 54 acres in the northerly portion of the Riverside District from the Agriculture holding zone to a mix of residential (R-2 and R-3), commercial (CC) and light industrial (LI) zones. Conditions were attached to the zone change approval to limit certain uses, require submittal and approval of a master plan and assure adequate public facilities prior to development of the subject property. During the zone change process, the City Council expressed interest in using the master planning process to ensure integrated planning and development of the entire Riverside District instead of piecemeal rezoning.

Plans for the Newberg-Dundee Bypass also have significant implications for development in the Riverside District. After a lengthy federal environmental review process, Yamhill County and the cities of Newberg, Dundee and Dayton all approved the Bypass alignment and adopted comprehensive plan policies to support the Bypass. The Bypass alignment fragments the Riverside District. The Bypass will have full access control and ODOT will build two overcrossings in the vicinity of 8$^{th}$ Street and Fulquartz Landing Road/Parks Drive to provide connectivity across the Bypass and maintain access to the Willamette River.

The master plan document summarizes background information and existing conditions for the Riverside District planning area. A Background Conditions Report (August 2010) provides more detailed information on existing conditions.

FINDINGS OF FACT

The Riverside District encompasses the majority of the city's buildable land inventory. The City of Dundee initiated the master planning process in 2010 to provide a more detailed land use and transportation plan to guide coordinated development of this special area. The project was

funded by a grant from the Oregon Department of Transportation and Growth Management (TGM) Program.

The Riverside District features a number of unique assets and opportunities:

- A relatively small number of property owners and large parcels of undeveloped land, making master planning easier;
- A prime location along the Willamette River, with outstanding views of the river and surrounding areas in addition to access to water-based recreation;
- Natural resources that provide intrinsic natural values as well as amenities to future residents and visitors; and
- Community support for the master planning process.

The Riverside District master plan reflects substantial input from the public involvement process, including opportunities for on-going coordination with the major property owners. A key step in the planning process was a design charrette, held October 10-14, 2010, to identify land use and transportation plan alternatives for the Riverside District. A market study and a transportation analysis informed the selection of the preferred alternative.

A preliminary, planning-level analysis of public facilities and services needed to implement the preferred alternative was prepared and included in the Land Use Alternatives Report. However, that report was very clear that more analysis of costs and financing mechanisms and responsibilities will need to be conducted to implement the master plan.

On March 31, 2011, Murray, Smith & Associates, Inc. (MSA) presented a memorandum to the City Administrator to provide an estimate of the available capacity of the City of Dundee's existing water supply sources to serve additional development within the City's Urban Growth Boundary (UGB). The memorandum clearly documented the severity of the constraints on the existing water supply.

Following consideration of the water supply issue, the City decided to proceed with the first steps in the planning process (adoption of the Riverside District plan designation and this Comprehensive Plan chapter) and defer adoption of the Riverside District Zone and rezoning land in the Riverside District until adequate public facilities and services can be assured.

POLICIES

1. The policies in this Riverside District chapter shall replace and supersede any policies in the Dundee Comprehensive Plan that relate to the area within the new Riverside District plan designation.

2. The City will identify the boundaries of the Riverside District plan designation on the Comprehensive Plan Map as shown in Figure 1.

3. The City will retain existing zoning that applies within the Riverside District plan designation. Existing zoning shall be considered consistent with the Riverside District plan designation because existing zones allow less intensive, lower density development than anticipated in the Riverside District Master Plan. Uses and development allowed under existing zoning regulations will be allowed, consistent with the provisions of the Dundee Development Code, statewide administrative rules and statutes, all of these policies, and any conditions of prior zoning and development approvals.

4. The waterfront uses are integral to and needed to support the overall development and open space vision of the Master Plan. The City will support the concept of expanding the UGB to coincide with the existing city limits and provide more appropriate zoning to accommodate the urban park, open space and recreational uses identified in the Riverside District Master Plan.

5. The City will adopt the Riverside District Master Plan (June 2011) by reference as a supporting document to the Dundee Comprehensive Plan. The Master Plan is intended to identify a coordinated mix of residential, commercial, tourism and open space and recreational uses that are cohesive and connected with Dundee's larger community vision. The Master Plan includes additional policies that will be applicable to review and approval of future zone changes, detailed master plans and subdivisions within the Riverside District.

6. Because the Master Plan is considered a concept document, the City will consider refinements to the location and arrangement of land uses and other aspects of the Master Plan prior to or in coordination with implementation of Riverside District zoning. Any changes to the concept Master Plan must include the following limitations and components:

    - A maximum of 22 acres designated for Commercial uses.

    - A maximum of 13 acres designated for Light Industrial uses.

- A mix of housing types and densities, with a target of 970 units in the Riverside District.
- In areas where the Riverside District is adjacent to developed, lower density residential areas, the development standards of the lower density zone (maximum heights and setbacks) shall apply to new housing on abutting lots in the Riverside District.
- Neighborhood park sites shall be required based on the target of 970 dwelling units according to the standards of the Dundee Parks and Open Space Plan.
- A connected trail system shall be required to accommodate the Willamette River Trail, the Chehalem Heritage Trail, and connecting local trails within the Riverside District that link to the larger community trail system.
- Cross-sections for trail improvements shall accommodate linear stormwater quality facilities, particularly along the top of the bluff.
- A connected local street system with cross-sections specified to encourage sidewalks, planter strips, and street trees. Blocks shall not exceed a maximum length of 400 feet in commercial areas or 600 feet in residential areas.
- A parkway collector shall be required to provide a north-south link of development subareas to the east of the Bypass and connections to the two Bypass overcrossings. The cross-section for the parkway collector shall be consistent with the standards in the Dundee TSP.
- Riparian corridors shall be protected with a minimum 50-foot setback from the top of bank elevation.

7. Planning for water use should incorporate techniques and systems (e.g. “purple pipe”) for water reuse and conservation to the greatest degree practical, including potential reuse of wastewater for irrigation or other purposes.

8. All development within the Riverside District shall be adequately supported by the required facilities and services, including parks, schools, transportation, water, stormwater and wastewater infrastructure. Implementing ordinances shall provide that:

    - Required facilities and services must be available concurrent with development; and

- No implementing zoning map amendment may be granted except upon a finding that all required facilities and services are available, or can be made available, concurrent with development.

IMPLEMENTATION

The Riverside District Master Plan includes an Action Chart that identifies implementation action issues that will need to be addressed by the city, property owners, and/or other local and state agencies and stakeholder to support development of the Riverside District. The Action Chart does not reflect City budget commitments but is intended to highlight the scope of some of the action items.

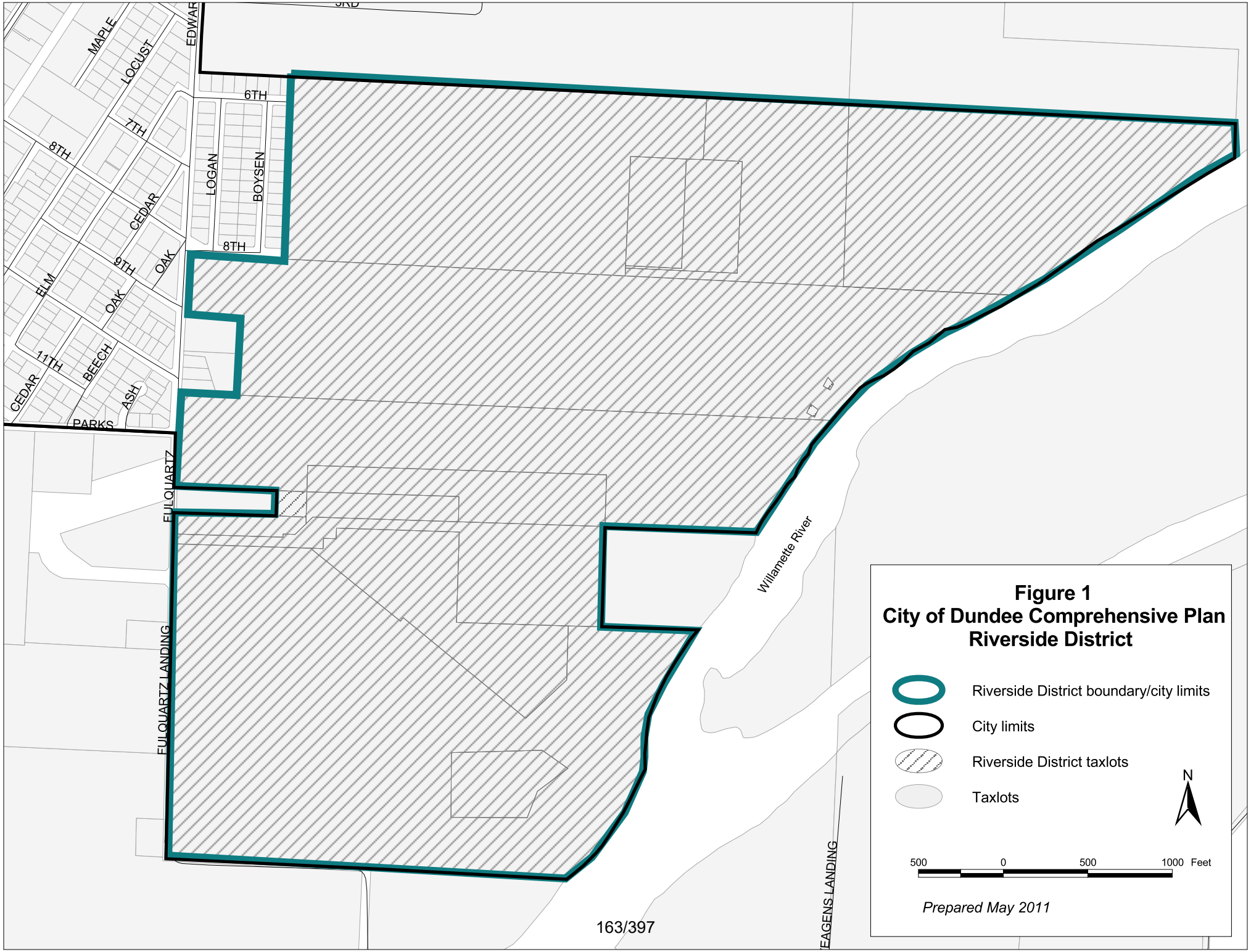


**Figure 1**
**City of Dundee Comprehensive Plan**
**Riverside District**

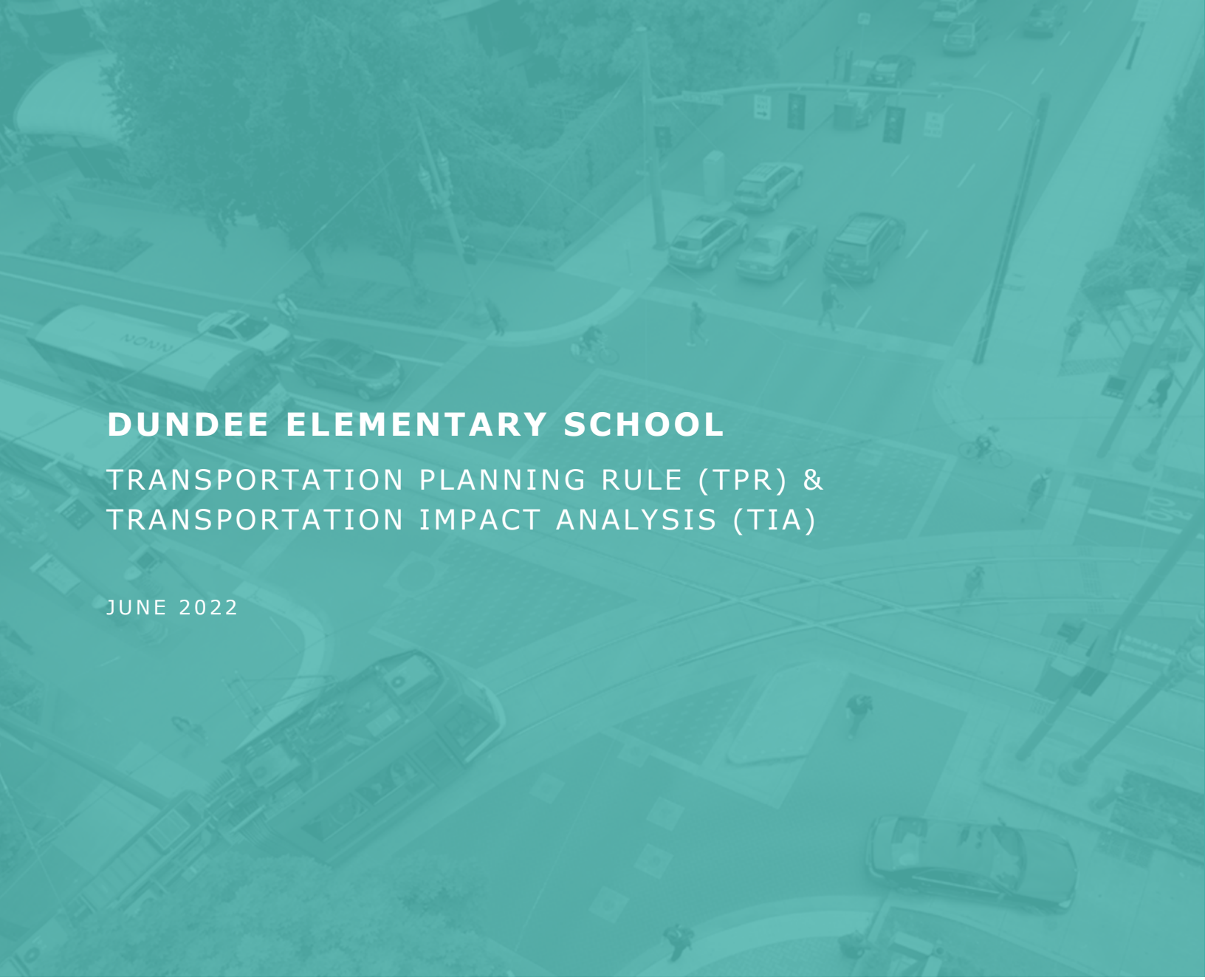

# DUNDEE ELEMENTARY SCHOOL

## TRANSPORTATION PLANNING RULE (TPR) & TRANSPORTATION IMPACT ANALYSIS (TIA)

JUNE 2022

PREPARED FOR:

**NEWBERG SCHOOL DISTRICT**

NEWBERG PUBLIC SCHOOLS

DKS

117 COMMERCIAL STREET NE, SUITE 310, SALEM, OR 97301 • 503.391.8773 • DKSASSOCIATES.COM

SHAPING A SMARTER TRANSPORTATION EXPERIENCE™

AN EMPLOYEE-OWNED COMPANY

## PREPARED FOR NEWBERG SCHOOL DISTRICT

Nikki Fowler

## PREPARED BY DKS ASSOCIATES

Lacy Brown, Ph.D., P.E., Project Manager

Jenna Bogert, P.E., Transportation Engineer

Travis Larson, E.I., Transportation Engineer

# TABLE OF CONTENTS

**INTRODUCTION** ..... **4**

**TRANSPORTATION PLANNING RULE (TPR)** ..... **5**

TRIP GENERATION ..... 5
TRANSPORTATION PLANNING RULE REVIEW ..... 6

**TRANSPORTATION IMPACT ANALYSIS (TIA)** ..... **7**

EXISTING CONDITIONS ..... 7
Study Area Roadway Network ..... 9
Pedestrian and Bicycle Facilities ..... 9
Public Transit ..... 9
Existing Traffic Volumes ..... 9
Intersection Performance Measures ..... 13
Required Operating Standards ..... 14
Existing Operating Conditions ..... 14
Safety Analysis ..... 15
Planned Projects ..... 16
FUTURE CONDITONS ..... 17
Trip Generation ..... 17
Trip Distribution ..... 17
Analysis Scenarios ..... 18
Future Traffic Volumes ..... 19
Future Intersection Operations ..... 20
Safe Routes to School ..... 22
SITE PLAN EVALUATION ..... 23
Project Site Frontage ..... 23
Access Spacing ..... 24
Sight Distance at Access Points ..... 24
On-Site Circulation ..... 24
Parking ..... 25
PROJECT SUMMARY ..... 26

## INTRODUCTION

This study evaluates the transportation impacts associated with the proposed relocation of Dundee Elementary School in Dundee, Oregon. The Newberg School District desires to relocate the existing Dundee Elementary School from its current location on 5th Street to the other side of OR 99W on 8th Street. The existing school currently has an enrollment of 220 students and the new proposed building will have a capacity of 350 students.

The purpose of this memorandum is to provide an evaluation of the Transportation Planning Rule (TPR) and a transportation impact analysis (TIA).

**Transportation Planning Rule (TPR):** The School District desires to rezone the subject parcel (Tax Lot R333600100) to allow for the development of a new Dundee Elementary School. The property is currently located in the Riverside District and is currently zoned as Riverside Residential (RR). The School District proposes to rezone the parcel to Public (P) zoning. The proposed zone change must be in accordance with Oregon Administrative Rule (OAR) 660-012-0060, the Transportation Planning Rule (TPR). The intent of the TPR (OAR 660-12-0060) is to ensure that future land use and traffic growth is consistent with transportation system planning and does not create a significant effect on the surrounding transportation system beyond currently allowed uses. The definition of a significant effect varies by jurisdiction and no such definition is provided in the City of Dundee code. According to the Oregon Highway Plan (OHP), a net increase of 400 daily trips qualifies as a significant effect. While the OHP is not applicable to city streets, it provides a reasonable estimate of a significant effect for TPR analysis purposes.

**Traffic Impact Study (TIS):** Transportation impacts are assessed based on the proposed development (350-student elementary school) and proposed site plan and requires the evaluation of the transportation system under the Existing conditions and Year of Opening conditions (2024).

## TRANSPORTATION PLANNING RULE (TPR)

This section reviews the impacts that the proposed zone change would have on the City of Dundee's transportation within the study area. This section contains information on the anticipated trip generation for the worst-case scenario under both the current zoning and proposed zoning. The subject parcel is approximately 15.5 acres in size and is located in the Riverside District and is currently zoned as Riverside Residential (RR). The School District proposes to rezone the parcel to Public (P) zoning.

### TRIP GENERATION

Trip generation is the method used to estimate the number of vehicles a development adds to site driveways and the adjacent roadway network during a specified period (e.g., the PM peak hour). Trip generation estimates are performed using trip rates surveyed at similar land uses, as provided by the Institute of Transportation Engineers (ITE).[1]

The subject parcel is located within the Dundee Riverside District and is zoned as Riverside Residential. Based on the Riverside District Master Plan, which was adopted in August 2019, the desired land use for the subject parcel includes 24 single-family homes and 40 multi-family units.[2] Because the desired land use for the subject parcel was identified in the adopted Riverside Master Plan, this was assumed to be the reasonable worst-case trip generation based on the current zoning (RR).

Based on the list of permitted uses under Public zoning in Dundee, the reasonable worst-case land use for the subject parcel would be an elementary school. Table 1 shows the AM peak hour, PM peak hour, and weekday trip generation for the reasonable worst-case scenarios for both the current and proposed zoning.

[1] *Trip Generation Manual, 10th Edition,* Institute of Transportation Engineers, 2017.

[2] Table 3, Dundee Riverside District Master Plan, Angelo Planning Group, June 2011.

**TABLE 1: TRIP GENERATION (TPR ANALYSIS)**

| LAND USE (ITE CODE) | SIZE | AM PEAK HOUR | | | PM PEAK HOUR | | | WEEKDAY TOTAL |
|---|---|---|---|---|---|---|---|---|
| | | IN | OUT | TOTAL | IN | OUT | TOTAL | |
| **CURRENT ZONING (RR)** | | | | | | | | |
| SINGLE FAMILY (210) | 24 units | 5 | 17 | 22 | 16 | 10 | 26 | 280 |
| MULTIFAMILY (220) | 40 units | 5 | 15 | 20 | 16 | 10 | 26 | 262 |
| | *Total* | *10* | *32* | *42* | *32* | *20* | *52* | *541* |
| **PROPOSED ZONING (P)** | | | | | | | | |
| ELEMENTARY SCHOOL (520) | 350 Students | 127 | 108 | 235 | 29 | 31 | 60 | 561 |
| **NET DIFFERENCE (PROPOSED – CURRENT)** | | **+117** | **+140** | **+193** | **-3** | **+11** | **+8** | **+19** |

As shown, the buildout of the subject property under the proposed P zoning would increase the potential trip generation of the property by 193 AM peak hour trips, 8 PM peak hour trips, and 19 weekday trips compared to the current RR zoning.

## TRANSPORTATION PLANNING RULE REVIEW

After evaluating the reasonable worst-case development potential of both the existing (RR) and proposed (P) zoning, the proposed zone change will result in a maximum net increase of 19 trips per day.

The definition of a significant effect varies by jurisdiction and no such definition is provided in the City of Dundee code. According to the Oregon Highway Plan (OHP)[3], a net increase of 400 daily trips qualifies as a significant effect. While the OHP is not applicable to local roadways, it provides a reasonable estimate of a significant effect for TPR analysis purposes.

The expected worst-case net increase in daily trips is less than 400, which is a reasonable estimate of the threshold for a "significant effect". As such, the proposed zone change is not expected to have a significant effect on the surrounding transportation system and the Transportation Planning Rule requirements satisfied.

[3] Action 1F.5, Oregon Highway Plan, Oregon Department of Transportation, Amended May 2015.

## TRANSPORTATION IMPACT ANALYSIS (TIA)

This section reviews the estimated impacts that the proposed new elementary school may have on the transportation system within the study area. This analysis includes an evaluation of existing conditions, trip generation estimates, trip distribution assumptions, and future year traffic volumes and operating conditions for the study intersections. The TIA also includes a site plan evaluation.

### EXISTING CONDITIONS

The traffic impact analysis is focused on five study intersections which are listed below:

- OR 99W/ 5th Street
- OR 99W/ 10th Street
- OR 99W/ Parks Drive/ Niederberger Road
- Edwards Drive/ 5th Street
- Edwards Drive/ 8th Street

Table 2 lists important characteristics of the study area and proposed project. Figure 1 shows the study intersections and location of the project site.

**TABLE 2: KEY STUDY AREA AND PROPOSED DEVELOPMENT CHARACTERISTICS**

| CHARACTERISTICS | INFORMATION |
|---|---|
| **STUDY AREA** | |
| NUMBER OF STUDY INTERSECTIONS | Five |
| ANALYSIS PERIOD | Weekday AM Peak and Afternoon Peak Hours (One hour between 7-9 AM and 2-4 PM) |
| **PROJECT SITE** | |
| EXISTING LAND USE | Vacant |
| PROPOSED DEVELOPMENT | 350-student Elementary School |
| PROPOSED PROJECT ACCESS(ES) | Driveways on 8th Street east of Edwards Drive |

**FIGURE 1: STUDY AREA**

## STUDY AREA ROADWAY NETWORK

Key roadways in the study area are summarized in Table 3 along with their existing roadway characteristics.

**TABLE 3: STUDY AREA ROADWAY CHARACTERISTICS (WITHIN THE VICINITY OF THE PROJECT)**

| ROADWAY | FUNCTIONAL CLASSIFICATION | NO. OF LANES | POSTED SPEED | SIDEWALKS | BICYCLE FACILITIES | ON-STREET PARKING |
|---|---|---|---|---|---|---|
| OR 99W | Principal Arterial (ODOT) | 3 | 30 mph | Yes | Yes | No |
| 5TH STREET | Parkway Collector | 2 | 25 mph | Yes | No | Yes |
| 10TH STREET | Local | 2 | 25 mph | No | No | Yes |
| PARKS DRIVE/ NIEDERBERGER ROAD | Collector | 2 | 25 mph | No | No | No |
| EDWARDS DRIVE | Parkway Collector/ Collector [a] | 2 | 25 mph | Partial | No | Yes |
| 8TH STREET | Parkway Collector/ Local [b] | 2 | 25 mph | Partial | No | Yes |

[a] The functional classification is Parkway Collector north of 8th Street and Collector south of 8th Street.
[b] The functional classification is Parkway Collector east of Edwards Street and Local west of Edwards Street.

## PEDESTRIAN AND BICYCLE FACILITIES

Near the project site, there are no dedicated bicycle facilities. Sidewalks exist on the north side of 8th Street for approximately 500 ft east of Edwards Drive. North of 8th Street, there are sidewalks on both sides of Edwards Drive. South of 8th Street, there are sidewalks on the west side of Edwards Drive. No sidewalks are present that abut the property line on 8th Street or Edwards Drive.

## PUBLIC TRANSIT

Yamhill County Transit operates several fixed routes that serve a majority of the county. Route 44 and 44X (McMinnville to Tigard) provide service between McMinnville and the Tigard Transit Center. There are bus stops on OR 99W at the intersections of 9th Street and 10th Street in Dundee. This route has headways of approximately one hour going northbound in the mornings and one hour going southbound in the afternoon/evenings. During off-peak hours, the headways are longer.

## EXISTING TRAFFIC VOLUMES

Existing AM peak hour (7-9 AM) and afternoon peak hour (2-4 PM) traffic volumes were collected at the five study intersections. The turning movement counts were collected on Thursday, June 15th, 2021, while school was still in session before the summer break.

It should be noted that no traffic counts were collected for the PM peak period (typically 4:00 – 6:00 PM). The proposed land use is an elementary school which has low traffic generation during the PM peak hour. Although 4 PM – 6 PM is typically the peak period during a weekday, an analysis of that time period would show very little change or impact to the street system from the Elementary School.

At the time of data collection, Dundee Elementary School was on a hybrid in-person/virtual learning schedule. During the morning, approximately half of the in-person students would attend school (morning cohort) from 8:45 AM – 10:45 AM. During the afternoon, the other half of students (afternoon cohort) would attend school in-person from 12:45 PM – 2:45 PM. On Fridays, all students attended school remotely. Typically, Newberg-Dundee elementary schools begin at 8:30 AM and end at 3:10 PM.[4]

The five study intersection are listed below.

- OR 99W/ 5th Street
- OR 99W/ 10th Street
- OR 99W/ Parks Drive/ Niederberger Road
- Edwards Drive/ 5th Street
- Edwards Drive/ 8th Street

**System Peak Hours**

The calculated peak hours at the five study intersections for the two analysis periods (AM and Afternoon) are shown in the table below. The selected peak hours for analysis are shown at the bottom of the table.

**TABLE 4: INDIVIDUAL PEAK HOURS AT STUDY INTERSECTIONS**

| ANALYSIS PERIOD (TWO HOURS) | AM (7:00 – 9:00 AM) | AFTERNOON (2:00 – 4:00 PM) |
|---|---|---|
| 1. OR 99W/5TH ST | 7:05 – 8:05 AM | 3:00 – 4:00 PM |
| 2. OR 99W/10TH ST | 7:05 – 8:05 AM | 3:00 – 4:00 PM |
| 3. OR 99W/PARKS DR/NIEDERBERGER RD | 7:05 – 8:05 AM | 2:55 – 3:55 PM |
| 4. EDWARDS DR/5TH ST | 7:25 – 8:25 AM | 2:05 – 3:05 PM |
| 5. EDWARDS DR/8TH ST | 7:55 – 8:55 AM | 2:20 – 3:20 PM |
| SELECTED SYSTEM PEAK HOUR | **7:40 – 8:40 AM** | **2:40 – 3:40 PM** |

The system peak hours were selected so as to capture the school start time (8:30 AM) and release time (3:10 PM) as well as much of the calculated peak hours as possible.

4

### COVID-19 Adjustment

Due to irregular traffic patterns caused by COVID-19 restrictions, the traffic counts were adjusted to reflect typical traffic conditions. Using 2019 and 2021 data from ATR 36-004 (near Highway 99W/Springbrook Road in Newberg, MP 21.81) and ATR 36-006 (approximately five miles southwest of McMinnville on Highway 18, MP 41.00), a COVID-19 adjustment factor was calculated by comparing the average hourly weekday volumes during the month of June (Tuesdays, Wednesdays, and Thursdays only). See the table below for details.

**TABLE 5: AVERAGE WEEKDAY VOLUMES (ATR 36-004 AND ATR 36-006)**

| ATR | YEAR | HOUR VEHICLE VOLUMES (8 AM – 9 AM) | HOUR VEHICLE VOLUMES (3 PM – 4 PM) |
|---|---|---|---|
| ATR 36-004 (NEWBERG) | 2019 | 2,322 | 2,819 |
| | 2021 | 2,106 | 2,789 |
| | RATIO (2021/2019) | 0.91 | 0.99 |
| ATR 36-006 (MCMINNVILLE) | 2019 | 777 | 1,170 |
| | 2021 | 721 | 1,232 |
| | RATIO (2021/2019) | 0.93 | 1.05 |
| | AVERAGE | 0.92 (-4% average yearly growth rate) | 1.02 (1% average yearly growth rate) |
| **COVID-19 ADJUSTMENT FACTOR** | | **1.12** | **1.00** |

Based on the ATR data, there was a decrease of about 4% per year from 2019 to 2021. In order to adjust the collected counts, the counts were grown by 4% for 2 years to account for COVID and then an average of 2% growth per year was added on to that number to account for typical regional and local growth in the area. This results in a COVID-19 adjustment factor of 1.12, which was applied to the AM peak hour volumes.

However, during the Afternoon peak hour, the average yearly growth between 2019 and 2021 was an estimated 1%, which is a typical growth rate. Therefore, no adjustment (factor of 1.0) was applied to the Afternoon peak hour volumes.

### Seasonal Adjustment Factor

ODOT's Analysis Procedures Manual (APM) calls for adjustment of raw traffic counts to 30th highest hour volumes (30 HV) to account for seasonal variation through the course of a year. Counts used in this analysis were collected in mid-June during the AM and Afternoon peak hours. Because the

traffic counts were not collected during the PM peak hour, the adjusted counts will not represent 30HV. Regardless, the ODOT seasonal adjustment process was still performed for both the AM and Afternoon peak hour volumes.

ATR 36-004 (near Highway 99W/Springbrook Road in Newberg, MP 21.81) and ATR 36-006 (approximately five miles southwest of McMinnville on Highway 18, MP 41.00) are located in neighboring cities to Dundee. Both ATRs are assumed to have similar seasonal fluctuations as Highway 99W through Dundee and were evaluated to determine the seasonal adjustment factor.

After evaluating the ATR data, the peak month at both of these locations was either July or August. However, school is not in session during these months and therefore, DKS only calculated the seasonal adjustment factor during the school year (September through June) since the proposed development is an elementary school.

Based on ATR data shown in the table below, the peak month during the school year (September through June) is June, the same month that the traffic counts were collected. Therefore, DKS did not apply a seasonal adjustment (i.e., factor of 1.00) to the collected traffic counts.

**TABLE 6: SEASONAL ADJUSTMENT FACTOR**

| ATR | PERCENT OF AADT | | | | | | SEASONAL ADJUSTMENT FACTOR |
|---|---|---|---|---|---|---|---|
| | MONTH | 2019 | 2018 | 2017 | 2016 | 2015 | |
| ATR 36-004 (NEWBERG) | Peak (June) | 107 | 107 | 105 | 107 | 105 | 106.3 / 106.3 = 1.00 |
| | Traffic Counts (June) | 107 | 107 | 105 | 107 | 105 | |
| ATR 36-006 (MCMINNVILLE) | Peak (Sept/June) | 105 | 102 | 103 (Sept) | 103 | 101 | 102.7 / 102.3 = 1.00 |
| | Traffic Counts (June) | 105 | 102 | 102 | 103 | 101 | |
| AVERAGE SEASONAL ADJUSTMENT FACTOR | | | | | | | 1.00 |

The adjusted 2021 existing traffic volumes for the AM and Afternoon peak hours are shown in Figure 2.

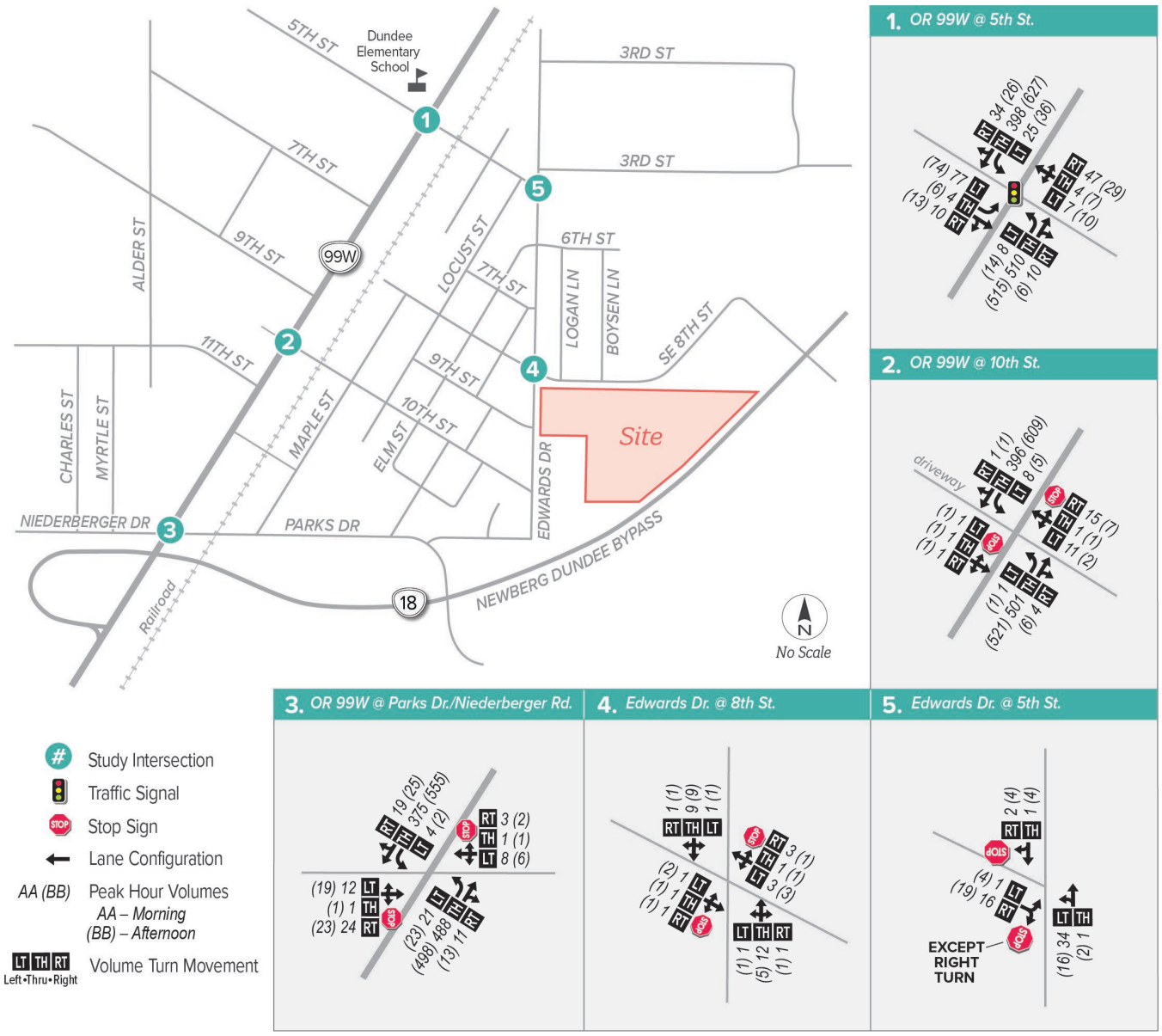


**FIGURE 2: EXISTING 2021 AM AND AFTERNOON PEAK HOUR VOLUMES**

## INTERSECTION PERFORMANCE MEASURES

Level of service (LOS) ratings and volume-to-capacity (v/c) ratios are two commonly used performance measures that provide a good picture of intersection operations.

- **Level of Service (LOS):** A "report card" rating (A through F) based on the average delay experienced by vehicles at the intersection. LOS A, B, and C indicate conditions where traffic moves without significant delays over periods of peak hour travel demand. LOS D and E are progressively worse operating conditions. LOS F represents conditions where average vehicle delay has become excessive and demand has exceeded capacity.

- **Volume-to-capacity (v/c) ratio:** A decimal representation (typically between 0.00 and 1.00) of the proportion of capacity that is being used at a turn movement, approach leg, or intersection. It is determined by dividing the peak hour traffic volume by the hourly capacity of a given intersection or movement. A lower ratio indicates smooth operations and minimal delays. As the ratio approaches 1.00, congestion increases, and performance is reduced. If the ratio is greater than 1.00, the turn movement, approach leg, or intersection is oversaturated and usually results in excessive queues and long delays.

## REQUIRED OPERATING STANDARDS

Three of the five study intersections are located on Oregon Department of Transportation (ODOT) facilities. Therefore, they are required to meet ODOT's mobility target as prescribed in the 1999 Oregon Highway Plan (OHP). OR 99W is classified as a freight route on a Statewide Highway with a posted speed of 30 mph, therefore the target volume-to capacity (v/c) ratio is 0.85.[5]

Two of the five study intersections are under City of Dundee jurisdiction and therefore must meet the City's Level of Service standards of LOS D or better.[6]

## EXISTING OPERATING CONDITIONS

Existing traffic operations at the study intersections were determined for the AM and Afternoon peak hours based on the Highway Capacity Manual (HCM) 6th Edition methodology for signalized and unsignalized intersections.[7] The results were then compared with the City of Dundee's minimum acceptable LOS operating standard and ODOT's mobility targets. Table 7 lists the estimated v/c ratio, delay, and LOS of each study intersection.

**TABLE 7: EXISTING INTERSECTION OPERATIONS (2021)**

| STUDY INTERSECTION | OPERATING STANDARD / MOBILITY TARGET | AM PEAK HOUR | | | AFTERNOON HOUR | | |
|---|---|---|---|---|---|---|---|
| | | V/C RATIO | DELAY (SECS) | LOS | V/C RATIO | DELAY (SECS) | LOS |
| **SIGNALIZED** | | | | | | | |
| **OR 99W/ 5TH ST** | v/c ≤ 0.85 | 0.56 | 10.5 | B | 0.60 | 10.2 | B |
| **TWO-WAY STOP CONTROLLED** | | | | | | | |
| **OR 99W/ 10TH ST** | v/c ≤ 0.85 | 0.11 | 18.6 | A/C | 0.04 | 18.3 | A/C |

[5] Oregon Highway Plan, Table 6, Oregon Department of Transportation, Amended 2015.

[6] Dundee Transportation System Plan, City of Dundee, 2015.

[7] Highway Capacity Manual, 6th Edition, Transportation Research Board, 2016.

| STUDY INTERSECTION | OPERATING STANDARD / MOBILITY TARGET | AM PEAK HOUR | | | AFTERNOON HOUR | | |
|---|---|---|---|---|---|---|---|
| | | V/C RATIO | DELAY (SECS) | LOS | V/C RATIO | DELAY (SECS) | LOS |
| OR 99W/ PARKS DR/ NIEDERBERGER RD | v/c ≤ 0.85 | 0.15 | 19.4 | A/C | 0.24 | 28.6 | A/D |
| EDWARDS DR/ 8TH ST | LOS D | 0.01 | 9.0 | A/A | 0.01 | 9.3 | A/A |
| EDWARDS DR/ 5TH ST | LOS D | 0.01 | 8.6 | A/A | 0.01 | 8.7 | A/A |

**SIGNALIZED INTERSECTION:**
Delay = Average Intersection Delay (sec.)
v/c = Volume-to-Capacity Ratio
LOS = Level of Service

**TWO-WAY STOP CONTROLLED INTERSECTION:**
Delay = Critical Movement Approach Delay (sec.)
v/c = Critical Movement Volume-to-Capacity Ratio
LOS = Level of Service (Major/Minor Road)

As shown above, of the study intersections meet the City's operating standard and ODOT mobility targets.

## SAFETY ANALYSIS

A brief discussion of the crash analysis that was performed for the study area is presented in the sections below. Crash data was obtained from the ODOT Crash Analysis and Reporting Unit for the five most recent years of published data (2015-2019).

### Crash Statistics

Between the beginning of 2015 and end of 2019, 46 crashes were recorded across the five study intersections. There were 39 rear-end crashes (85%), 3 turning movement crashes (7%), 2 Angle crashes (4%), 1 backing crash (2%), and 1 pedestrian crash (2%). The number of crashes at each study intersection is recorded in Table 8.

There were no fatal or serious injury crashes reported in this timeframe for all the intersections. The crashes consisted of 3 minor injury crashes (7%), 23 possible injury crashes (50%), and 20 property damage only (PDO) crashes (43%).

There was one pedestrian crash and no bicycle crashes recorded at the study intersections. The pedestrian crash occurred at the intersection of OR 99W and 10th Street in 2015. A vehicle traveling southbound on OR 99W failed to yield and hit a pedestrian crossing OR 99W in a marked crosswalk. The crash happened on a dry and cloudy day and resulted in minor injuries.

### Critical Crash Rate Calculations

ODOT Analysis Procedure Manual (APM) guidance was followed to evaluate the crash rate at the study intersections. Table 8 shows the results of the evaluation. The intersection types were determined by their respective geometries and traffic control. As there were only a few

intersections per Intersection Type, Exhibit 4-1 in the Analysis Procedures Manual[8] was utilized to determine the critical crash rates.

**TABLE 8: CRITICAL CRASH RATE RESULTS**

| INTERSECTION | GROUPING TYPE [a] | NUMBER OF CRASHES | CRITICAL RATE (90TH PERCENTILE) | CALCULATED CRASH RATE |
|---|---|---|---|---|
| OR 99W & 5TH ST | URBAN 4SG | 24 | 0.860 | 0.580 |
| OR 99W & 10TH ST | URBAN 4ST | 8 | 0.408 | 0.233 |
| OR 99W & PARKS DR/ NIEDERBERGER RD | URBAN 4ST | 14 | 0.408 | 0.397 |
| EDWARDS DR & 5TH ST | URBAN 3ST | 0 | 0.293 | 0.000 |
| EDWARDS DR & 8TH ST | URBAN 4ST | 0 | 0.408 | 0.000 |

[a] 4ST = Four-Leg Minor Stop-Control, 4SG = Four-Leg Signalized, 3ST = Three-Leg Minor Stop-Controlled, 3SG = Three-Leg Signalized
**Bold/Highlighted** = Calculated Rate exceeds Critical Rate

### SPIS Rankings

The Safety Priority Index System (SPIS) is the ranking system developed by ODOT to identify potential safety problems on state highways. SPIS scores are developed based upon crash frequency, severity, and rate for a 0.10 mile or variable length segment along the state highway over a rolling three-year window. A prioritized list of the top 15% of statewide SPIS sites is created for each region, and the top 5% are investigated further.

Based on SPIS 2019 (crashes from 2016-2018), there are no designated SPIS sites within the study area.

## PLANNED PROJECTS

The Dundee Transportation System Plan (TSP) contains a project list of transportation improvements that are categorized into the following groups: Likely Funded, Possibly Funded, and Aspirational. The list below shows the Dundee TSP improvement projects near the project site.[9]

### Likely Funded

- None

### Possibly Funded

[8] Analysis Procedures Manual, Oregon Department of Transportation, Updated 10/22/2020.

[9] Tables 5 and 6, Dundee Transportation System Plan, Volume 1, July 2015.

- B12 – 8th Street Bike Lanes (from Edwards Drive to eastern UGB limit)
- W10 – Sidewalk infill on Edwards (from 8th Street to Parks Drive)
- B18 – Edwards Drive Bike Lanes/Shared Roadway (from 5th Street to Parks Drive)

**Aspirational**

- D14 – Edwards Collector Upgrades (from 8th Street to Parks Drive)

## FUTURE CONDITONS

The proposed development is an elementary school with the capacity for 350 students. Three site access points are proposed on 8th Street.

### TRIP GENERATION

Trip generation is the method used to estimate the number of vehicles added to site roadways and the adjacent roadway network by a development during a specified period. For this study, ITE 10th Edition trip generation data was used to determine the trip generation of the elementary school.[10]

Table 9 provides the trip generation for the proposed development. As shown, the development is expected to generate a total of 235 (127 in, 108 out) AM peak hour trips and 119 (54 in, 65 out) Afternoon peak hour trips.

**TABLE 9: SITE TRIP GENERATION**

| LAND USE (ITE CODE) | SIZE | AM PEAK HOUR | | | AFTERNOON PEAK HOUR | | | WEEKDAY TOTAL |
|---|---|---|---|---|---|---|---|---|
| | | TOTAL | IN | OUT | TOTAL | IN | OUT | |
| **ELEMENTARY SCHOOL (520)** | 350 Students | 235 | 127 | 108 | 119 | 54 | 65 | 561 |

### TRIP DISTRIBUTION

Trip distribution provides an estimate of where project-related trips are expected to be coming from and going to. It is given as percentages at key gateways to the study area and is used to route project trips through the study intersections.

Figure 3 shows the expected vehicle trip distribution and routing for the new vehicle trips generated by the proposed development. The distribution shows 25% of trips traveling to/from the north of 5th Street along OR 99W, 55% of trips traveling to/from the west side of OR 99W, 5% traveling to/from the south of Dundee, and 15% of trips traveling to/from the neighborhoods on

[10] Trip Generation Manual, 10th Edition, Institute of Transportation Engineers, 2017.

the east side of OR 99W. These trip distribution percentages were estimated based on elementary

student enrollment data provided by the School District.

**FIGURE 3: PROJECT TRIPS AND TRIP DISTRIBUTION**

## ANALYSIS SCENARIOS

Future operating conditions were analyzed at the study intersections for the following future traffic scenarios. The comparison of the following scenarios enables the assessment of project impacts:

- 2024 No Build (background traffic only)
- 2024 Build (background traffic + project trips)

The 2024 No Build scenario represents the traffic conditions of the study area without the project trips for the proposed development. The 2024 Build scenario represents traffic conditions of the study area with the project trips for the proposed development, assuming it is built and fully occupied by 2024.

## FUTURE TRAFFIC VOLUMES

The traffic volumes for the No Build and Build future analysis scenarios are shown in Figure 4 and Figure 5, respectively.

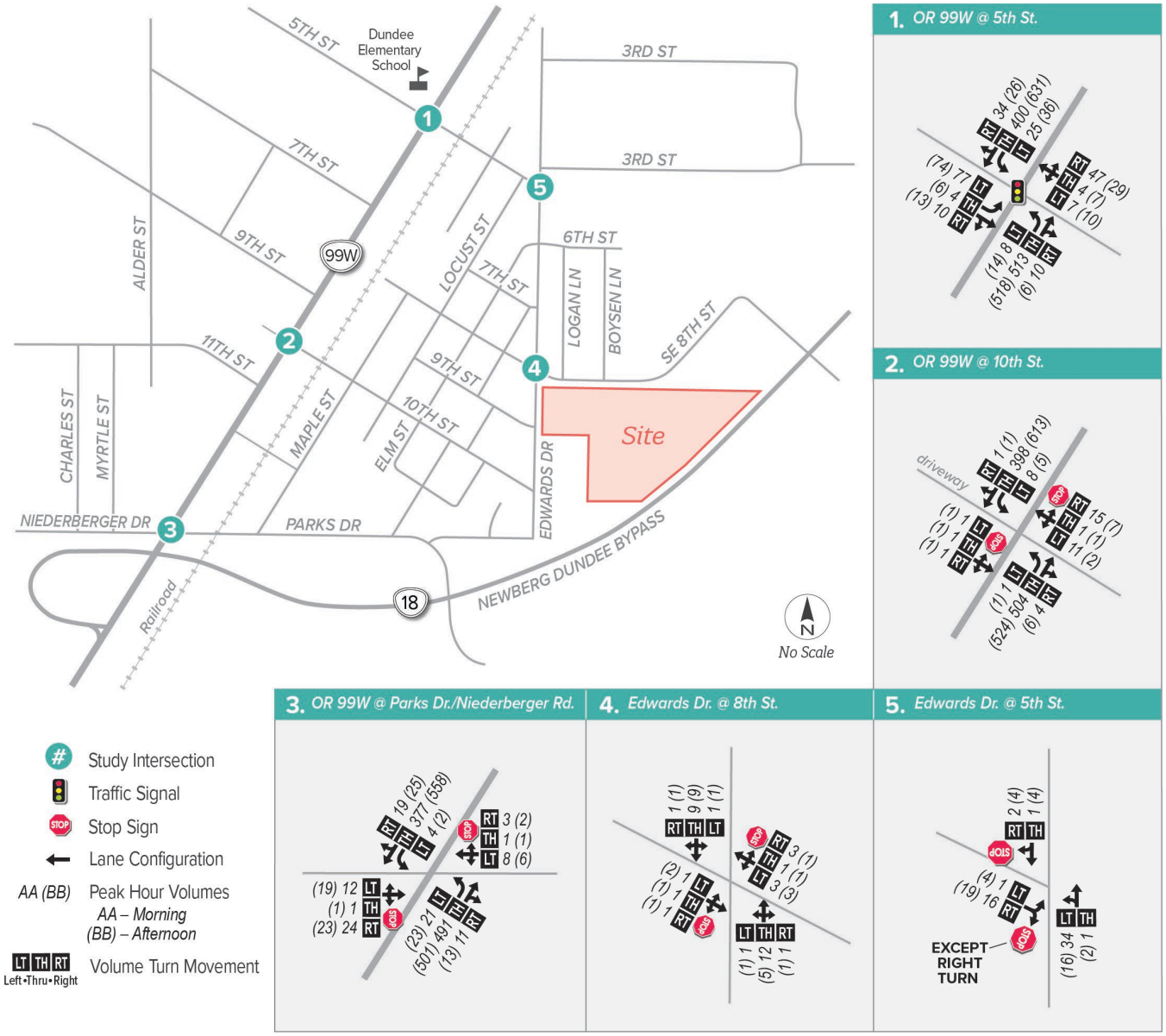


**FIGURE 4: NO BUILD AM AND AFTERNOON PEAK HOUR VOLUMES (2024)**

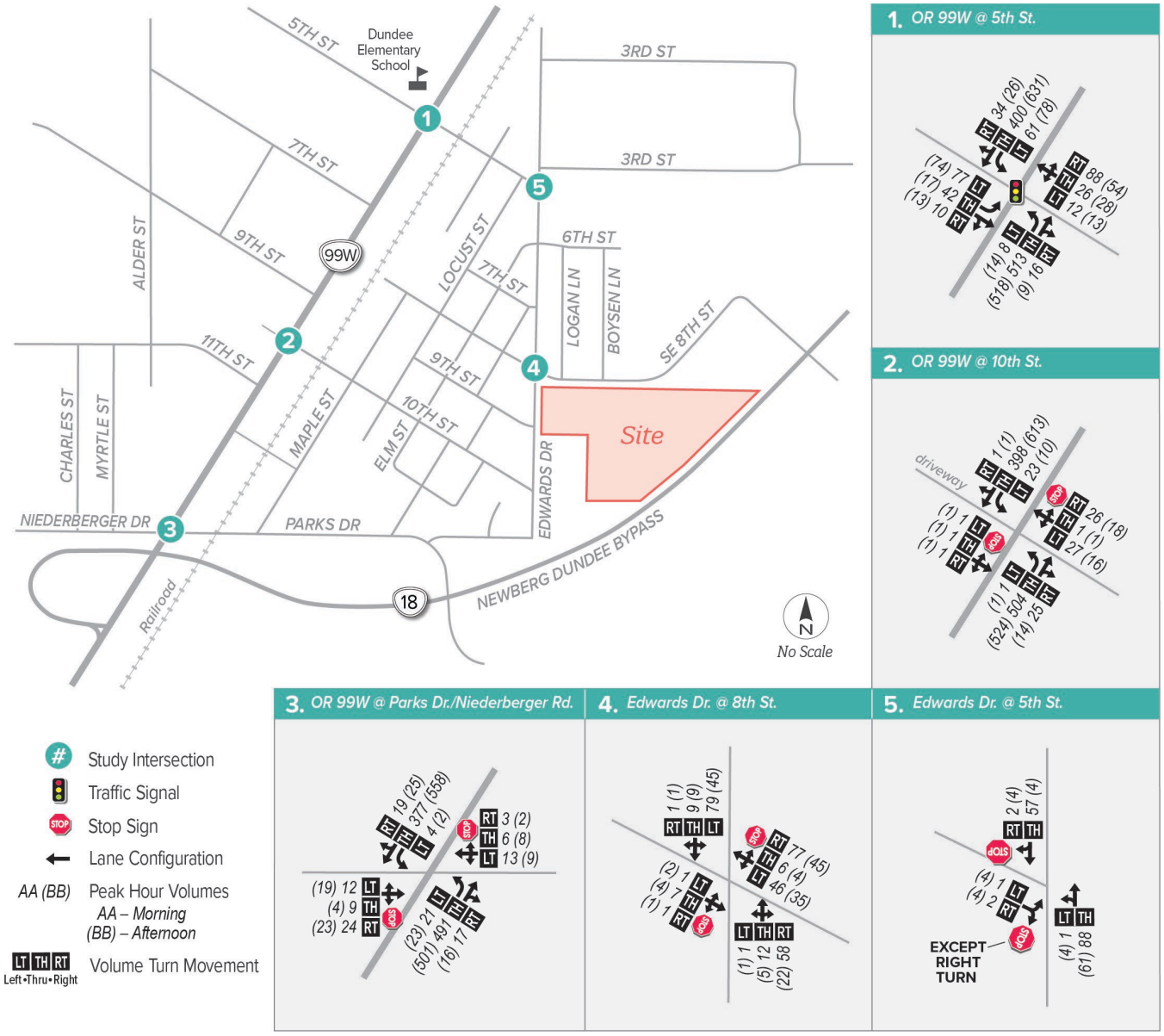


**FIGURE 5: BUILD AM AND AFTERNOON PEAK HOUR VOLUMES (2024)**

## FUTURE INTERSECTION OPERATIONS

Future traffic operations at the study intersections were determined for the AM and Afternoon peak hours based on the Highway Capacity Manual (HCM) 6th Edition methodology for signalized and unsignalized intersections. Table 10 lists the estimated v/c ratio, delay, and LOS of each study intersection for the AM peak hour under No Build and Build conditions. As shown, all study intersections are estimated to meet the City's operating standard and ODOT mobility targets.

**TABLE 10: FUTURE INTERSECTION OPERATIONS (2024) – AM PEAK**

| STUDY INTERSECTION | OPERATING STANDARD / MOBILITY TARGET | NO BUILD | | | BUILD | | |
|---|---|---|---|---|---|---|---|
| | | V/C RATIO | DELAY (SECS) | LOS | V/C RATIO | DELAY (SECS) | LOS |
| **SIGNALIZED** | | | | | | | |
| OR 99W/ 5TH ST | v/c ≤ 0.85 | 0.56 | 10.7 | B | 0.65 | 13.7 | B |
| **TWO-WAY STOP CONTROLLED** | | | | | | | |
| OR 99W/ 10TH ST | v/c ≤ 0.85 | 0.11 | 18.7 | A/C | 0.25 | 23.6 | A/C |
| OR 99W/ PARKS DR/ NIEDERBERGER RD | v/c ≤ 0.85 | 0.15 | 19.6 | A/C | 0.20 | 21.9 | A/C |
| EDWARDS DR/ 8TH ST | LOS D | 0.01 | 9.0 | A/A | 0.23 | 10.9 | A/B |
| EDWARDS DR/ 5TH ST | LOS D | 0.01 | 8.6 | A/A | 0.01 | 9.3 | A/A |

**SIGNALIZED INTERSECTION:**
Delay = Average Intersection Delay (sec.)
v/c = Volume-to-Capacity Ratio
LOS = Level of Service

**TWO-WAY STOP CONTROLLED INTERSECTION:**
Delay = Critical Movement Approach Delay (sec.)
v/c = Critical Movement Volume-to-Capacity Ratio
LOS = Level of Service (Major/Minor Road)

Table 11 lists the estimated v/c ratio, delay, and LOS of each study intersection for the Afternoon peak hour under No Build and Build conditions. As shown, all study intersections are estimated to meet the City's operating standard and ODOT mobility targets.

**TABLE 11: FUTURE INTERSECTION OPERATIONS (2024) – AFTERNOON PEAK**

| STUDY INTERSECTION | OPERATING STANDARD / MOBILITY TARGET | NO BUILD | | | BUILD | | |
|---|---|---|---|---|---|---|---|
| | | V/C RATIO | DELAY (SECS) | LOS | V/C RATIO | DELAY (SECS) | LOS |
| **SIGNALIZED** | | | | | | | |
| OR 99W/ 5TH ST | v/c ≤ 0.85 | 0.60 | 10.3 | B | 0.63 | 12.3 | B |
| **TWO-WAY STOP CONTROLLED** | | | | | | | |
| OR 99W/ 10TH ST | v/c ≤ 0.85 | 0.04 | 18.5 | A/C | 0.19 | 26.2 | A/D |
| OR 99W/ PARKS DR/ NIEDERBERGER RD | v/c ≤ 0.85 | 0.24 | 28.7 | A/D | 0.28 | 31.0 | A/D |
| EDWARDS DR/ 8TH ST | LOS D | 0.01 | 9.3 | A/A | 0.14 | 9.7 | A/A |

| STUDY INTERSECTION | OPERATING STANDARD / MOBILITY TARGET | NO BUILD | | | BUILD | | |
|---|---|---|---|---|---|---|---|
| | | V/C RATIO | DELAY (SECS) | LOS | V/C RATIO | DELAY (SECS) | LOS |
| EDWARDS DR/ 5TH ST | LOS D | 0.01 | 8.7 | A/A | 0.01 | 9.1 | A/A |

**SIGNALIZED INTERSECTION:**
Delay = Average Intersection Delay (sec.)
v/c = Volume-to-Capacity Ratio
LOS = Level of Service

**TWO-WAY STOP CONTROLLED INTERSECTION:**
Delay = Critical Movement Approach Delay (sec.)
v/c = Critical Movement Volume-to-Capacity Ratio
LOS = Level of Service (Major/Minor Road)

## SAFE ROUTES TO SCHOOL

Safe Routes to School are safe walking and biking routes to and from schools. They are typically characterized by marked pedestrian crossings, sidewalks, and bike lanes, flashing beacons, and other enhancements. Safe Routes to School aim to make it safe, convenient, and fun for children to walk and bicycle to and from schools. The goal is to improve safety while increasing health and physical activity.

The school walk zone, or walking boundary, is typically a subset of the enrollment zone. School walking boundaries may be defined by State or Local policy, but if not, a general rule of thumb is that the walking boundary is 1/2 mile or 1-mile out from an elementary school, sometimes farther for middle and high schools. Walk zones defined by policy typically indicate the area within which students are NOT provided with bus service.

Based on the existing street network and infrastructure, the suggested walking boundary for the new elementary school is bound by the railroad to the west, 3rd Street to the north, and the Newberg-Dundee By-Pass to the south/east.

Recommendations for improved connectivity and continuity of pedestrian and bicycle facilities within the walking boundary were based on an evaluation of the existing infrastructure. The location of the recommended improvements can be found in Figure 6 and are listed below:

- New sidewalk or path infill along Edwards Dr, Parks Dr, and 10th Street
- Frontage Improvements along the project site frontage on 8th Street and Edwards Drive. See the Project Site Frontage section for the required cross section.
- New marked crosswalk on the west leg of Edwards Dr/10th Street
- New marked school crosswalks on the south, west, and east leg of Edwards Dr/8th Street
- 20-mph School Speed Zone on 8th Street and Edwards Dr along the project frontage.

The School District will be responsible for the improvements directly adjacent to the property frontage. However, the implementation plan for the remaining Safe Routes to School (SRTS) sidewalk infill and crossing improvement needs listed here will be determined through a partnered

effort by the Newberg-Dundee School District and City of Dundee. Further discussion is needed between the School District and City.

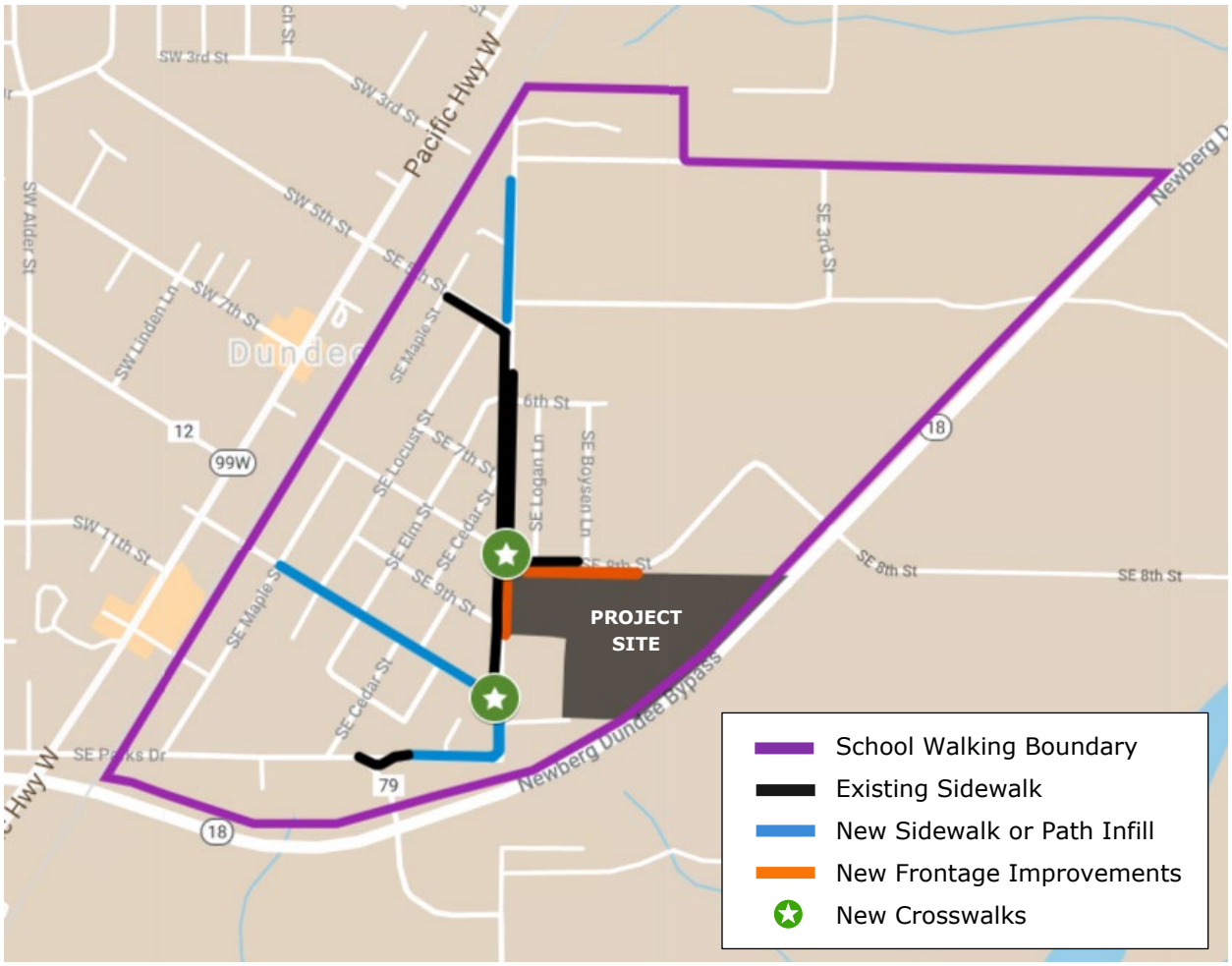


**FIGURE 6: SAFE ROUTES TO SCHOOL FIGURE**

## SITE PLAN EVALUATION

The following site plan evaluation is based on the draft diagrammatic site plan provided by the school district. The site plan can be found in the appendix.

### PROJECT SITE FRONTAGE

The roadway along the project site frontage is required to meet the City's cross-section standards for the designated road classification. Along the project site frontage, 8th Street is classified as a Parkway Collector and Edwards Drive is classified as a Collector. The City's TSP[11] provides the cross-section requirements for these roadway classifications and the project applicant is required to

[11] Dundee Transportation System Plan, City of Dundee, 2015.

provide half-street improvements fronting the project site. This includes approximately 740 ft of improvements to 8th Street and 400 ft of improvements to Edwards Drive.

**FIGURE 7: CROSS SECTION REQUIREMENTS FOR FRONTAGE IMPROVEMENTS**

## ACCESS SPACING

The three proposed access points are required to meet the City's required spacing between intersections and driveways. According to the City's TSP[12], access spacing requirement for collectors is 75 feet. Based on the provided site plan, the three driveway access points are spaced greater than 75 feet apart. It is recommended, however, that the two school bus driveways be aligned with the local street connections on the north side of 8th Street (SE Logan Lane and SE Boysen Lane). The driveways as shown on the current site plan are offset to these local streets, which can introduce additional crash risk for turning vehicles.

## SIGHT DISTANCE AT ACCESS POINTS

According to industry standards, the necessary intersection sight distance needed for left-turning vehicles to make a safe turn is 280 feet, based on a speed of 25 mph.[13] Based on preliminary sight distance measurements, there is sufficient sight distance at the proposed driveways.

Prior to occupancy, sight distance at any proposed access points will need to be verified, documented, and stamped by a registered professional Civil or Traffic Engineer licensed in the State of Oregon to assure that buildings, signs, or landscaping does not restrict sight distance.

## ON-SITE CIRCULATION

[12] Dundee Transportation System Plan, City of Dundee, 2015.

[13] Table 9-7 and Table 9-9, A Policy on Geometric Design of Highways and Streets, 7th Edition, AASHTO, 2018.

The proposed site plan provided shows two vehicle parking areas. The western parking lot is designated as the bus drop-off/pick-up area and is accessed by the two western driveways on 8th Street. It includes 19 vehicle parking spaces (including 4 ADA parking stalls) and enough curb space to accommodate up to 7 regular size school buses.

The eastern parking lot is designated as the parent drop-off/pick-up area and has 79 vehicle parking stalls and is accessed by the eastern driveway on 8th Street. There is approximately 300 feet of curb space for parent vehicles to drop-off/pick-up students. The vehicle drive aisles appear to be sufficient width for two-way traffic.

## PARKING

The proposed project is required to comply with the City code for the number of vehicular parking stalls and bicycle parking spaces that are provided on site.[14] On the provided site plan, there are 98 parking spots, with 4 of them designated as ADA parking spaces. The City of Dundee development code requires that there should be a minimum of 2 parking spaces per classroom. Currently, the number of classrooms has not yet been decided.

No bicycle parking is shown on the site plan. The City code requires that a minimum of 8 spaces per classroom be provided at an elementary school.

**TABLE 12: PARKING REQUIREMENTS**

| LAND USE | NUMBER OF CLASSROOMS | PARKING REQUIREMENT | PARKING STALLS | | |
|---|---|---|---|---|---|
| | | | MIN. | MAX. | ADA |
| ELEMENTARY SCHOOL | TBD | 2 vehicle stalls/ classroom | TBD | - | TBD |
| | | 8 bicycle spaces/ classroom | TBD | - | - |

[14] Chapter 17.304, Parking and Loading, Title 17 Development Code, Passed February 16, 2021.

## PROJECT SUMMARY

The proposed elementary school will have a capacity of 350 students. Three site accesses to the site are proposed on 8th Street. Below is a summary of the traffic impact analysis for the elementary school.

### TRIP GENERATION

- The 350-student elementary school is estimated to generate a total of 235 (127 in, 108 out) AM peak hour trips and 119 (54 in, 65 out) Afternoon peak hour trips.

### INTERSECTION OPERATIONS

- All study intersections meet City standards under all analysis scenarios. No mitigations are required.

### SAFE ROUTES TO SCHOOL

The School District should coordinate with the City of Dundee to agree on a funding and implementation plan for any of the following safe routes to school projects that are not along the property frontage.

- Sidewalk infill along Edwards Drive, Parks Drive, and 10th St for Safe Routes to School (assuming that all students west of railroad and OR 99W and outside of a 1-mile radius are offered school bus service to the school).
- Install marked school crosswalks on the south, east, and west legs of Edwards Drive/8th Street intersection.
- Install a marked school crosswalk on the west leg of Edwards Drive/10th Street intersection.
- Install a 20-mph school speed zone on Edwards Drive and 8th Street along the school frontage.

### SITE PLAN EVALUATION

- The project applicant is required to provide half-street improvements consistent with City roadway standards. This includes approximately 740 ft of improvements to 8th Street and 400 ft of improvements to Edwards Drive.
- It is recommended that the site driveways on 8th Street be aligned with the local street connections on the north side (SE Logan Lane and SE Boysen Lane). Offset intersections can create potential safety issues.
- Prior to occupancy, sight distance at any proposed access points will need to be verified, documented, and stamped by a registered professional Civil or Traffic Engineer licensed in the State of Oregon to assure that buildings, signs, or landscaping does not restrict sight distance.

# APPENDIX

# APPENDIX CONTENTS

**SECTION 1. SITE PLAN**

**SECTION 2. TRAFFIC COUNT DATA**

**SECTION 3: COVID-19 ADJUSTMENT WORKSHEET**

**SECTION 4: SEASONAL ADJUSTMENT FACTOR WORKSHEET**

**SECTION 5: CRASH DATA (2015 – 2019)**

**SECTION 6: HCM REPORTS – EXISTING 2021**

**SECTION 7: HCM REPORTS – FUTURE 2024**

# SECTION 1. SITE PLAN

8TH AVE.
PARKING
PARKING
DUNDEE
ELEMENTARY
SCHOOL BUILDING
EDWARDS
PLAYING
FIELDS
NEWBERG DUNDEE BYPASS
PROPROSED GREEN TRAIL

# SECTION 2. TRAFFIC COUNT DATA

ALL TRAFFIC DATA SERVICES
(303) 216-2439
www.alltrafficdata.net

**Location:** 1 HWY 99W & 5TH ST AM
**Date:** Tuesday, June 15, 2021
**Peak Hour:** 07:05 AM - 08:05 AM
**Peak 15-Minutes:** 07:25 AM - 07:40 AM

## Peak Hour

### Motorized Vehicles

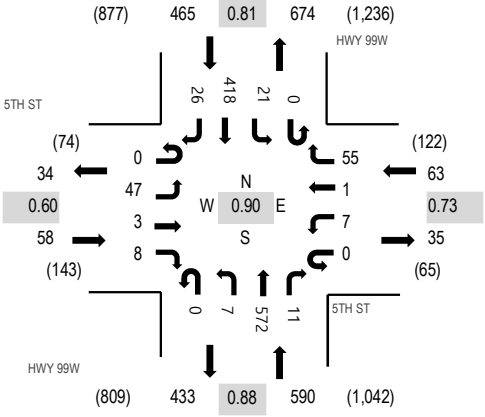


### Heavy Vehicles

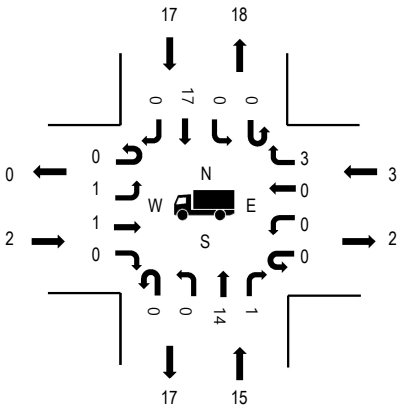


### Pedestrians

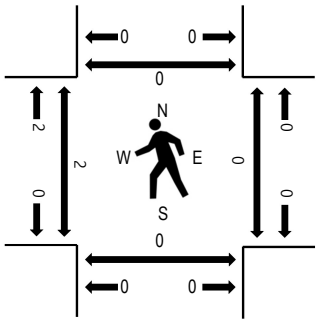


Note: Total study counts contained in parentheses.

| | HV% | PHF |
|---|---|---|
| EB | 3.4% | 0.60 |
| WB | 4.8% | 0.73 |
| NB | 2.5% | 0.88 |
| SB | 3.7% | 0.81 |
| All | 3.1% | 0.90 |

## Traffic Counts - Motorized Vehicles

| Interval Start Time | 5TH ST Eastbound | | | | 5TH ST Westbound | | | | HWY 99W Northbound | | | | HWY 99W Southbound | | | | | Rolling Hour |
|---|---|---|---|---|---|---|---|---|---|---|---|---|---|---|---|---|---|---|
| | U-Turn | Left | Thru | Right | U-Turn | Left | Thru | Right | U-Turn | Left | Thru | Right | U-Turn | Left | Thru | Right | Total | |
| 7:00 AM | 0 | 3 | 0 | 1 | 0 | 0 | 0 | 4 | 0 | 0 | 47 | 0 | 0 | 0 | 26 | 1 | 82 | 1,173 |
| 7:05 AM | 0 | 2 | 0 | 0 | 0 | 0 | 0 | 5 | 0 | 0 | 52 | 2 | 0 | 1 | 34 | 1 | 97 | 1,176 |
| 7:10 AM | 0 | 5 | 0 | 1 | 0 | 0 | 0 | 4 | 0 | 0 | 55 | 0 | 0 | 1 | 36 | 1 | 103 | 1,154 |
| 7:15 AM | 0 | 3 | 0 | 1 | 0 | 1 | 0 | 3 | 0 | 2 | 53 | 0 | 0 | 2 | 30 | 3 | 98 | 1,112 |
| 7:20 AM | 0 | 1 | 1 | 2 | 0 | 1 | 0 | 6 | 0 | 0 | 57 | 0 | 0 | 0 | 33 | 2 | 103 | 1,077 |
| 7:25 AM | 0 | 6 | 0 | 0 | 0 | 1 | 0 | 7 | 0 | 1 | 53 | 0 | 0 | 2 | 32 | 3 | 105 | 1,052 |
| 7:30 AM | 0 | 3 | 0 | 0 | 0 | 0 | 0 | 3 | 0 | 0 | 47 | 2 | 0 | 5 | 49 | 2 | 111 | 1,048 |
| 7:35 AM | 0 | 5 | 0 | 2 | 0 | 1 | 1 | 8 | 0 | 1 | 40 | 1 | 0 | 2 | 47 | 1 | 109 | 1,028 |
| 7:40 AM | 0 | 3 | 0 | 1 | 0 | 0 | 0 | 6 | 0 | 0 | 37 | 0 | 0 | 2 | 34 | 2 | 85 | 1,012 |
| 7:45 AM | 0 | 7 | 0 | 0 | 0 | 0 | 0 | 6 | 0 | 1 | 35 | 2 | 0 | 2 | 42 | 2 | 97 | 1,024 |
| 7:50 AM | 0 | 4 | 1 | 0 | 0 | 0 | 0 | 2 | 0 | 1 | 59 | 2 | 0 | 3 | 23 | 7 | 102 | 1,027 |
| 7:55 AM | 0 | 3 | 1 | 1 | 0 | 1 | 0 | 4 | 0 | 0 | 37 | 1 | 0 | 0 | 33 | 0 | 81 | 1,014 |
| 8:00 AM | 0 | 5 | 0 | 0 | 0 | 2 | 0 | 1 | 0 | 1 | 47 | 1 | 0 | 1 | 25 | 2 | 85 | 1,011 |
| 8:05 AM | 0 | 4 | 0 | 0 | 0 | 1 | 0 | 2 | 0 | 0 | 30 | 2 | 0 | 3 | 30 | 3 | 75 | |
| 8:10 AM | 0 | 3 | 0 | 0 | 0 | 0 | 0 | 2 | 0 | 0 | 32 | 0 | 0 | 1 | 22 | 1 | 61 | |
| 8:15 AM | 0 | 4 | 0 | 0 | 0 | 0 | 0 | 4 | 0 | 1 | 28 | 0 | 0 | 3 | 23 | 0 | 63 | |
| 8:20 AM | 0 | 8 | 0 | 0 | 0 | 0 | 0 | 9 | 0 | 0 | 29 | 1 | 0 | 2 | 27 | 2 | 78 | |
| 8:25 AM | 0 | 6 | 0 | 0 | 0 | 0 | 1 | 1 | 0 | 2 | 44 | 0 | 0 | 1 | 42 | 4 | 101 | |
| 8:30 AM | 0 | 10 | 1 | 4 | 0 | 1 | 2 | 2 | 0 | 1 | 35 | 0 | 0 | 3 | 27 | 5 | 91 | |
| 8:35 AM | 0 | 12 | 1 | 3 | 0 | 1 | 1 | 3 | 0 | 0 | 42 | 0 | 0 | 1 | 27 | 2 | 93 | |
| 8:40 AM | 0 | 5 | 1 | 0 | 0 | 0 | 2 | 4 | 0 | 0 | 52 | 0 | 0 | 2 | 27 | 4 | 97 | |
| 8:45 AM | 0 | 7 | 0 | 0 | 0 | 0 | 0 | 8 | 0 | 1 | 38 | 0 | 0 | 1 | 42 | 3 | 100 | |
| 8:50 AM | 0 | 9 | 0 | 1 | 0 | 1 | 0 | 5 | 0 | 0 | 31 | 2 | 0 | 2 | 36 | 2 | 89 | |
| 8:55 AM | 0 | 2 | 0 | 0 | 0 | 1 | 0 | 4 | 0 | 0 | 33 | 1 | 0 | 2 | 33 | 2 | 78 | |
| Count Total | 0 | 120 | 6 | 17 | 0 | 12 | 7 | 103 | 0 | 12 | 1,013 | 17 | 0 | 42 | 780 | 55 | 2,184 | |
| Peak Hour | 0 | 47 | 3 | 8 | 0 | 7 | 1 | 55 | 0 | 7 | 572 | 11 | 0 | 21 | 418 | 26 | 1,176 | |

**Location:** 1 HWY 99W & 5TH ST AM

## Traffic Counts - Heavy Vehicles, Bicycles on Road, and Pedestrians/Bicycles on Crosswalk

| Interval Start Time | Heavy Vehicles | | | | | Interval Start Time | Bicycles on Roadway | | | | | Interval Start Time | Pedestrians/Bicycles on Crosswalk | | | | |
|---|---|---|---|---|---|---|---|---|---|---|---|---|---|---|---|---|---|
| | EB | NB | WB | SB | Total | | EB | NB | WB | SB | Total | | EB | NB | WB | SB | Total |
| 7:00 AM | 0 | 1 | 0 | 3 | 4 | 7:00 AM | 0 | 0 | 0 | 0 | 0 | 7:00 AM | 0 | 0 | 1 | 0 | 1 |
| 7:05 AM | 0 | 1 | 0 | 2 | 3 | 7:05 AM | 0 | 0 | 0 | 0 | 0 | 7:05 AM | 1 | 0 | 0 | 0 | 1 |
| 7:10 AM | 0 | 2 | 0 | 0 | 2 | 7:10 AM | 0 | 0 | 0 | 0 | 0 | 7:10 AM | 0 | 0 | 0 | 0 | 0 |
| 7:15 AM | 0 | 3 | 0 | 2 | 5 | 7:15 AM | 0 | 0 | 0 | 0 | 0 | 7:15 AM | 0 | 0 | 0 | 0 | 0 |
| 7:20 AM | 1 | 0 | 1 | 1 | 3 | 7:20 AM | 0 | 0 | 0 | 0 | 0 | 7:20 AM | 0 | 0 | 0 | 0 | 0 |
| 7:25 AM | 0 | 4 | 2 | 1 | 7 | 7:25 AM | 0 | 0 | 0 | 0 | 0 | 7:25 AM | 0 | 0 | 0 | 0 | 0 |
| 7:30 AM | 1 | 1 | 0 | 0 | 2 | 7:30 AM | 0 | 0 | 0 | 0 | 0 | 7:30 AM | 0 | 0 | 0 | 0 | 0 |
| 7:35 AM | 0 | 1 | 0 | 1 | 2 | 7:35 AM | 0 | 0 | 0 | 0 | 0 | 7:35 AM | 1 | 0 | 0 | 0 | 1 |
| 7:40 AM | 0 | 0 | 0 | 1 | 1 | 7:40 AM | 0 | 0 | 0 | 0 | 0 | 7:40 AM | 0 | 0 | 0 | 0 | 0 |
| 7:45 AM | 0 | 0 | 0 | 3 | 3 | 7:45 AM | 0 | 0 | 0 | 0 | 0 | 7:45 AM | 0 | 0 | 0 | 0 | 0 |
| 7:50 AM | 0 | 1 | 0 | 3 | 4 | 7:50 AM | 0 | 0 | 0 | 0 | 0 | 7:50 AM | 0 | 0 | 0 | 0 | 0 |
| 7:55 AM | 0 | 1 | 0 | 1 | 2 | 7:55 AM | 0 | 0 | 0 | 0 | 0 | 7:55 AM | 0 | 0 | 0 | 0 | 0 |
| 8:00 AM | 0 | 1 | 0 | 2 | 3 | 8:00 AM | 0 | 0 | 0 | 0 | 0 | 8:00 AM | 0 | 0 | 0 | 0 | 0 |
| 8:05 AM | 0 | 2 | 0 | 2 | 4 | 8:05 AM | 0 | 0 | 0 | 0 | 0 | 8:05 AM | 0 | 0 | 0 | 0 | 0 |
| 8:10 AM | 0 | 1 | 0 | 0 | 1 | 8:10 AM | 0 | 0 | 0 | 0 | 0 | 8:10 AM | 0 | 0 | 0 | 0 | 0 |
| 8:15 AM | 0 | 0 | 0 | 2 | 2 | 8:15 AM | 0 | 0 | 0 | 0 | 0 | 8:15 AM | 0 | 0 | 0 | 0 | 0 |
| 8:20 AM | 0 | 0 | 0 | 2 | 2 | 8:20 AM | 0 | 0 | 0 | 0 | 0 | 8:20 AM | 0 | 0 | 0 | 0 | 0 |
| 8:25 AM | 0 | 1 | 0 | 6 | 7 | 8:25 AM | 0 | 0 | 0 | 0 | 0 | 8:25 AM | 0 | 0 | 0 | 0 | 0 |
| 8:30 AM | 1 | 1 | 1 | 1 | 4 | 8:30 AM | 0 | 0 | 0 | 0 | 0 | 8:30 AM | 0 | 0 | 0 | 0 | 0 |
| 8:35 AM | 3 | 2 | 0 | 0 | 5 | 8:35 AM | 0 | 0 | 0 | 0 | 0 | 8:35 AM | 0 | 0 | 0 | 0 | 0 |
| 8:40 AM | 0 | 2 | 0 | 1 | 3 | 8:40 AM | 0 | 0 | 0 | 0 | 0 | 8:40 AM | 0 | 0 | 0 | 0 | 0 |
| 8:45 AM | 0 | 0 | 0 | 4 | 4 | 8:45 AM | 0 | 0 | 0 | 0 | 0 | 8:45 AM | 0 | 0 | 0 | 1 | 1 |
| 8:50 AM | 0 | 1 | 0 | 2 | 3 | 8:50 AM | 0 | 0 | 0 | 0 | 0 | 8:50 AM | 2 | 2 | 0 | 1 | 5 |
| 8:55 AM | 0 | 2 | 0 | 3 | 5 | 8:55 AM | 0 | 0 | 0 | 0 | 0 | 8:55 AM | 0 | 3 | 0 | 0 | 3 |
| Count Total | 6 | 28 | 4 | 43 | 81 | Count Total | 0 | 0 | 0 | 0 | 0 | Count Total | 4 | 5 | 1 | 2 | 12 |
| Peak Hour | 2 | 15 | 3 | 17 | 37 | Peak Hour | 0 | 0 | 0 | 0 | 0 | Peak Hour | 2 | 0 | 0 | 0 | 2 |

**Location:** 2 HWY 99W & 10TH ST AM

ALL TRAFFIC DATA SERVICES
(303) 216-2439
www.alltrafficdata.net

**Location:** 2 HWY 99W & 10TH ST AM
**Date:** Tuesday, June 15, 2021
**Peak Hour:** 07:05 AM - 08:05 AM
**Peak 15-Minutes:** 07:20 AM - 07:35 AM

## Peak Hour

### Motorized Vehicles

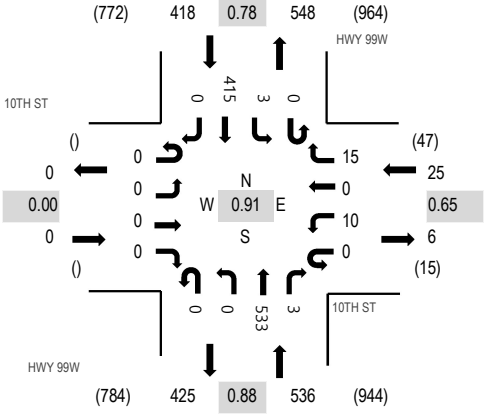


### Heavy Vehicles

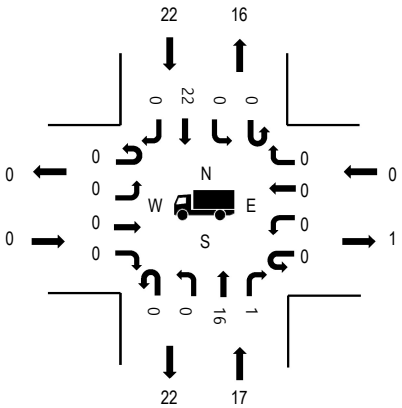


### Pedestrians

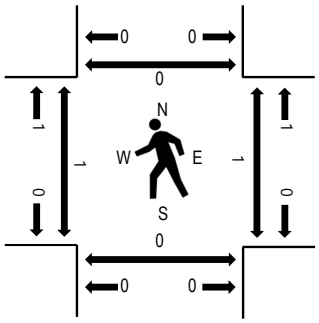


Note: Total study counts contained in parentheses.

| | HV% | PHF |
|---|---|---|
| EB | 0.0% | 0.00 |
| WB | 0.0% | 0.65 |
| NB | 3.2% | 0.88 |
| SB | 5.3% | 0.78 |
| All | 4.0% | 0.91 |

## Traffic Counts - Motorized Vehicles

| Interval Start Time | 10TH ST Eastbound | | | | 10TH ST Westbound | | | | HWY 99W Northbound | | | | HWY 99W Southbound | | | | Total | Rolling Hour |
|---|---|---|---|---|---|---|---|---|---|---|---|---|---|---|---|---|---|---|
| | U-Turn | Left | Thru | Right | U-Turn | Left | Thru | Right | U-Turn | Left | Thru | Right | U-Turn | Left | Thru | Right | | |
| 7:00 AM | 0 | 0 | 0 | 0 | 0 | 0 | 0 | 0 | 0 | 0 | 37 | 1 | 0 | 0 | 22 | 0 | 60 | 967 |
| 7:05 AM | 0 | 0 | 0 | 0 | 0 | 0 | 0 | 1 | 0 | 0 | 45 | 0 | 0 | 0 | 30 | 0 | 76 | 979 |
| 7:10 AM | 0 | 0 | 0 | 0 | 0 | 0 | 0 | 2 | 0 | 0 | 60 | 0 | 0 | 0 | 35 | 0 | 97 | 965 |
| 7:15 AM | 0 | 0 | 0 | 0 | 0 | 1 | 0 | 0 | 0 | 0 | 40 | 0 | 0 | 0 | 36 | 0 | 77 | 925 |
| 7:20 AM | 0 | 0 | 0 | 0 | 0 | 3 | 0 | 1 | 0 | 0 | 52 | 0 | 0 | 1 | 32 | 0 | 89 | 911 |
| 7:25 AM | 0 | 0 | 0 | 0 | 0 | 2 | 0 | 2 | 0 | 0 | 45 | 1 | 0 | 0 | 34 | 0 | 84 | 887 |
| 7:30 AM | 0 | 0 | 0 | 0 | 0 | 2 | 0 | 0 | 0 | 0 | 46 | 0 | 0 | 0 | 48 | 0 | 96 | 874 |
| 7:35 AM | 0 | 0 | 0 | 0 | 0 | 0 | 0 | 1 | 0 | 0 | 28 | 0 | 0 | 0 | 54 | 0 | 83 | 844 |
| 7:40 AM | 0 | 0 | 0 | 0 | 0 | 0 | 0 | 1 | 0 | 0 | 36 | 0 | 0 | 0 | 23 | 0 | 60 | 835 |
| 7:45 AM | 0 | 0 | 0 | 0 | 0 | 1 | 0 | 4 | 0 | 0 | 43 | 0 | 0 | 1 | 38 | 0 | 87 | 838 |
| 7:50 AM | 0 | 0 | 0 | 0 | 0 | 0 | 0 | 1 | 0 | 0 | 55 | 0 | 0 | 0 | 26 | 0 | 82 | 834 |
| 7:55 AM | 0 | 0 | 0 | 0 | 0 | 0 | 0 | 0 | 0 | 0 | 39 | 0 | 0 | 1 | 36 | 0 | 76 | 808 |
| 8:00 AM | 0 | 0 | 0 | 0 | 0 | 1 | 0 | 2 | 0 | 0 | 44 | 2 | 0 | 0 | 23 | 0 | 72 | 796 |
| 8:05 AM | 0 | 0 | 0 | 0 | 0 | 1 | 0 | 0 | 0 | 0 | 27 | 0 | 0 | 0 | 34 | 0 | 62 | |
| 8:10 AM | 0 | 0 | 0 | 0 | 0 | 2 | 0 | 1 | 0 | 0 | 27 | 0 | 0 | 1 | 26 | 0 | 57 | |
| 8:15 AM | 0 | 0 | 0 | 0 | 0 | 0 | 0 | 0 | 0 | 0 | 32 | 1 | 0 | 0 | 30 | 0 | 63 | |
| 8:20 AM | 0 | 0 | 0 | 0 | 0 | 2 | 0 | 2 | 0 | 0 | 34 | 1 | 0 | 1 | 25 | 0 | 65 | |
| 8:25 AM | 0 | 0 | 0 | 0 | 0 | 0 | 0 | 1 | 0 | 0 | 28 | 0 | 0 | 1 | 41 | 0 | 71 | |
| 8:30 AM | 0 | 0 | 0 | 0 | 0 | 1 | 0 | 0 | 0 | 0 | 38 | 0 | 0 | 2 | 25 | 0 | 66 | |
| 8:35 AM | 0 | 0 | 0 | 0 | 0 | 2 | 0 | 1 | 0 | 0 | 44 | 0 | 0 | 0 | 27 | 0 | 74 | |
| 8:40 AM | 0 | 0 | 0 | 0 | 0 | 1 | 0 | 2 | 0 | 0 | 30 | 1 | 0 | 0 | 29 | 0 | 63 | |
| 8:45 AM | 0 | 0 | 0 | 0 | 0 | 1 | 0 | 1 | 0 | 0 | 46 | 0 | 0 | 0 | 35 | 0 | 83 | |
| 8:50 AM | 0 | 0 | 0 | 0 | 0 | 0 | 0 | 2 | 0 | 0 | 25 | 0 | 0 | 0 | 29 | 0 | 56 | |
| 8:55 AM | 0 | 0 | 0 | 0 | 0 | 0 | 0 | 2 | 0 | 0 | 36 | 0 | 0 | 0 | 26 | 0 | 64 | |
| Count Total | 0 | 0 | 0 | 0 | 0 | 20 | 0 | 27 | 0 | 0 | 937 | 7 | 0 | 8 | 764 | 0 | 1,763 | |
| Peak Hour | 0 | 0 | 0 | 0 | 0 | 10 | 0 | 15 | 0 | 0 | 533 | 3 | 0 | 3 | 415 | 0 | 979 | |

**Location:** 2 HWY 99W & 10TH ST AM

## Traffic Counts - Heavy Vehicles, Bicycles on Road, and Pedestrians/Bicycles on Crosswalk

| Interval Start Time | Heavy Vehicles | | | | | Interval Start Time | Bicycles on Roadway | | | | | Interval Start Time | Pedestrians/Bicycles on Crosswalk | | | | |
|---|---|---|---|---|---|---|---|---|---|---|---|---|---|---|---|---|---|
| | EB | NB | WB | SB | Total | | EB | NB | WB | SB | Total | | EB | NB | WB | SB | Total |
| 7:00 AM | 0 | 2 | 0 | 1 | 3 | 7:00 AM | 0 | 0 | 0 | 0 | 0 | 7:00 AM | 0 | 0 | 0 | 0 | 0 |
| 7:05 AM | 0 | 0 | 0 | 4 | 4 | 7:05 AM | 0 | 0 | 0 | 0 | 0 | 7:05 AM | 0 | 0 | 0 | 0 | 0 |
| 7:10 AM | 0 | 2 | 0 | 0 | 2 | 7:10 AM | 0 | 0 | 0 | 0 | 0 | 7:10 AM | 0 | 0 | 0 | 0 | 0 |
| 7:15 AM | 0 | 3 | 0 | 1 | 4 | 7:15 AM | 0 | 0 | 0 | 0 | 0 | 7:15 AM | 0 | 0 | 0 | 0 | 0 |
| 7:20 AM | 0 | 0 | 0 | 2 | 2 | 7:20 AM | 0 | 0 | 0 | 0 | 0 | 7:20 AM | 0 | 0 | 0 | 0 | 0 |
| 7:25 AM | 0 | 5 | 0 | 0 | 5 | 7:25 AM | 0 | 0 | 0 | 0 | 0 | 7:25 AM | 0 | 0 | 0 | 0 | 0 |
| 7:30 AM | 0 | 1 | 0 | 2 | 3 | 7:30 AM | 0 | 0 | 0 | 0 | 0 | 7:30 AM | 0 | 0 | 0 | 0 | 0 |
| 7:35 AM | 0 | 1 | 0 | 0 | 1 | 7:35 AM | 0 | 0 | 0 | 0 | 0 | 7:35 AM | 0 | 0 | 0 | 0 | 0 |
| 7:40 AM | 0 | 1 | 0 | 1 | 2 | 7:40 AM | 0 | 0 | 0 | 0 | 0 | 7:40 AM | 0 | 0 | 0 | 0 | 0 |
| 7:45 AM | 0 | 0 | 0 | 3 | 3 | 7:45 AM | 0 | 0 | 0 | 0 | 0 | 7:45 AM | 0 | 0 | 0 | 0 | 0 |
| 7:50 AM | 0 | 1 | 0 | 3 | 4 | 7:50 AM | 0 | 0 | 0 | 0 | 0 | 7:50 AM | 1 | 0 | 0 | 0 | 1 |
| 7:55 AM | 0 | 1 | 0 | 3 | 4 | 7:55 AM | 0 | 0 | 0 | 0 | 0 | 7:55 AM | 0 | 0 | 1 | 0 | 1 |
| 8:00 AM | 0 | 2 | 0 | 3 | 5 | 8:00 AM | 0 | 0 | 0 | 0 | 0 | 8:00 AM | 0 | 0 | 0 | 0 | 0 |
| 8:05 AM | 0 | 3 | 0 | 2 | 5 | 8:05 AM | 0 | 0 | 0 | 0 | 0 | 8:05 AM | 0 | 0 | 0 | 0 | 0 |
| 8:10 AM | 0 | 0 | 0 | 0 | 0 | 8:10 AM | 0 | 0 | 0 | 0 | 0 | 8:10 AM | 0 | 0 | 0 | 0 | 0 |
| 8:15 AM | 0 | 0 | 0 | 1 | 1 | 8:15 AM | 0 | 0 | 0 | 0 | 0 | 8:15 AM | 0 | 0 | 0 | 0 | 0 |
| 8:20 AM | 0 | 0 | 0 | 2 | 2 | 8:20 AM | 0 | 0 | 0 | 0 | 0 | 8:20 AM | 0 | 0 | 0 | 0 | 0 |
| 8:25 AM | 0 | 1 | 0 | 5 | 6 | 8:25 AM | 0 | 0 | 0 | 0 | 0 | 8:25 AM | 0 | 0 | 0 | 0 | 0 |
| 8:30 AM | 0 | 1 | 0 | 0 | 1 | 8:30 AM | 0 | 0 | 0 | 0 | 0 | 8:30 AM | 0 | 0 | 0 | 0 | 0 |
| 8:35 AM | 0 | 1 | 0 | 0 | 1 | 8:35 AM | 0 | 0 | 0 | 0 | 0 | 8:35 AM | 0 | 0 | 0 | 0 | 0 |
| 8:40 AM | 0 | 2 | 0 | 1 | 3 | 8:40 AM | 0 | 0 | 0 | 0 | 0 | 8:40 AM | 0 | 0 | 0 | 0 | 0 |
| 8:45 AM | 0 | 0 | 0 | 4 | 4 | 8:45 AM | 0 | 0 | 0 | 0 | 0 | 8:45 AM | 1 | 0 | 1 | 0 | 2 |
| 8:50 AM | 0 | 0 | 0 | 1 | 1 | 8:50 AM | 0 | 0 | 0 | 0 | 0 | 8:50 AM | 2 | 0 | 0 | 0 | 2 |
| 8:55 AM | 0 | 2 | 0 | 2 | 4 | 8:55 AM | 0 | 0 | 0 | 0 | 0 | 8:55 AM | 1 | 0 | 0 | 0 | 1 |
| Count Total | 0 | 29 | 0 | 41 | 70 | Count Total | 0 | 0 | 0 | 0 | 0 | Count Total | 5 | 0 | 2 | 0 | 7 |
| Peak Hour | 0 | 17 | 0 | 22 | 39 | Peak Hour | 0 | 0 | 0 | 0 | 0 | Peak Hour | 1 | 0 | 1 | 0 | 2 |

**Location:** 3 HWY 99W & PARKS DR AM

ALL TRAFFIC DATA SERVICES
(303) 216-2439
www.alltrafficdata.net

**Location:** 3 HWY 99W & PARKS DR AM
**Date:** Tuesday, June 15, 2021
**Peak Hour:** 07:05 AM - 08:05 AM
**Peak 15-Minutes:** 07:20 AM - 07:35 AM

## Peak Hour

### Motorized Vehicles

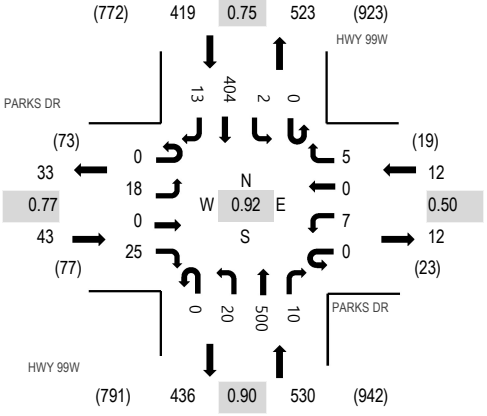


### Heavy Vehicles

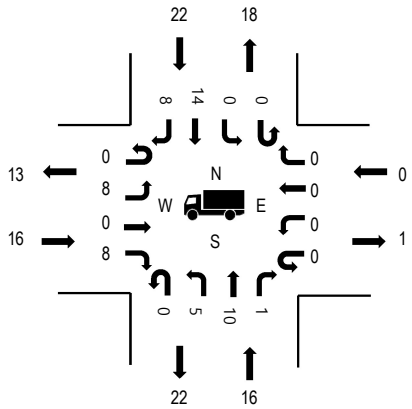


### Pedestrians

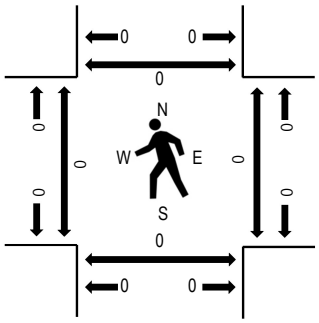


Note: Total study counts contained in parentheses.

| | HV% | PHF |
|---|---|---|
| EB | 37.2% | 0.77 |
| WB | 0.0% | 0.50 |
| NB | 3.0% | 0.90 |
| SB | 5.3% | 0.75 |
| All | 5.4% | 0.92 |

## Traffic Counts - Motorized Vehicles

| Interval Start Time | PARKS DR Eastbound | | | | PARKS DR Westbound | | | | HWY 99W Northbound | | | | HWY 99W Southbound | | | | Total | Rolling Hour |
|---|---|---|---|---|---|---|---|---|---|---|---|---|---|---|---|---|---|---|
| | U-Turn | Left | Thru | Right | U-Turn | Left | Thru | Right | U-Turn | Left | Thru | Right | U-Turn | Left | Thru | Right | | |
| 7:00 AM | 0 | 1 | 0 | 0 | 0 | 0 | 0 | 0 | 0 | 1 | 38 | 0 | 0 | 1 | 20 | 1 | 62 | 993 |
| 7:05 AM | 0 | 0 | 0 | 2 | 0 | 1 | 0 | 0 | 0 | 1 | 40 | 0 | 0 | 0 | 24 | 2 | 70 | 1,004 |
| 7:10 AM | 0 | 1 | 0 | 3 | 0 | 1 | 0 | 0 | 0 | 4 | 57 | 0 | 0 | 1 | 37 | 0 | 104 | 991 |
| 7:15 AM | 0 | 6 | 0 | 3 | 0 | 0 | 0 | 0 | 0 | 1 | 36 | 0 | 0 | 0 | 31 | 2 | 79 | 943 |
| 7:20 AM | 0 | 2 | 0 | 0 | 0 | 0 | 0 | 1 | 0 | 4 | 45 | 1 | 0 | 0 | 34 | 1 | 88 | 929 |
| 7:25 AM | 0 | 2 | 0 | 1 | 0 | 0 | 0 | 2 | 0 | 0 | 39 | 1 | 0 | 0 | 33 | 0 | 78 | 911 |
| 7:30 AM | 0 | 1 | 0 | 3 | 0 | 0 | 0 | 0 | 0 | 3 | 43 | 1 | 0 | 0 | 55 | 1 | 107 | 906 |
| 7:35 AM | 0 | 1 | 0 | 6 | 0 | 0 | 0 | 0 | 0 | 0 | 24 | 1 | 0 | 0 | 52 | 0 | 84 | 864 |
| 7:40 AM | 0 | 1 | 0 | 0 | 0 | 1 | 0 | 0 | 0 | 2 | 35 | 0 | 0 | 0 | 26 | 2 | 67 | 863 |
| 7:45 AM | 0 | 0 | 0 | 1 | 0 | 0 | 0 | 1 | 0 | 2 | 42 | 3 | 0 | 1 | 37 | 2 | 89 | 865 |
| 7:50 AM | 0 | 2 | 0 | 2 | 0 | 3 | 0 | 0 | 0 | 2 | 55 | 1 | 0 | 0 | 19 | 1 | 85 | 852 |
| 7:55 AM | 0 | 0 | 0 | 1 | 0 | 1 | 0 | 1 | 0 | 0 | 41 | 1 | 0 | 0 | 34 | 1 | 80 | 831 |
| 8:00 AM | 0 | 2 | 0 | 3 | 0 | 0 | 0 | 0 | 0 | 1 | 43 | 1 | 0 | 0 | 22 | 1 | 73 | 817 |
| 8:05 AM | 0 | 2 | 0 | 3 | 0 | 0 | 0 | 0 | 0 | 1 | 20 | 1 | 0 | 0 | 27 | 3 | 57 | |
| 8:10 AM | 0 | 1 | 0 | 1 | 0 | 0 | 0 | 0 | 0 | 1 | 24 | 2 | 0 | 0 | 27 | 0 | 56 | |
| 8:15 AM | 0 | 0 | 0 | 0 | 0 | 1 | 0 | 0 | 0 | 1 | 33 | 0 | 0 | 1 | 28 | 1 | 65 | |
| 8:20 AM | 0 | 1 | 0 | 2 | 0 | 1 | 0 | 0 | 0 | 5 | 36 | 0 | 0 | 0 | 24 | 1 | 70 | |
| 8:25 AM | 0 | 0 | 0 | 4 | 0 | 0 | 0 | 1 | 0 | 0 | 30 | 0 | 0 | 1 | 34 | 3 | 73 | |
| 8:30 AM | 0 | 1 | 0 | 3 | 0 | 0 | 0 | 0 | 0 | 1 | 32 | 1 | 0 | 0 | 26 | 1 | 65 | |
| 8:35 AM | 0 | 1 | 0 | 1 | 0 | 0 | 0 | 0 | 0 | 3 | 45 | 0 | 0 | 1 | 31 | 1 | 83 | |
| 8:40 AM | 0 | 1 | 0 | 3 | 0 | 0 | 0 | 0 | 0 | 1 | 35 | 0 | 0 | 0 | 28 | 1 | 69 | |
| 8:45 AM | 0 | 1 | 0 | 2 | 0 | 0 | 0 | 1 | 0 | 2 | 37 | 0 | 0 | 2 | 28 | 3 | 76 | |
| 8:50 AM | 0 | 0 | 0 | 4 | 0 | 2 | 0 | 0 | 0 | 2 | 23 | 1 | 0 | 0 | 31 | 1 | 64 | |
| 8:55 AM | 0 | 2 | 0 | 0 | 0 | 0 | 1 | 0 | 0 | 2 | 34 | 0 | 0 | 0 | 24 | 3 | 66 | |
| Count Total | 0 | 29 | 0 | 48 | 0 | 11 | 1 | 7 | 0 | 40 | 887 | 15 | 0 | 8 | 732 | 32 | 1,810 | |
| Peak Hour | 0 | 18 | 0 | 25 | 0 | 7 | 0 | 5 | 0 | 20 | 500 | 10 | 0 | 2 | 404 | 13 | 1,004 | |

**Location:** 3 HWY 99W & PARKS DR AM

## Traffic Counts - Heavy Vehicles, Bicycles on Road, and Pedestrians/Bicycles on Crosswalk

| Interval Start Time | Heavy Vehicles | | | | | Interval Start Time | Bicycles on Roadway | | | | | Interval Start Time | Pedestrians/Bicycles on Crosswalk | | | | |
|---|---|---|---|---|---|---|---|---|---|---|---|---|---|---|---|---|---|
| | EB | NB | WB | SB | Total | | EB | NB | WB | SB | Total | | EB | NB | WB | SB | Total |
| 7:00 AM | 1 | 1 | 0 | 1 | 3 | 7:00 AM | 0 | 0 | 0 | 0 | 0 | 7:00 AM | 0 | 0 | 0 | 0 | 0 |
| 7:05 AM | 0 | 1 | 0 | 4 | 5 | 7:05 AM | 0 | 0 | 0 | 0 | 0 | 7:05 AM | 0 | 0 | 0 | 0 | 0 |
| 7:10 AM | 1 | 3 | 0 | 0 | 4 | 7:10 AM | 0 | 0 | 0 | 0 | 0 | 7:10 AM | 0 | 0 | 0 | 0 | 0 |
| 7:15 AM | 4 | 0 | 0 | 0 | 4 | 7:15 AM | 0 | 0 | 0 | 0 | 0 | 7:15 AM | 0 | 0 | 0 | 0 | 0 |
| 7:20 AM | 1 | 4 | 0 | 2 | 7 | 7:20 AM | 0 | 0 | 0 | 0 | 0 | 7:20 AM | 0 | 0 | 0 | 0 | 0 |
| 7:25 AM | 2 | 2 | 0 | 1 | 5 | 7:25 AM | 0 | 0 | 0 | 0 | 0 | 7:25 AM | 0 | 0 | 0 | 0 | 0 |
| 7:30 AM | 1 | 0 | 0 | 3 | 4 | 7:30 AM | 0 | 0 | 0 | 0 | 0 | 7:30 AM | 0 | 0 | 0 | 0 | 0 |
| 7:35 AM | 2 | 0 | 0 | 0 | 2 | 7:35 AM | 0 | 0 | 0 | 0 | 0 | 7:35 AM | 0 | 0 | 0 | 0 | 0 |
| 7:40 AM | 0 | 2 | 0 | 1 | 3 | 7:40 AM | 0 | 0 | 0 | 0 | 0 | 7:40 AM | 0 | 0 | 0 | 0 | 0 |
| 7:45 AM | 0 | 1 | 0 | 4 | 5 | 7:45 AM | 0 | 0 | 0 | 0 | 0 | 7:45 AM | 0 | 0 | 0 | 0 | 0 |
| 7:50 AM | 2 | 0 | 0 | 3 | 5 | 7:50 AM | 0 | 0 | 0 | 0 | 0 | 7:50 AM | 0 | 0 | 0 | 0 | 0 |
| 7:55 AM | 0 | 1 | 0 | 2 | 3 | 7:55 AM | 0 | 0 | 0 | 0 | 0 | 7:55 AM | 0 | 0 | 0 | 0 | 0 |
| 8:00 AM | 3 | 2 | 0 | 2 | 7 | 8:00 AM | 0 | 0 | 0 | 0 | 0 | 8:00 AM | 0 | 0 | 0 | 0 | 0 |
| 8:05 AM | 2 | 2 | 0 | 3 | 7 | 8:05 AM | 0 | 0 | 0 | 0 | 0 | 8:05 AM | 0 | 0 | 0 | 0 | 0 |
| 8:10 AM | 1 | 0 | 0 | 0 | 1 | 8:10 AM | 0 | 0 | 0 | 0 | 0 | 8:10 AM | 0 | 0 | 0 | 0 | 0 |
| 8:15 AM | 0 | 1 | 1 | 1 | 3 | 8:15 AM | 0 | 0 | 0 | 0 | 0 | 8:15 AM | 0 | 0 | 0 | 0 | 0 |
| 8:20 AM | 0 | 1 | 0 | 2 | 3 | 8:20 AM | 0 | 0 | 0 | 0 | 0 | 8:20 AM | 0 | 0 | 0 | 0 | 0 |
| 8:25 AM | 1 | 1 | 0 | 4 | 6 | 8:25 AM | 0 | 0 | 0 | 0 | 0 | 8:25 AM | 0 | 0 | 0 | 0 | 0 |
| 8:30 AM | 2 | 0 | 0 | 1 | 3 | 8:30 AM | 0 | 0 | 0 | 0 | 0 | 8:30 AM | 0 | 0 | 0 | 0 | 0 |
| 8:35 AM | 1 | 3 | 0 | 0 | 4 | 8:35 AM | 0 | 0 | 0 | 0 | 0 | 8:35 AM | 0 | 0 | 0 | 0 | 0 |
| 8:40 AM | 2 | 2 | 0 | 1 | 5 | 8:40 AM | 0 | 0 | 0 | 0 | 0 | 8:40 AM | 0 | 0 | 0 | 0 | 0 |
| 8:45 AM | 0 | 2 | 0 | 4 | 6 | 8:45 AM | 0 | 0 | 0 | 0 | 0 | 8:45 AM | 0 | 0 | 0 | 0 | 0 |
| 8:50 AM | 1 | 1 | 0 | 2 | 4 | 8:50 AM | 0 | 0 | 0 | 0 | 0 | 8:50 AM | 0 | 0 | 0 | 0 | 0 |
| 8:55 AM | 2 | 0 | 0 | 2 | 4 | 8:55 AM | 0 | 0 | 0 | 0 | 0 | 8:55 AM | 0 | 0 | 0 | 0 | 0 |
| Count Total | 29 | 30 | 1 | 43 | 103 | Count Total | 0 | 0 | 0 | 0 | 0 | Count Total | 0 | 0 | 0 | 0 | 0 |
| Peak Hour | 16 | 16 | 0 | 22 | 54 | Peak Hour | 0 | 0 | 0 | 0 | 0 | Peak Hour | 0 | 0 | 0 | 0 | 0 |

**Location:** 4 SE EDWARDS DR & SE 8TH ST AM

ALL TRAFFIC DATA SERVICES
(303) 216-2439
www.alltrafficdata.net

**Location:** 4 SE EDWARDS DR & SE 8TH ST AM
**Date:** Tuesday, June 15, 2021
**Peak Hour:** 07:25 AM - 08:25 AM
**Peak 15-Minutes:** 08:10 AM - 08:25 AM

## Peak Hour

### Motorized Vehicles

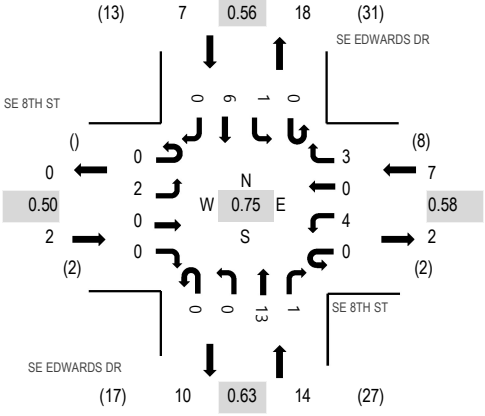


### Heavy Vehicles

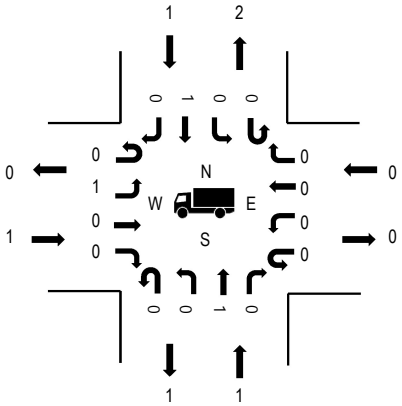


### Pedestrians

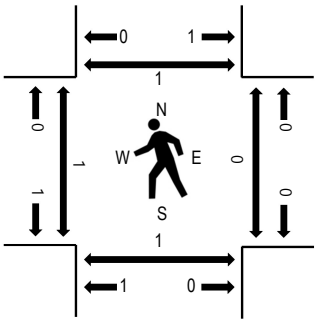


Note: Total study counts contained in parentheses.

| | HV% | PHF |
|---|---|---|
| EB | 50.0% | 0.50 |
| WB | 0.0% | 0.58 |
| NB | 7.1% | 0.63 |
| SB | 14.3% | 0.56 |
| All | 10.0% | 0.75 |

## Traffic Counts - Motorized Vehicles

| Interval Start Time | SE 8TH ST Eastbound | | | | SE 8TH ST Westbound | | | | SE EDWARDS DR Northbound | | | | SE EDWARDS DR Southbound | | | | Total | Rolling Hour |
|---|---|---|---|---|---|---|---|---|---|---|---|---|---|---|---|---|---|---|
| | U-Turn | Left | Thru | Right | U-Turn | Left | Thru | Right | U-Turn | Left | Thru | Right | U-Turn | Left | Thru | Right | | |
| 7:00 AM | 0 | 0 | 0 | 0 | 0 | 0 | 0 | 0 | 0 | 0 | 0 | 0 | 0 | 0 | 1 | 0 | 1 | 23 |
| 7:05 AM | 0 | 0 | 0 | 0 | 0 | 1 | 0 | 0 | 0 | 0 | 0 | 0 | 0 | 0 | 0 | 0 | 1 | 23 |
| 7:10 AM | 0 | 0 | 0 | 0 | 0 | 0 | 0 | 0 | 0 | 0 | 3 | 0 | 0 | 0 | 1 | 0 | 4 | 25 |
| 7:15 AM | 0 | 0 | 0 | 0 | 0 | 0 | 0 | 0 | 0 | 0 | 1 | 0 | 0 | 0 | 0 | 0 | 1 | 25 |
| 7:20 AM | 0 | 0 | 0 | 0 | 0 | 0 | 0 | 0 | 0 | 0 | 0 | 0 | 0 | 0 | 0 | 0 | 0 | 26 |
| 7:25 AM | 0 | 1 | 0 | 0 | 0 | 0 | 0 | 0 | 0 | 0 | 3 | 0 | 0 | 0 | 0 | 0 | 4 | 30 |
| 7:30 AM | 0 | 0 | 0 | 0 | 0 | 1 | 0 | 0 | 0 | 0 | 2 | 0 | 0 | 0 | 0 | 0 | 3 | 29 |
| 7:35 AM | 0 | 0 | 0 | 0 | 0 | 0 | 0 | 0 | 0 | 0 | 0 | 0 | 0 | 0 | 0 | 0 | 0 | 28 |
| 7:40 AM | 0 | 0 | 0 | 0 | 0 | 0 | 0 | 2 | 0 | 0 | 2 | 0 | 0 | 0 | 1 | 0 | 5 | 28 |
| 7:45 AM | 0 | 0 | 0 | 0 | 0 | 1 | 0 | 0 | 0 | 0 | 1 | 0 | 0 | 0 | 0 | 0 | 2 | 25 |
| 7:50 AM | 0 | 0 | 0 | 0 | 0 | 0 | 0 | 0 | 0 | 0 | 0 | 0 | 0 | 0 | 1 | 0 | 1 | 27 |
| 7:55 AM | 0 | 0 | 0 | 0 | 0 | 0 | 0 | 0 | 0 | 0 | 0 | 0 | 0 | 0 | 1 | 0 | 1 | 28 |
| 8:00 AM | 0 | 0 | 0 | 0 | 0 | 0 | 0 | 0 | 0 | 0 | 1 | 0 | 0 | 0 | 0 | 0 | 1 | 27 |
| 8:05 AM | 0 | 0 | 0 | 0 | 0 | 1 | 0 | 1 | 0 | 0 | 0 | 0 | 0 | 1 | 0 | 0 | 3 | |
| 8:10 AM | 0 | 1 | 0 | 0 | 0 | 0 | 0 | 0 | 0 | 0 | 1 | 0 | 0 | 0 | 2 | 0 | 4 | |
| 8:15 AM | 0 | 0 | 0 | 0 | 0 | 0 | 0 | 0 | 0 | 0 | 1 | 0 | 0 | 0 | 1 | 0 | 2 | |
| 8:20 AM | 0 | 0 | 0 | 0 | 0 | 1 | 0 | 0 | 0 | 0 | 2 | 1 | 0 | 0 | 0 | 0 | 4 | |
| 8:25 AM | 0 | 0 | 0 | 0 | 0 | 0 | 0 | 0 | 0 | 0 | 1 | 0 | 0 | 0 | 2 | 0 | 3 | |
| 8:30 AM | 0 | 0 | 0 | 0 | 0 | 0 | 0 | 0 | 0 | 0 | 2 | 0 | 0 | 0 | 0 | 0 | 2 | |
| 8:35 AM | 0 | 0 | 0 | 0 | 0 | 0 | 0 | 0 | 0 | 0 | 0 | 0 | 0 | 0 | 0 | 0 | 0 | |
| 8:40 AM | 0 | 0 | 0 | 0 | 0 | 0 | 0 | 0 | 0 | 0 | 2 | 0 | 0 | 0 | 0 | 0 | 2 | |
| 8:45 AM | 0 | 0 | 0 | 0 | 0 | 0 | 0 | 0 | 0 | 0 | 3 | 0 | 0 | 0 | 1 | 0 | 4 | |
| 8:50 AM | 0 | 0 | 0 | 0 | 0 | 0 | 0 | 0 | 0 | 0 | 1 | 0 | 0 | 0 | 1 | 0 | 2 | |
| 8:55 AM | 0 | 0 | 0 | 0 | 0 | 0 | 0 | 0 | 0 | 0 | 0 | 0 | 0 | 0 | 0 | 0 | 0 | |
| Count Total | 0 | 2 | 0 | 0 | 0 | 5 | 0 | 3 | 0 | 0 | 26 | 1 | 0 | 1 | 12 | 0 | 50 | |
| Peak Hour | 0 | 2 | 0 | 0 | 0 | 4 | 0 | 3 | 0 | 0 | 13 | 1 | 0 | 1 | 6 | 0 | 30 | |

**Location:** 4 SE EDWARDS DR & SE 8TH ST AM

## Traffic Counts - Heavy Vehicles, Bicycles on Road, and Pedestrians/Bicycles on Crosswalk

| Interval Start Time | Heavy Vehicles | | | | | Interval Start Time | Bicycles on Roadway | | | | | Interval Start Time | Pedestrians/Bicycles on Crosswalk | | | | |
|---|---|---|---|---|---|---|---|---|---|---|---|---|---|---|---|---|---|
| | EB | NB | WB | SB | Total | | EB | NB | WB | SB | Total | | EB | NB | WB | SB | Total |
| 7:00 AM | 0 | 0 | 0 | 0 | 0 | 7:00 AM | 0 | 0 | 0 | 0 | 0 | 7:00 AM | 0 | 0 | 0 | 0 | 0 |
| 7:05 AM | 0 | 0 | 0 | 0 | 0 | 7:05 AM | 0 | 0 | 0 | 0 | 0 | 7:05 AM | 0 | 0 | 0 | 0 | 0 |
| 7:10 AM | 0 | 0 | 0 | 1 | 1 | 7:10 AM | 0 | 0 | 0 | 0 | 0 | 7:10 AM | 0 | 0 | 0 | 0 | 0 |
| 7:15 AM | 0 | 0 | 0 | 0 | 0 | 7:15 AM | 0 | 0 | 0 | 0 | 0 | 7:15 AM | 0 | 0 | 0 | 0 | 0 |
| 7:20 AM | 0 | 0 | 0 | 0 | 0 | 7:20 AM | 0 | 0 | 0 | 0 | 0 | 7:20 AM | 0 | 0 | 0 | 0 | 0 |
| 7:25 AM | 1 | 1 | 0 | 0 | 2 | 7:25 AM | 0 | 0 | 0 | 0 | 0 | 7:25 AM | 0 | 0 | 0 | 0 | 0 |
| 7:30 AM | 0 | 0 | 0 | 0 | 0 | 7:30 AM | 0 | 0 | 0 | 0 | 0 | 7:30 AM | 0 | 0 | 0 | 0 | 0 |
| 7:35 AM | 0 | 0 | 0 | 0 | 0 | 7:35 AM | 0 | 0 | 0 | 0 | 0 | 7:35 AM | 0 | 0 | 0 | 0 | 0 |
| 7:40 AM | 0 | 0 | 0 | 0 | 0 | 7:40 AM | 0 | 0 | 0 | 0 | 0 | 7:40 AM | 0 | 0 | 0 | 0 | 0 |
| 7:45 AM | 0 | 0 | 0 | 0 | 0 | 7:45 AM | 0 | 0 | 0 | 0 | 0 | 7:45 AM | 1 | 0 | 0 | 0 | 1 |
| 7:50 AM | 0 | 0 | 0 | 0 | 0 | 7:50 AM | 0 | 0 | 0 | 0 | 0 | 7:50 AM | 0 | 0 | 0 | 0 | 0 |
| 7:55 AM | 0 | 0 | 0 | 0 | 0 | 7:55 AM | 0 | 0 | 0 | 0 | 0 | 7:55 AM | 0 | 0 | 0 | 0 | 0 |
| 8:00 AM | 0 | 0 | 0 | 0 | 0 | 8:00 AM | 0 | 0 | 0 | 0 | 0 | 8:00 AM | 0 | 0 | 0 | 0 | 0 |
| 8:05 AM | 0 | 0 | 0 | 0 | 0 | 8:05 AM | 0 | 0 | 0 | 0 | 0 | 8:05 AM | 0 | 0 | 0 | 0 | 0 |
| 8:10 AM | 0 | 0 | 0 | 0 | 0 | 8:10 AM | 0 | 0 | 0 | 0 | 0 | 8:10 AM | 0 | 0 | 0 | 1 | 1 |
| 8:15 AM | 0 | 0 | 0 | 1 | 1 | 8:15 AM | 0 | 0 | 0 | 0 | 0 | 8:15 AM | 0 | 1 | 0 | 0 | 1 |
| 8:20 AM | 0 | 0 | 0 | 0 | 0 | 8:20 AM | 0 | 0 | 0 | 0 | 0 | 8:20 AM | 0 | 0 | 0 | 0 | 0 |
| 8:25 AM | 0 | 1 | 0 | 0 | 1 | 8:25 AM | 0 | 0 | 0 | 0 | 0 | 8:25 AM | 0 | 0 | 0 | 0 | 0 |
| 8:30 AM | 0 | 0 | 0 | 0 | 0 | 8:30 AM | 0 | 0 | 0 | 0 | 0 | 8:30 AM | 0 | 0 | 0 | 0 | 0 |
| 8:35 AM | 0 | 0 | 0 | 0 | 0 | 8:35 AM | 0 | 0 | 0 | 0 | 0 | 8:35 AM | 0 | 0 | 0 | 0 | 0 |
| 8:40 AM | 0 | 0 | 0 | 0 | 0 | 8:40 AM | 0 | 0 | 0 | 0 | 0 | 8:40 AM | 0 | 0 | 0 | 0 | 0 |
| 8:45 AM | 0 | 0 | 0 | 0 | 0 | 8:45 AM | 0 | 0 | 0 | 0 | 0 | 8:45 AM | 0 | 0 | 0 | 0 | 0 |
| 8:50 AM | 0 | 0 | 0 | 0 | 0 | 8:50 AM | 0 | 0 | 0 | 0 | 0 | 8:50 AM | 0 | 0 | 0 | 0 | 0 |
| 8:55 AM | 0 | 0 | 0 | 0 | 0 | 8:55 AM | 0 | 0 | 0 | 0 | 0 | 8:55 AM | 0 | 0 | 0 | 0 | 0 |
| Count Total | 1 | 2 | 0 | 2 | 5 | Count Total | 0 | 0 | 0 | 0 | 0 | Count Total | 1 | 1 | 0 | 1 | 3 |
| Peak Hour | 1 | 1 | 0 | 1 | 3 | Peak Hour | 0 | 0 | 0 | 0 | 0 | Peak Hour | 1 | 1 | 0 | 1 | 3 |

**Location:** 5 SE EDWARDS DR & SE 5TH ST AM

ALL TRAFFIC DATA SERVICES
(303) 216-2439
www.alltrafficdata.net

**Location:** 5 SE EDWARDS DR & SE 5TH ST AM
**Date:** Tuesday, June 15, 2021
**Peak Hour:** 07:55 AM - 08:55 AM
**Peak 15-Minutes:** 08:40 AM - 08:55 AM

## Peak Hour

### Motorized Vehicles

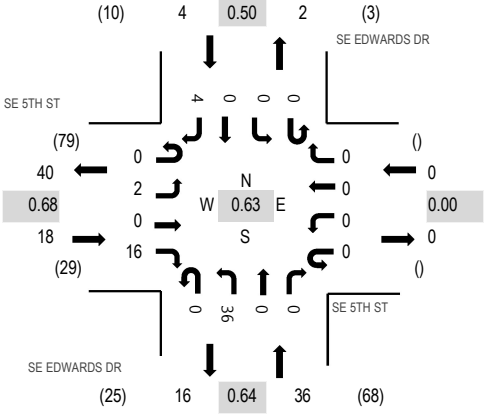


### Heavy Vehicles

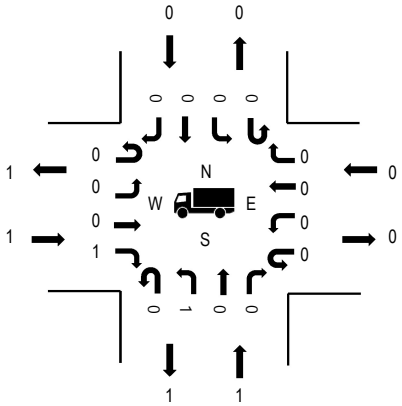


### Pedestrians

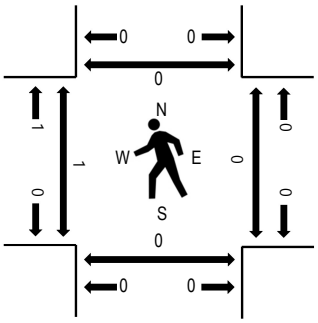


Note: Total study counts contained in parentheses.

| | HV% | PHF |
|---|---|---|
| EB | 5.6% | 0.68 |
| WB | 0.0% | 0.00 |
| NB | 2.8% | 0.64 |
| SB | 0.0% | 0.50 |
| All | 3.4% | 0.63 |

## Traffic Counts - Motorized Vehicles

| Interval Start Time | SE 5TH ST Eastbound | | | | SE 5TH ST Westbound | | | | SE EDWARDS DR Northbound | | | | SE EDWARDS DR Southbound | | | | Total | Rolling Hour |
|---|---|---|---|---|---|---|---|---|---|---|---|---|---|---|---|---|---|---|
| | U-Turn | Left | Thru | Right | U-Turn | Left | Thru | Right | U-Turn | Left | Thru | Right | U-Turn | Left | Thru | Right | | |
| 7:00 AM | 0 | 0 | 0 | 1 | 0 | 0 | 0 | 0 | 0 | 1 | 0 | 0 | 0 | 0 | 0 | 1 | 3 | 49 |
| 7:05 AM | 0 | 0 | 0 | 0 | 0 | 0 | 0 | 0 | 0 | 2 | 0 | 0 | 0 | 0 | 0 | 1 | 3 | 48 |
| 7:10 AM | 0 | 0 | 0 | 1 | 0 | 0 | 0 | 0 | 0 | 5 | 0 | 0 | 0 | 0 | 0 | 0 | 6 | 50 |
| 7:15 AM | 0 | 0 | 0 | 1 | 0 | 0 | 0 | 0 | 0 | 3 | 0 | 0 | 0 | 0 | 0 | 2 | 6 | 48 |
| 7:20 AM | 0 | 0 | 0 | 0 | 0 | 0 | 0 | 0 | 0 | 1 | 0 | 0 | 0 | 0 | 0 | 0 | 1 | 45 |
| 7:25 AM | 0 | 0 | 0 | 0 | 0 | 0 | 0 | 0 | 0 | 5 | 0 | 0 | 0 | 0 | 0 | 1 | 6 | 49 |
| 7:30 AM | 1 | 0 | 0 | 1 | 0 | 0 | 0 | 0 | 0 | 4 | 0 | 0 | 0 | 0 | 0 | 0 | 6 | 45 |
| 7:35 AM | 0 | 1 | 0 | 0 | 0 | 0 | 0 | 0 | 0 | 1 | 0 | 0 | 0 | 0 | 0 | 1 | 3 | 48 |
| 7:40 AM | 0 | 0 | 0 | 1 | 0 | 0 | 0 | 0 | 0 | 6 | 0 | 0 | 0 | 0 | 0 | 0 | 7 | 47 |
| 7:45 AM | 0 | 0 | 0 | 1 | 0 | 0 | 0 | 0 | 0 | 1 | 0 | 0 | 0 | 0 | 0 | 0 | 2 | 46 |
| 7:50 AM | 0 | 0 | 0 | 2 | 0 | 0 | 0 | 0 | 0 | 1 | 0 | 0 | 0 | 0 | 0 | 0 | 3 | 54 |
| 7:55 AM | 0 | 0 | 0 | 0 | 0 | 0 | 0 | 0 | 0 | 3 | 0 | 0 | 0 | 0 | 0 | 0 | 3 | 58 |
| 8:00 AM | 0 | 0 | 0 | 1 | 0 | 0 | 0 | 0 | 0 | 0 | 0 | 0 | 0 | 0 | 0 | 1 | 2 | 58 |
| 8:05 AM | 0 | 0 | 0 | 2 | 0 | 0 | 0 | 0 | 0 | 3 | 0 | 0 | 0 | 0 | 0 | 0 | 5 | |
| 8:10 AM | 0 | 0 | 0 | 1 | 0 | 0 | 0 | 0 | 0 | 3 | 0 | 0 | 0 | 0 | 0 | 0 | 4 | |
| 8:15 AM | 0 | 0 | 0 | 1 | 0 | 0 | 0 | 0 | 0 | 2 | 0 | 0 | 0 | 0 | 0 | 0 | 3 | |
| 8:20 AM | 0 | 0 | 0 | 1 | 0 | 0 | 0 | 0 | 0 | 4 | 0 | 0 | 0 | 0 | 0 | 0 | 5 | |
| 8:25 AM | 0 | 0 | 0 | 1 | 0 | 0 | 0 | 0 | 0 | 1 | 0 | 0 | 0 | 0 | 0 | 0 | 2 | |
| 8:30 AM | 0 | 1 | 0 | 2 | 0 | 0 | 0 | 0 | 0 | 5 | 0 | 0 | 0 | 0 | 0 | 1 | 9 | |
| 8:35 AM | 0 | 0 | 0 | 1 | 0 | 0 | 0 | 0 | 0 | 1 | 0 | 0 | 0 | 0 | 0 | 0 | 2 | |
| 8:40 AM | 0 | 0 | 0 | 1 | 0 | 0 | 0 | 0 | 0 | 4 | 0 | 0 | 0 | 0 | 0 | 1 | 6 | |
| 8:45 AM | 0 | 0 | 0 | 3 | 0 | 0 | 0 | 0 | 0 | 6 | 0 | 0 | 0 | 0 | 0 | 1 | 10 | |
| 8:50 AM | 0 | 1 | 0 | 2 | 0 | 0 | 0 | 0 | 0 | 4 | 0 | 0 | 0 | 0 | 0 | 0 | 7 | |
| 8:55 AM | 0 | 0 | 0 | 1 | 0 | 0 | 0 | 0 | 0 | 2 | 0 | 0 | 0 | 0 | 0 | 0 | 3 | |
| Count Total | 1 | 3 | 0 | 25 | 0 | 0 | 0 | 0 | 0 | 68 | 0 | 0 | 0 | 0 | 0 | 10 | 107 | |
| Peak Hour | 0 | 2 | 0 | 16 | 0 | 0 | 0 | 0 | 0 | 36 | 0 | 0 | 0 | 0 | 0 | 4 | 58 | |

**Location:** 5 SE EDWARDS DR & SE 5TH ST AM

## Traffic Counts - Heavy Vehicles, Bicycles on Road, and Pedestrians/Bicycles on Crosswalk

| Interval Start Time | Heavy Vehicles | | | | | Interval Start Time | Bicycles on Roadway | | | | | Interval Start Time | Pedestrians/Bicycles on Crosswalk | | | | |
|---|---|---|---|---|---|---|---|---|---|---|---|---|---|---|---|---|---|
| | EB | NB | WB | SB | Total | | EB | NB | WB | SB | Total | | EB | NB | WB | SB | Total |
| 7:00 AM | 0 | 0 | 0 | 0 | 0 | 7:00 AM | 0 | 0 | 0 | 0 | 0 | 7:00 AM | 0 | 0 | 0 | 0 | 0 |
| 7:05 AM | 0 | 0 | 0 | 0 | 0 | 7:05 AM | 0 | 0 | 0 | 0 | 0 | 7:05 AM | 0 | 0 | 0 | 0 | 0 |
| 7:10 AM | 1 | 0 | 0 | 0 | 1 | 7:10 AM | 0 | 0 | 0 | 0 | 0 | 7:10 AM | 0 | 0 | 0 | 0 | 0 |
| 7:15 AM | 0 | 0 | 0 | 0 | 0 | 7:15 AM | 0 | 0 | 0 | 0 | 0 | 7:15 AM | 0 | 0 | 0 | 0 | 0 |
| 7:20 AM | 0 | 0 | 0 | 0 | 0 | 7:20 AM | 0 | 0 | 0 | 0 | 0 | 7:20 AM | 0 | 0 | 0 | 0 | 0 |
| 7:25 AM | 0 | 2 | 0 | 0 | 2 | 7:25 AM | 0 | 0 | 0 | 0 | 0 | 7:25 AM | 0 | 0 | 0 | 0 | 0 |
| 7:30 AM | 0 | 0 | 0 | 0 | 0 | 7:30 AM | 0 | 0 | 0 | 0 | 0 | 7:30 AM | 0 | 0 | 0 | 0 | 0 |
| 7:35 AM | 0 | 0 | 0 | 0 | 0 | 7:35 AM | 0 | 0 | 0 | 0 | 0 | 7:35 AM | 0 | 0 | 0 | 0 | 0 |
| 7:40 AM | 0 | 0 | 0 | 0 | 0 | 7:40 AM | 0 | 0 | 0 | 0 | 0 | 7:40 AM | 0 | 0 | 0 | 0 | 0 |
| 7:45 AM | 0 | 0 | 0 | 0 | 0 | 7:45 AM | 0 | 0 | 0 | 0 | 0 | 7:45 AM | 0 | 0 | 0 | 0 | 0 |
| 7:50 AM | 0 | 0 | 0 | 0 | 0 | 7:50 AM | 0 | 0 | 0 | 0 | 0 | 7:50 AM | 0 | 0 | 0 | 0 | 0 |
| 7:55 AM | 0 | 0 | 0 | 0 | 0 | 7:55 AM | 0 | 0 | 0 | 0 | 0 | 7:55 AM | 0 | 0 | 0 | 0 | 0 |
| 8:00 AM | 0 | 0 | 0 | 0 | 0 | 8:00 AM | 0 | 0 | 0 | 0 | 0 | 8:00 AM | 0 | 0 | 0 | 0 | 0 |
| 8:05 AM | 0 | 0 | 0 | 0 | 0 | 8:05 AM | 0 | 0 | 0 | 0 | 0 | 8:05 AM | 0 | 0 | 0 | 0 | 0 |
| 8:10 AM | 0 | 0 | 0 | 0 | 0 | 8:10 AM | 0 | 0 | 0 | 0 | 0 | 8:10 AM | 0 | 0 | 0 | 0 | 0 |
| 8:15 AM | 1 | 0 | 0 | 0 | 1 | 8:15 AM | 0 | 0 | 0 | 0 | 0 | 8:15 AM | 0 | 0 | 0 | 0 | 0 |
| 8:20 AM | 0 | 0 | 0 | 0 | 0 | 8:20 AM | 0 | 0 | 0 | 0 | 0 | 8:20 AM | 0 | 0 | 0 | 0 | 0 |
| 8:25 AM | 0 | 1 | 0 | 0 | 1 | 8:25 AM | 0 | 0 | 0 | 0 | 0 | 8:25 AM | 0 | 0 | 0 | 0 | 0 |
| 8:30 AM | 0 | 0 | 0 | 0 | 0 | 8:30 AM | 0 | 0 | 0 | 0 | 0 | 8:30 AM | 0 | 0 | 0 | 0 | 0 |
| 8:35 AM | 0 | 0 | 0 | 0 | 0 | 8:35 AM | 0 | 0 | 0 | 0 | 0 | 8:35 AM | 1 | 0 | 0 | 0 | 1 |
| 8:40 AM | 0 | 0 | 0 | 0 | 0 | 8:40 AM | 0 | 0 | 0 | 0 | 0 | 8:40 AM | 0 | 0 | 0 | 0 | 0 |
| 8:45 AM | 0 | 0 | 0 | 0 | 0 | 8:45 AM | 0 | 0 | 0 | 0 | 0 | 8:45 AM | 0 | 0 | 0 | 0 | 0 |
| 8:50 AM | 0 | 0 | 0 | 0 | 0 | 8:50 AM | 0 | 0 | 0 | 0 | 0 | 8:50 AM | 0 | 0 | 0 | 0 | 0 |
| 8:55 AM | 0 | 0 | 0 | 0 | 0 | 8:55 AM | 0 | 0 | 0 | 0 | 0 | 8:55 AM | 0 | 0 | 0 | 0 | 0 |
| Count Total | 2 | 3 | 0 | 0 | 5 | Count Total | 0 | 0 | 0 | 0 | 0 | Count Total | 1 | 0 | 0 | 0 | 1 |
| Peak Hour | 1 | 1 | 0 | 0 | 2 | Peak Hour | 0 | 0 | 0 | 0 | 0 | Peak Hour | 1 | 0 | 0 | 0 | 1 |

**Location:** 6 SCHOOL ACCESS & SE 5TH ST AM

ALL TRAFFIC DATA SERVICES
(303) 216-2439
www.alltrafficdata.net

**Location:** 6 SCHOOL ACCESS & SE 5TH ST AM
**Date:** Tuesday, June 15, 2021
**Peak Hour:** 07:50 AM - 08:50 AM
**Peak 15-Minutes:** 08:30 AM - 08:45 AM

## Peak Hour

### Motorized Vehicles

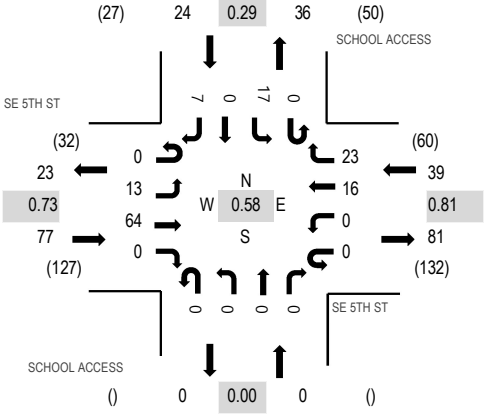


### Heavy Vehicles

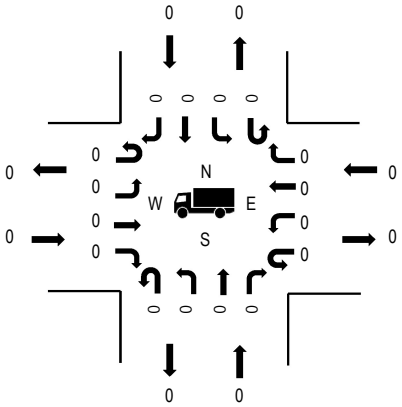


### Pedestrians

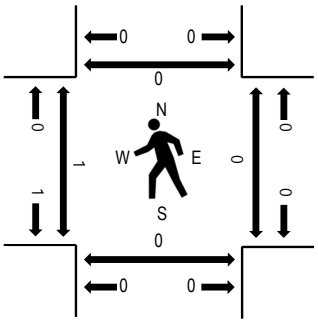


Note: Total study counts contained in parentheses.

| | HV% | PHF |
|---|---|---|
| EB | 0.0% | 0.73 |
| WB | 0.0% | 0.81 |
| NB | 0.0% | 0.00 |
| SB | 0.0% | 0.29 |
| All | 0.0% | 0.58 |

## Traffic Counts - Motorized Vehicles

| Interval Start Time | SE 5TH ST Eastbound | | | | SE 5TH ST Westbound | | | | SCHOOL ACCESS Northbound | | | | SCHOOL ACCESS Southbound | | | | Total | Rolling Hour |
|---|---|---|---|---|---|---|---|---|---|---|---|---|---|---|---|---|---|---|
| | U-Turn | Left | Thru | Right | U-Turn | Left | Thru | Right | U-Turn | Left | Thru | Right | U-Turn | Left | Thru | Right | | |
| 7:00 AM | 0 | 0 | 1 | 0 | 0 | 0 | 0 | 0 | 0 | 0 | 0 | 0 | 0 | 1 | 0 | 0 | 2 | 86 |
| 7:05 AM | 0 | 0 | 4 | 0 | 0 | 0 | 0 | 1 | 0 | 0 | 0 | 0 | 0 | 0 | 0 | 0 | 5 | 90 |
| 7:10 AM | 0 | 0 | 4 | 0 | 0 | 0 | 0 | 1 | 0 | 0 | 0 | 0 | 0 | 0 | 0 | 0 | 5 | 92 |
| 7:15 AM | 0 | 0 | 5 | 0 | 0 | 0 | 1 | 2 | 0 | 0 | 0 | 0 | 0 | 1 | 0 | 0 | 9 | 93 |
| 7:20 AM | 0 | 0 | 2 | 0 | 0 | 0 | 0 | 1 | 0 | 0 | 0 | 0 | 0 | 0 | 0 | 0 | 3 | 90 |
| 7:25 AM | 0 | 1 | 7 | 0 | 0 | 0 | 2 | 1 | 0 | 0 | 0 | 0 | 0 | 0 | 0 | 0 | 11 | 97 |
| 7:30 AM | 0 | 0 | 2 | 0 | 0 | 0 | 1 | 1 | 0 | 0 | 0 | 0 | 0 | 1 | 0 | 0 | 5 | 99 |
| 7:35 AM | 0 | 0 | 7 | 0 | 0 | 0 | 2 | 1 | 0 | 0 | 0 | 0 | 0 | 0 | 0 | 0 | 10 | 114 |
| 7:40 AM | 0 | 0 | 4 | 0 | 0 | 0 | 0 | 1 | 0 | 0 | 0 | 0 | 0 | 0 | 0 | 0 | 5 | 124 |
| 7:45 AM | 0 | 1 | 5 | 0 | 0 | 0 | 0 | 3 | 0 | 0 | 0 | 0 | 0 | 0 | 0 | 0 | 9 | 139 |
| 7:50 AM | 0 | 0 | 5 | 0 | 0 | 0 | 4 | 3 | 0 | 0 | 0 | 0 | 0 | 0 | 0 | 0 | 12 | 140 |
| 7:55 AM | 0 | 1 | 7 | 0 | 0 | 0 | 1 | 0 | 0 | 0 | 0 | 0 | 0 | 1 | 0 | 0 | 10 | 136 |
| 8:00 AM | 0 | 1 | 2 | 0 | 0 | 0 | 1 | 2 | 0 | 0 | 0 | 0 | 0 | 0 | 0 | 0 | 6 | 128 |
| 8:05 AM | 0 | 0 | 4 | 0 | 0 | 0 | 2 | 1 | 0 | 0 | 0 | 0 | 0 | 0 | 0 | 0 | 7 | |
| 8:10 AM | 0 | 0 | 5 | 0 | 0 | 0 | 0 | 1 | 0 | 0 | 0 | 0 | 0 | 0 | 0 | 0 | 6 | |
| 8:15 AM | 0 | 0 | 5 | 0 | 0 | 0 | 0 | 1 | 0 | 0 | 0 | 0 | 0 | 0 | 0 | 0 | 6 | |
| 8:20 AM | 0 | 1 | 7 | 0 | 0 | 0 | 2 | 0 | 0 | 0 | 0 | 0 | 0 | 0 | 0 | 0 | 10 | |
| 8:25 AM | 0 | 2 | 6 | 0 | 0 | 0 | 2 | 3 | 0 | 0 | 0 | 0 | 0 | 0 | 0 | 0 | 13 | |
| 8:30 AM | 0 | 2 | 8 | 0 | 0 | 0 | 0 | 4 | 0 | 0 | 0 | 0 | 0 | 5 | 0 | 1 | 20 | |
| 8:35 AM | 0 | 3 | 4 | 0 | 0 | 0 | 0 | 3 | 0 | 0 | 0 | 0 | 0 | 8 | 0 | 2 | 20 | |
| 8:40 AM | 0 | 3 | 7 | 0 | 0 | 0 | 1 | 4 | 0 | 0 | 0 | 0 | 0 | 2 | 0 | 3 | 20 | |
| 8:45 AM | 0 | 0 | 4 | 0 | 0 | 0 | 3 | 1 | 0 | 0 | 0 | 0 | 0 | 1 | 0 | 1 | 10 | |
| 8:50 AM | 0 | 0 | 7 | 0 | 0 | 0 | 1 | 0 | 0 | 0 | 0 | 0 | 0 | 0 | 0 | 0 | 8 | |
| 8:55 AM | 0 | 0 | 0 | 0 | 0 | 0 | 2 | 0 | 0 | 0 | 0 | 0 | 0 | 0 | 0 | 0 | 2 | |
| Count Total | 0 | 15 | 112 | 0 | 0 | 0 | 25 | 35 | 0 | 0 | 0 | 0 | 0 | 20 | 0 | 7 | 214 | |
| Peak Hour | 0 | 13 | 64 | 0 | 0 | 0 | 16 | 23 | 0 | 0 | 0 | 0 | 0 | 17 | 0 | 7 | 140 | |

**Location:** 6 SCHOOL ACCESS & SE 5TH ST AM

## Traffic Counts - Heavy Vehicles, Bicycles on Road, and Pedestrians/Bicycles on Crosswalk

| Interval Start Time | Heavy Vehicles | | | | | Interval Start Time | Bicycles on Roadway | | | | | Interval Start Time | Pedestrians/Bicycles on Crosswalk | | | | |
|---|---|---|---|---|---|---|---|---|---|---|---|---|---|---|---|---|---|
| | EB | NB | WB | SB | Total | | EB | NB | WB | SB | Total | | EB | NB | WB | SB | Total |
| 7:00 AM | 0 | 0 | 0 | 0 | 0 | 7:00 AM | 0 | 0 | 0 | 0 | 0 | 7:00 AM | 0 | 0 | 0 | 0 | 0 |
| 7:05 AM | 0 | 0 | 0 | 0 | 0 | 7:05 AM | 0 | 0 | 0 | 0 | 0 | 7:05 AM | 0 | 0 | 0 | 0 | 0 |
| 7:10 AM | 0 | 0 | 0 | 0 | 0 | 7:10 AM | 0 | 0 | 0 | 0 | 0 | 7:10 AM | 0 | 0 | 0 | 0 | 0 |
| 7:15 AM | 1 | 0 | 0 | 0 | 1 | 7:15 AM | 0 | 0 | 0 | 0 | 0 | 7:15 AM | 0 | 0 | 0 | 0 | 0 |
| 7:20 AM | 0 | 0 | 0 | 0 | 0 | 7:20 AM | 0 | 0 | 0 | 0 | 0 | 7:20 AM | 0 | 0 | 0 | 0 | 0 |
| 7:25 AM | 2 | 0 | 0 | 0 | 2 | 7:25 AM | 0 | 0 | 0 | 0 | 0 | 7:25 AM | 0 | 0 | 0 | 0 | 0 |
| 7:30 AM | 0 | 0 | 0 | 0 | 0 | 7:30 AM | 0 | 0 | 0 | 0 | 0 | 7:30 AM | 0 | 0 | 0 | 0 | 0 |
| 7:35 AM | 0 | 0 | 0 | 0 | 0 | 7:35 AM | 0 | 0 | 0 | 0 | 0 | 7:35 AM | 0 | 0 | 0 | 0 | 0 |
| 7:40 AM | 0 | 0 | 0 | 0 | 0 | 7:40 AM | 0 | 0 | 0 | 0 | 0 | 7:40 AM | 0 | 0 | 0 | 0 | 0 |
| 7:45 AM | 0 | 0 | 0 | 0 | 0 | 7:45 AM | 0 | 0 | 0 | 0 | 0 | 7:45 AM | 0 | 0 | 0 | 0 | 0 |
| 7:50 AM | 0 | 0 | 0 | 0 | 0 | 7:50 AM | 0 | 0 | 0 | 0 | 0 | 7:50 AM | 0 | 0 | 0 | 0 | 0 |
| 7:55 AM | 0 | 0 | 0 | 0 | 0 | 7:55 AM | 0 | 0 | 0 | 0 | 0 | 7:55 AM | 0 | 0 | 0 | 0 | 0 |
| 8:00 AM | 0 | 0 | 0 | 0 | 0 | 8:00 AM | 0 | 0 | 0 | 0 | 0 | 8:00 AM | 0 | 0 | 0 | 0 | 0 |
| 8:05 AM | 0 | 0 | 0 | 0 | 0 | 8:05 AM | 0 | 0 | 0 | 0 | 0 | 8:05 AM | 0 | 0 | 0 | 0 | 0 |
| 8:10 AM | 0 | 0 | 0 | 0 | 0 | 8:10 AM | 0 | 0 | 0 | 0 | 0 | 8:10 AM | 0 | 0 | 0 | 0 | 0 |
| 8:15 AM | 0 | 0 | 0 | 0 | 0 | 8:15 AM | 0 | 0 | 0 | 0 | 0 | 8:15 AM | 0 | 0 | 0 | 0 | 0 |
| 8:20 AM | 0 | 0 | 0 | 0 | 0 | 8:20 AM | 0 | 0 | 0 | 0 | 0 | 8:20 AM | 0 | 0 | 0 | 0 | 0 |
| 8:25 AM | 0 | 0 | 0 | 0 | 0 | 8:25 AM | 0 | 0 | 0 | 0 | 0 | 8:25 AM | 0 | 0 | 0 | 0 | 0 |
| 8:30 AM | 0 | 0 | 0 | 0 | 0 | 8:30 AM | 0 | 0 | 0 | 0 | 0 | 8:30 AM | 0 | 0 | 0 | 0 | 0 |
| 8:35 AM | 0 | 0 | 0 | 0 | 0 | 8:35 AM | 0 | 0 | 0 | 0 | 0 | 8:35 AM | 0 | 0 | 0 | 0 | 0 |
| 8:40 AM | 0 | 0 | 0 | 0 | 0 | 8:40 AM | 0 | 0 | 0 | 0 | 0 | 8:40 AM | 1 | 0 | 0 | 0 | 1 |
| 8:45 AM | 0 | 0 | 0 | 0 | 0 | 8:45 AM | 0 | 0 | 0 | 0 | 0 | 8:45 AM | 0 | 0 | 0 | 0 | 0 |
| 8:50 AM | 0 | 0 | 1 | 0 | 1 | 8:50 AM | 0 | 0 | 0 | 0 | 0 | 8:50 AM | 0 | 0 | 0 | 0 | 0 |
| 8:55 AM | 0 | 0 | 0 | 0 | 0 | 8:55 AM | 0 | 0 | 0 | 0 | 0 | 8:55 AM | 0 | 0 | 0 | 0 | 0 |
| Count Total | 3 | 0 | 1 | 0 | 4 | Count Total | 0 | 0 | 0 | 0 | 0 | Count Total | 1 | 0 | 0 | 0 | 1 |
| Peak Hour | 0 | 0 | 0 | 0 | 0 | Peak Hour | 0 | 0 | 0 | 0 | 0 | Peak Hour | 1 | 0 | 0 | 0 | 1 |

ALL TRAFFIC DATA SERVICES
(303) 216-2439
www.alltrafficdata.net

**Location:** 1 HWY 99W & 5TH ST PM
**Date:** Tuesday, June 15, 2021
**Peak Hour:** 03:00 PM - 04:00 PM
**Peak 15-Minutes:** 03:45 PM - 04:00 PM

## Peak Hour

### Motorized Vehicles

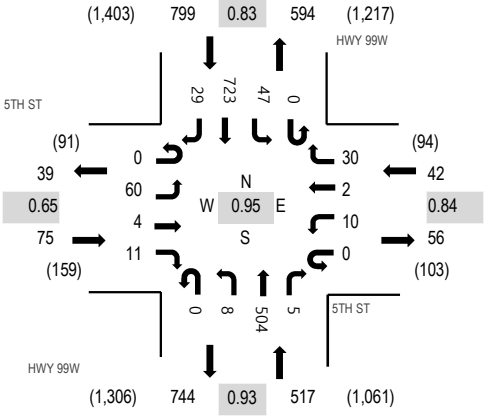


### Heavy Vehicles

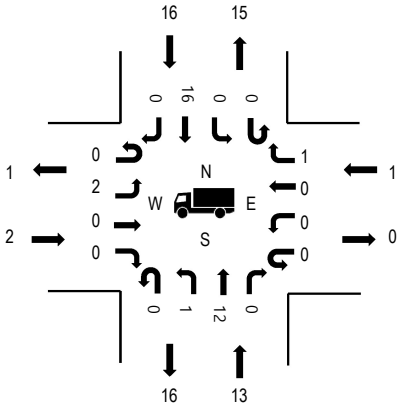


### Pedestrians

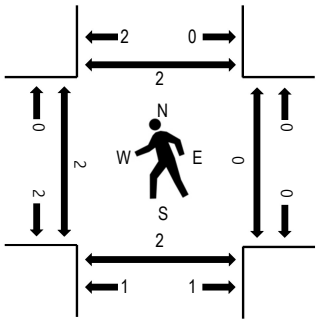


Note: Total study counts contained in parentheses.

| | HV% | PHF |
|---|---|---|
| EB | 2.7% | 0.65 |
| WB | 2.4% | 0.84 |
| NB | 2.5% | 0.93 |
| SB | 2.0% | 0.83 |
| All | 2.2% | 0.95 |

## Traffic Counts - Motorized Vehicles

| Interval Start Time | 5TH ST Eastbound | | | | 5TH ST Westbound | | | | HWY 99W Northbound | | | | HWY 99W Southbound | | | | | Rolling Hour |
|---|---|---|---|---|---|---|---|---|---|---|---|---|---|---|---|---|---|---|
| | U-Turn | Left | Thru | Right | U-Turn | Left | Thru | Right | U-Turn | Left | Thru | Right | U-Turn | Left | Thru | Right | Total | |
| 2:00 PM | 0 | 0 | 1 | 1 | 0 | 2 | 1 | 2 | 0 | 1 | 50 | 0 | 0 | 2 | 32 | 0 | 92 | 1,284 |
| 2:05 PM | 0 | 5 | 0 | 2 | 0 | 3 | 0 | 4 | 0 | 0 | 40 | 0 | 0 | 3 | 71 | 6 | 134 | 1,306 |
| 2:10 PM | 0 | 5 | 0 | 1 | 0 | 0 | 1 | 4 | 0 | 1 | 64 | 1 | 0 | 4 | 56 | 0 | 137 | 1,289 |
| 2:15 PM | 0 | 4 | 1 | 1 | 0 | 0 | 0 | 0 | 0 | 0 | 46 | 2 | 0 | 4 | 54 | 0 | 112 | 1,269 |
| 2:20 PM | 0 | 6 | 0 | 0 | 0 | 0 | 0 | 5 | 0 | 1 | 35 | 0 | 0 | 7 | 35 | 2 | 91 | 1,265 |
| 2:25 PM | 0 | 9 | 0 | 0 | 0 | 0 | 0 | 3 | 0 | 1 | 40 | 1 | 0 | 1 | 31 | 2 | 88 | 1,303 |
| 2:30 PM | 0 | 2 | 1 | 0 | 0 | 1 | 0 | 2 | 0 | 0 | 43 | 1 | 0 | 3 | 36 | 6 | 95 | 1,320 |
| 2:35 PM | 0 | 3 | 0 | 1 | 0 | 0 | 0 | 7 | 0 | 1 | 49 | 1 | 0 | 2 | 41 | 5 | 110 | 1,346 |
| 2:40 PM | 0 | 3 | 0 | 2 | 0 | 0 | 4 | 2 | 0 | 1 | 38 | 1 | 0 | 1 | 52 | 6 | 110 | 1,363 |
| 2:45 PM | 0 | 7 | 0 | 0 | 0 | 0 | 0 | 3 | 0 | 2 | 33 | 0 | 0 | 2 | 53 | 3 | 103 | 1,371 |
| 2:50 PM | 0 | 12 | 3 | 5 | 0 | 1 | 2 | 1 | 0 | 2 | 48 | 1 | 0 | 1 | 34 | 1 | 111 | 1,384 |
| 2:55 PM | 0 | 9 | 0 | 0 | 0 | 1 | 0 | 3 | 0 | 3 | 36 | 1 | 0 | 2 | 46 | 0 | 101 | 1,409 |
| 3:00 PM | 0 | 5 | 0 | 0 | 0 | 1 | 0 | 2 | 0 | 1 | 55 | 2 | 0 | 6 | 39 | 3 | 114 | 1,433 |
| 3:05 PM | 0 | 6 | 0 | 2 | 0 | 2 | 1 | 6 | 0 | 1 | 46 | 0 | 0 | 1 | 51 | 1 | 117 | |
| 3:10 PM | 0 | 5 | 0 | 2 | 0 | 1 | 0 | 1 | 0 | 1 | 42 | 1 | 0 | 7 | 56 | 1 | 117 | |
| 3:15 PM | 0 | 3 | 0 | 1 | 0 | 1 | 0 | 4 | 0 | 0 | 37 | 0 | 0 | 6 | 52 | 4 | 108 | |
| 3:20 PM | 0 | 11 | 0 | 0 | 0 | 2 | 0 | 2 | 0 | 0 | 46 | 0 | 0 | 4 | 62 | 2 | 129 | |
| 3:25 PM | 0 | 4 | 0 | 0 | 0 | 0 | 0 | 2 | 0 | 0 | 28 | 0 | 0 | 2 | 67 | 2 | 105 | |
| 3:30 PM | 0 | 2 | 1 | 1 | 0 | 0 | 0 | 2 | 0 | 0 | 47 | 0 | 0 | 2 | 65 | 1 | 121 | |
| 3:35 PM | 0 | 7 | 2 | 0 | 0 | 1 | 0 | 1 | 0 | 3 | 59 | 0 | 0 | 2 | 50 | 2 | 127 | |
| 3:40 PM | 0 | 3 | 0 | 0 | 0 | 1 | 0 | 3 | 0 | 0 | 39 | 1 | 0 | 5 | 64 | 2 | 118 | |
| 3:45 PM | 0 | 6 | 0 | 2 | 0 | 0 | 0 | 3 | 0 | 1 | 25 | 1 | 0 | 4 | 70 | 4 | 116 | |
| 3:50 PM | 0 | 6 | 0 | 3 | 0 | 1 | 1 | 3 | 0 | 0 | 45 | 0 | 0 | 4 | 70 | 3 | 136 | |
| 3:55 PM | 0 | 2 | 1 | 0 | 0 | 0 | 0 | 1 | 0 | 1 | 35 | 0 | 0 | 4 | 77 | 4 | 125 | |
| Count Total | 0 | 125 | 10 | 24 | 0 | 18 | 10 | 66 | 0 | 21 | 1,026 | 14 | 0 | 79 | 1,264 | 60 | 2,717 | |
| Peak Hour | 0 | 60 | 4 | 11 | 0 | 10 | 2 | 30 | 0 | 8 | 504 | 5 | 0 | 47 | 723 | 29 | 1,433 | |

**Location:** 1 HWY 99W & 5TH ST PM

## Traffic Counts - Heavy Vehicles, Bicycles on Road, and Pedestrians/Bicycles on Crosswalk

| Interval Start Time | Heavy Vehicles | | | | | Interval Start Time | Bicycles on Roadway | | | | | Interval Start Time | Pedestrians/Bicycles on Crosswalk | | | | |
|---|---|---|---|---|---|---|---|---|---|---|---|---|---|---|---|---|---|
| | EB | NB | WB | SB | Total | | EB | NB | WB | SB | Total | | EB | NB | WB | SB | Total |
| 2:00 PM | 0 | 2 | 0 | 0 | 2 | 2:00 PM | 0 | 0 | 0 | 0 | 0 | 2:00 PM | 0 | 0 | 0 | 2 | 2 |
| 2:05 PM | 0 | 0 | 0 | 2 | 2 | 2:05 PM | 0 | 0 | 0 | 0 | 0 | 2:05 PM | 0 | 0 | 0 | 0 | 0 |
| 2:10 PM | 0 | 2 | 0 | 0 | 2 | 2:10 PM | 0 | 0 | 0 | 0 | 0 | 2:10 PM | 0 | 0 | 0 | 0 | 0 |
| 2:15 PM | 0 | 5 | 0 | 2 | 7 | 2:15 PM | 0 | 0 | 0 | 0 | 0 | 2:15 PM | 0 | 0 | 0 | 0 | 0 |
| 2:20 PM | 0 | 0 | 0 | 1 | 1 | 2:20 PM | 0 | 0 | 0 | 0 | 0 | 2:20 PM | 0 | 0 | 0 | 0 | 0 |
| 2:25 PM | 0 | 2 | 0 | 0 | 2 | 2:25 PM | 0 | 0 | 0 | 0 | 0 | 2:25 PM | 0 | 0 | 0 | 0 | 0 |
| 2:30 PM | 0 | 0 | 0 | 2 | 2 | 2:30 PM | 0 | 0 | 0 | 0 | 0 | 2:30 PM | 0 | 0 | 0 | 0 | 0 |
| 2:35 PM | 0 | 1 | 0 | 2 | 3 | 2:35 PM | 0 | 0 | 0 | 0 | 0 | 2:35 PM | 1 | 0 | 0 | 0 | 1 |
| 2:40 PM | 0 | 2 | 4 | 0 | 6 | 2:40 PM | 0 | 0 | 0 | 0 | 0 | 2:40 PM | 0 | 0 | 0 | 0 | 0 |
| 2:45 PM | 0 | 2 | 0 | 2 | 4 | 2:45 PM | 0 | 0 | 0 | 0 | 0 | 2:45 PM | 0 | 0 | 1 | 0 | 1 |
| 2:50 PM | 3 | 2 | 0 | 0 | 5 | 2:50 PM | 0 | 0 | 0 | 0 | 0 | 2:50 PM | 0 | 0 | 0 | 2 | 2 |
| 2:55 PM | 0 | 0 | 0 | 3 | 3 | 2:55 PM | 0 | 1 | 0 | 0 | 1 | 2:55 PM | 1 | 0 | 0 | 1 | 2 |
| 3:00 PM | 0 | 2 | 0 | 2 | 4 | 3:00 PM | 0 | 0 | 0 | 0 | 0 | 3:00 PM | 0 | 1 | 0 | 0 | 1 |
| 3:05 PM | 1 | 1 | 0 | 1 | 3 | 3:05 PM | 0 | 0 | 0 | 0 | 0 | 3:05 PM | 0 | 0 | 0 | 0 | 0 |
| 3:10 PM | 0 | 3 | 1 | 1 | 5 | 3:10 PM | 0 | 0 | 0 | 0 | 0 | 3:10 PM | 0 | 1 | 2 | 0 | 3 |
| 3:15 PM | 0 | 2 | 0 | 2 | 4 | 3:15 PM | 0 | 0 | 0 | 0 | 0 | 3:15 PM | 0 | 0 | 0 | 2 | 2 |
| 3:20 PM | 1 | 1 | 0 | 3 | 5 | 3:20 PM | 0 | 0 | 0 | 0 | 0 | 3:20 PM | 1 | 0 | 0 | 0 | 1 |
| 3:25 PM | 0 | 1 | 0 | 1 | 2 | 3:25 PM | 0 | 0 | 0 | 0 | 0 | 3:25 PM | 0 | 0 | 0 | 1 | 1 |
| 3:30 PM | 0 | 1 | 0 | 0 | 1 | 3:30 PM | 0 | 0 | 0 | 0 | 0 | 3:30 PM | 0 | 1 | 0 | 0 | 1 |
| 3:35 PM | 0 | 0 | 0 | 1 | 1 | 3:35 PM | 0 | 0 | 0 | 0 | 0 | 3:35 PM | 0 | 2 | 0 | 0 | 2 |
| 3:40 PM | 0 | 0 | 0 | 2 | 2 | 3:40 PM | 0 | 0 | 0 | 0 | 0 | 3:40 PM | 0 | 0 | 0 | 0 | 0 |
| 3:45 PM | 0 | 1 | 0 | 2 | 3 | 3:45 PM | 0 | 0 | 0 | 0 | 0 | 3:45 PM | 0 | 0 | 0 | 0 | 0 |
| 3:50 PM | 0 | 0 | 0 | 0 | 0 | 3:50 PM | 0 | 0 | 0 | 0 | 0 | 3:50 PM | 1 | 2 | 0 | 0 | 3 |
| 3:55 PM | 0 | 1 | 0 | 1 | 2 | 3:55 PM | 0 | 0 | 0 | 0 | 0 | 3:55 PM | 0 | 0 | 0 | 0 | 0 |
| Count Total | 5 | 31 | 5 | 30 | 71 | Count Total | 0 | 1 | 0 | 0 | 1 | Count Total | 4 | 7 | 3 | 8 | 22 |
| Peak Hour | 2 | 13 | 1 | 16 | 32 | Peak Hour | 0 | 0 | 0 | 0 | 0 | Peak Hour | 2 | 7 | 2 | 3 | 14 |

**Location:** 2 HWY 99W & 10TH ST PM

ALL TRAFFIC DATA SERVICES
(303) 216-2439
www.alltrafficdata.net

**Location:** 2 HWY 99W & 10TH ST PM
**Date:** Tuesday, June 15, 2021
**Peak Hour:** 03:00 PM - 04:00 PM
**Peak 15-Minutes:** 03:25 PM - 03:40 PM

## Peak Hour

### Motorized Vehicles

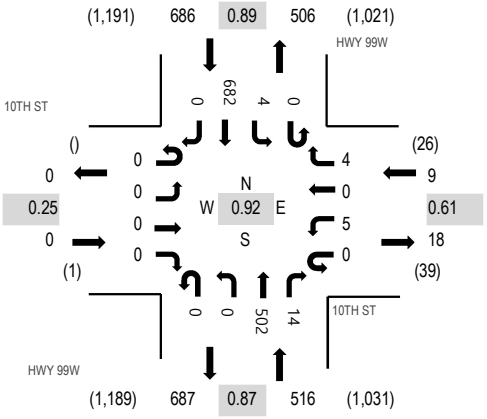


### Heavy Vehicles

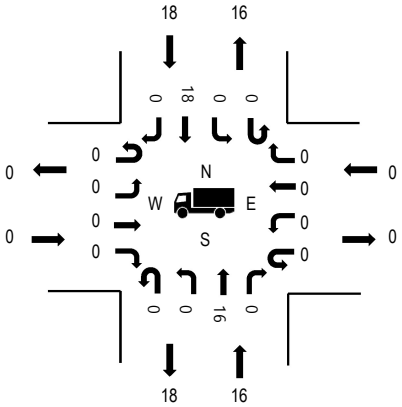


### Pedestrians

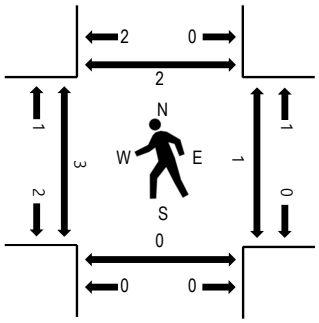


Note: Total study counts contained in parentheses.

| | HV% | PHF |
|---|---|---|
| EB | 0.0% | 0.25 |
| WB | 0.0% | 0.61 |
| NB | 3.1% | 0.87 |
| SB | 2.6% | 0.89 |
| All | 2.8% | 0.92 |

## Traffic Counts - Motorized Vehicles

| Interval Start Time | 10TH ST Eastbound | | | | 10TH ST Westbound | | | | HWY 99W Northbound | | | | HWY 99W Southbound | | | | Total | Rolling Hour |
|---|---|---|---|---|---|---|---|---|---|---|---|---|---|---|---|---|---|---|
| | U-Turn | Left | Thru | Right | U-Turn | Left | Thru | Right | U-Turn | Left | Thru | Right | U-Turn | Left | Thru | Right | | |
| 2:00 PM | 0 | 0 | 0 | 0 | 0 | 0 | 0 | 2 | 0 | 0 | 35 | 1 | 0 | 1 | 37 | 0 | 76 | 1,038 |
| 2:05 PM | 0 | 1 | 0 | 0 | 0 | 0 | 0 | 2 | 0 | 0 | 49 | 1 | 0 | 3 | 60 | 0 | 116 | 1,065 |
| 2:10 PM | 0 | 0 | 0 | 0 | 0 | 3 | 0 | 0 | 0 | 0 | 50 | 2 | 0 | 0 | 37 | 0 | 92 | 1,040 |
| 2:15 PM | 0 | 0 | 0 | 0 | 0 | 1 | 0 | 0 | 0 | 0 | 52 | 1 | 0 | 0 | 41 | 0 | 95 | 1,052 |
| 2:20 PM | 0 | 0 | 0 | 0 | 0 | 2 | 0 | 0 | 0 | 0 | 34 | 1 | 0 | 0 | 39 | 0 | 76 | 1,048 |
| 2:25 PM | 0 | 0 | 0 | 0 | 0 | 1 | 0 | 0 | 0 | 0 | 42 | 0 | 0 | 1 | 35 | 0 | 79 | 1,074 |
| 2:30 PM | 0 | 0 | 0 | 0 | 0 | 0 | 0 | 0 | 0 | 0 | 39 | 3 | 0 | 1 | 36 | 0 | 79 | 1,099 |
| 2:35 PM | 0 | 0 | 0 | 0 | 0 | 0 | 0 | 3 | 0 | 0 | 45 | 1 | 0 | 1 | 45 | 0 | 95 | 1,134 |
| 2:40 PM | 0 | 0 | 0 | 0 | 0 | 0 | 0 | 0 | 0 | 0 | 37 | 1 | 0 | 1 | 42 | 0 | 81 | 1,150 |
| 2:45 PM | 0 | 0 | 0 | 0 | 0 | 0 | 0 | 2 | 0 | 0 | 37 | 0 | 0 | 0 | 48 | 0 | 87 | 1,163 |
| 2:50 PM | 0 | 0 | 0 | 0 | 0 | 0 | 0 | 0 | 0 | 0 | 45 | 0 | 0 | 0 | 35 | 0 | 80 | 1,178 |
| 2:55 PM | 0 | 0 | 0 | 0 | 0 | 0 | 0 | 1 | 0 | 0 | 39 | 0 | 0 | 2 | 40 | 0 | 82 | 1,206 |
| 3:00 PM | 0 | 0 | 0 | 0 | 0 | 0 | 0 | 1 | 0 | 0 | 61 | 0 | 0 | 0 | 41 | 0 | 103 | 1,211 |
| 3:05 PM | 0 | 0 | 0 | 0 | 0 | 0 | 0 | 0 | 0 | 0 | 40 | 0 | 0 | 0 | 51 | 0 | 91 | |
| 3:10 PM | 0 | 0 | 0 | 0 | 0 | 1 | 0 | 1 | 0 | 0 | 41 | 2 | 0 | 0 | 59 | 0 | 104 | |
| 3:15 PM | 0 | 0 | 0 | 0 | 0 | 0 | 0 | 1 | 0 | 0 | 40 | 0 | 0 | 0 | 50 | 0 | 91 | |
| 3:20 PM | 0 | 0 | 0 | 0 | 0 | 1 | 0 | 0 | 0 | 0 | 47 | 1 | 0 | 1 | 52 | 0 | 102 | |
| 3:25 PM | 0 | 0 | 0 | 0 | 0 | 0 | 0 | 1 | 0 | 0 | 34 | 1 | 0 | 1 | 67 | 0 | 104 | |
| 3:30 PM | 0 | 0 | 0 | 0 | 0 | 0 | 0 | 0 | 0 | 0 | 42 | 1 | 0 | 0 | 71 | 0 | 114 | |
| 3:35 PM | 0 | 0 | 0 | 0 | 0 | 0 | 0 | 0 | 0 | 0 | 58 | 0 | 0 | 0 | 53 | 0 | 111 | |
| 3:40 PM | 0 | 0 | 0 | 0 | 0 | 1 | 0 | 0 | 0 | 0 | 34 | 4 | 0 | 0 | 55 | 0 | 94 | |
| 3:45 PM | 0 | 0 | 0 | 0 | 0 | 0 | 0 | 0 | 0 | 0 | 32 | 3 | 0 | 0 | 67 | 0 | 102 | |
| 3:50 PM | 0 | 0 | 0 | 0 | 0 | 2 | 0 | 0 | 0 | 0 | 45 | 0 | 0 | 0 | 61 | 0 | 108 | |
| 3:55 PM | 0 | 0 | 0 | 0 | 0 | 0 | 0 | 0 | 0 | 0 | 28 | 2 | 0 | 2 | 55 | 0 | 87 | |
| Count Total | 0 | 1 | 0 | 0 | 0 | 12 | 0 | 14 | 0 | 0 | 1,006 | 25 | 0 | 14 | 1,177 | 0 | 2,249 | |
| Peak Hour | 0 | 0 | 0 | 0 | 0 | 5 | 0 | 4 | 0 | 0 | 502 | 14 | 0 | 4 | 682 | 0 | 1,211 | |

**Location:** 2 HWY 99W & 10TH ST PM

## Traffic Counts - Heavy Vehicles, Bicycles on Road, and Pedestrians/Bicycles on Crosswalk

| Interval Start Time | Heavy Vehicles | | | | | Interval Start Time | Bicycles on Roadway | | | | | Interval Start Time | Pedestrians/Bicycles on Crosswalk | | | | |
|---|---|---|---|---|---|---|---|---|---|---|---|---|---|---|---|---|---|
| | EB | NB | WB | SB | Total | | EB | NB | WB | SB | Total | | EB | NB | WB | SB | Total |
| 2:00 PM | 0 | 0 | 0 | 0 | 0 | 2:00 PM | 0 | 0 | 0 | 0 | 0 | 2:00 PM | 0 | 0 | 0 | 0 | 0 |
| 2:05 PM | 0 | 1 | 0 | 2 | 3 | 2:05 PM | 0 | 0 | 0 | 0 | 0 | 2:05 PM | 0 | 0 | 0 | 0 | 0 |
| 2:10 PM | 0 | 3 | 0 | 0 | 3 | 2:10 PM | 0 | 0 | 0 | 0 | 0 | 2:10 PM | 0 | 0 | 0 | 0 | 0 |
| 2:15 PM | 0 | 4 | 0 | 1 | 5 | 2:15 PM | 0 | 0 | 0 | 0 | 0 | 2:15 PM | 0 | 0 | 0 | 0 | 0 |
| 2:20 PM | 0 | 2 | 0 | 1 | 3 | 2:20 PM | 0 | 0 | 0 | 0 | 0 | 2:20 PM | 3 | 0 | 0 | 3 | 6 |
| 2:25 PM | 0 | 1 | 0 | 0 | 1 | 2:25 PM | 0 | 0 | 0 | 0 | 0 | 2:25 PM | 0 | 0 | 0 | 0 | 0 |
| 2:30 PM | 0 | 1 | 0 | 2 | 3 | 2:30 PM | 0 | 0 | 0 | 0 | 0 | 2:30 PM | 0 | 0 | 0 | 0 | 0 |
| 2:35 PM | 0 | 0 | 0 | 0 | 0 | 2:35 PM | 0 | 0 | 0 | 0 | 0 | 2:35 PM | 1 | 0 | 0 | 0 | 1 |
| 2:40 PM | 0 | 2 | 0 | 1 | 3 | 2:40 PM | 0 | 0 | 0 | 0 | 0 | 2:40 PM | 0 | 0 | 0 | 0 | 0 |
| 2:45 PM | 0 | 2 | 0 | 2 | 4 | 2:45 PM | 0 | 0 | 0 | 0 | 0 | 2:45 PM | 0 | 0 | 0 | 0 | 0 |
| 2:50 PM | 0 | 0 | 0 | 1 | 1 | 2:50 PM | 0 | 0 | 0 | 0 | 0 | 2:50 PM | 1 | 0 | 0 | 0 | 1 |
| 2:55 PM | 0 | 0 | 0 | 2 | 2 | 2:55 PM | 0 | 0 | 0 | 0 | 0 | 2:55 PM | 0 | 4 | 4 | 0 | 8 |
| 3:00 PM | 0 | 1 | 0 | 2 | 3 | 3:00 PM | 0 | 0 | 0 | 0 | 0 | 3:00 PM | 0 | 0 | 0 | 0 | 0 |
| 3:05 PM | 0 | 1 | 0 | 2 | 3 | 3:05 PM | 0 | 0 | 0 | 0 | 0 | 3:05 PM | 0 | 0 | 0 | 0 | 0 |
| 3:10 PM | 0 | 4 | 0 | 0 | 4 | 3:10 PM | 0 | 0 | 0 | 0 | 0 | 3:10 PM | 0 | 0 | 0 | 0 | 0 |
| 3:15 PM | 0 | 1 | 0 | 2 | 3 | 3:15 PM | 0 | 0 | 0 | 0 | 0 | 3:15 PM | 0 | 0 | 0 | 0 | 0 |
| 3:20 PM | 0 | 2 | 0 | 4 | 6 | 3:20 PM | 0 | 0 | 0 | 0 | 0 | 3:20 PM | 0 | 0 | 0 | 0 | 0 |
| 3:25 PM | 0 | 2 | 0 | 1 | 3 | 3:25 PM | 0 | 0 | 0 | 0 | 0 | 3:25 PM | 0 | 0 | 0 | 1 | 1 |
| 3:30 PM | 0 | 1 | 0 | 0 | 1 | 3:30 PM | 0 | 0 | 0 | 0 | 0 | 3:30 PM | 0 | 0 | 0 | 0 | 0 |
| 3:35 PM | 0 | 1 | 0 | 2 | 3 | 3:35 PM | 0 | 0 | 0 | 0 | 0 | 3:35 PM | 0 | 0 | 0 | 0 | 0 |
| 3:40 PM | 0 | 0 | 0 | 0 | 0 | 3:40 PM | 0 | 0 | 0 | 0 | 0 | 3:40 PM | 0 | 0 | 0 | 1 | 1 |
| 3:45 PM | 0 | 1 | 0 | 4 | 5 | 3:45 PM | 0 | 0 | 0 | 0 | 0 | 3:45 PM | 0 | 0 | 1 | 0 | 1 |
| 3:50 PM | 0 | 0 | 0 | 1 | 1 | 3:50 PM | 0 | 0 | 0 | 0 | 0 | 3:50 PM | 1 | 0 | 0 | 0 | 1 |
| 3:55 PM | 0 | 2 | 0 | 0 | 2 | 3:55 PM | 0 | 0 | 0 | 0 | 0 | 3:55 PM | 2 | 0 | 0 | 0 | 2 |
| Count Total | 0 | 32 | 0 | 30 | 62 | Count Total | 0 | 0 | 0 | 0 | 0 | Count Total | 8 | 4 | 5 | 5 | 22 |
| Peak Hour | 0 | 16 | 0 | 18 | 34 | Peak Hour | 0 | 0 | 0 | 0 | 0 | Peak Hour | 3 | 0 | 1 | 2 | 6 |

**Location:** 3 HWY 99W & PARKS DR PM

ALL TRAFFIC DATA SERVICES
(303) 216-2439
www.alltrafficdata.net

**Location:** 3 HWY 99W & PARKS DR PM
**Date:** Tuesday, June 15, 2021
**Peak Hour:** 02:55 PM - 03:55 PM
**Peak 15-Minutes:** 03:40 PM - 03:55 PM

## Peak Hour

### Motorized Vehicles

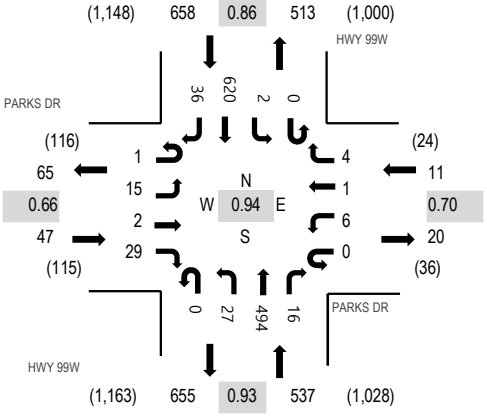


### Heavy Vehicles

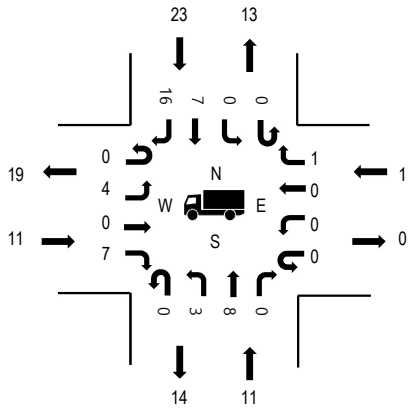


### Pedestrians

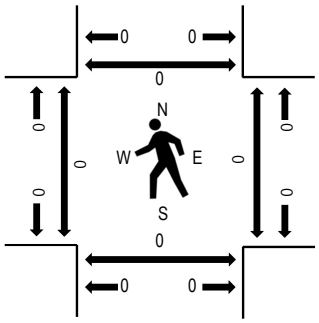


Note: Total study counts contained in parentheses.

| | HV% | PHF |
|---|---|---|
| EB | 23.4% | 0.66 |
| WB | 9.1% | 0.70 |
| NB | 2.0% | 0.93 |
| SB | 3.5% | 0.86 |
| All | 3.7% | 0.94 |

## Traffic Counts - Motorized Vehicles

| Interval Start Time | PARKS DR Eastbound | | | | PARKS DR Westbound | | | | HWY 99W Northbound | | | | HWY 99W Southbound | | | | Total | Rolling Hour |
|---|---|---|---|---|---|---|---|---|---|---|---|---|---|---|---|---|---|---|
| | U-Turn | Left | Thru | Right | U-Turn | Left | Thru | Right | U-Turn | Left | Thru | Right | U-Turn | Left | Thru | Right | | |
| 2:00 PM | 0 | 2 | 0 | 3 | 0 | 1 | 0 | 1 | 0 | 4 | 29 | 0 | 0 | 0 | 37 | 1 | 78 | 1,071 |
| 2:05 PM | 0 | 4 | 0 | 1 | 0 | 1 | 0 | 0 | 0 | 1 | 43 | 2 | 0 | 0 | 39 | 4 | 95 | 1,080 |
| 2:10 PM | 0 | 2 | 0 | 3 | 0 | 2 | 0 | 0 | 0 | 4 | 51 | 0 | 0 | 0 | 49 | 0 | 111 | 1,089 |
| 2:15 PM | 0 | 2 | 0 | 4 | 0 | 1 | 0 | 1 | 0 | 3 | 46 | 1 | 0 | 0 | 37 | 3 | 98 | 1,082 |
| 2:20 PM | 0 | 2 | 0 | 5 | 0 | 0 | 0 | 0 | 0 | 0 | 39 | 0 | 0 | 0 | 41 | 3 | 90 | 1,075 |
| 2:25 PM | 0 | 1 | 1 | 7 | 0 | 0 | 0 | 1 | 0 | 2 | 29 | 1 | 0 | 0 | 31 | 1 | 74 | 1,111 |
| 2:30 PM | 0 | 3 | 0 | 5 | 0 | 2 | 0 | 0 | 0 | 3 | 41 | 1 | 0 | 0 | 31 | 3 | 89 | 1,133 |
| 2:35 PM | 0 | 2 | 0 | 3 | 0 | 0 | 0 | 1 | 0 | 2 | 40 | 1 | 0 | 1 | 42 | 1 | 93 | 1,155 |
| 2:40 PM | 0 | 4 | 0 | 2 | 0 | 0 | 0 | 1 | 0 | 2 | 34 | 2 | 0 | 0 | 35 | 3 | 83 | 1,172 |
| 2:45 PM | 0 | 2 | 0 | 1 | 0 | 0 | 0 | 0 | 0 | 1 | 33 | 3 | 0 | 0 | 42 | 3 | 85 | 1,194 |
| 2:50 PM | 0 | 1 | 0 | 1 | 0 | 0 | 0 | 0 | 0 | 2 | 45 | 0 | 0 | 0 | 36 | 0 | 85 | 1,219 |
| 2:55 PM | 0 | 0 | 0 | 2 | 0 | 0 | 1 | 1 | 0 | 1 | 39 | 1 | 0 | 0 | 41 | 4 | 90 | 1,253 |
| 3:00 PM | 1 | 0 | 1 | 0 | 0 | 1 | 0 | 0 | 0 | 3 | 51 | 0 | 0 | 0 | 29 | 1 | 87 | 1,244 |
| 3:05 PM | 0 | 1 | 0 | 2 | 0 | 1 | 0 | 0 | 0 | 2 | 40 | 1 | 0 | 0 | 55 | 2 | 104 | |
| 3:10 PM | 0 | 3 | 0 | 4 | 0 | 1 | 0 | 0 | 0 | 2 | 38 | 0 | 0 | 0 | 55 | 1 | 104 | |
| 3:15 PM | 0 | 2 | 0 | 2 | 0 | 1 | 0 | 0 | 0 | 1 | 36 | 4 | 0 | 0 | 43 | 2 | 91 | |
| 3:20 PM | 0 | 4 | 0 | 6 | 0 | 0 | 0 | 0 | 0 | 3 | 47 | 0 | 0 | 0 | 59 | 7 | 126 | |
| 3:25 PM | 0 | 1 | 0 | 2 | 0 | 0 | 0 | 0 | 0 | 3 | 31 | 0 | 0 | 1 | 56 | 2 | 96 | |
| 3:30 PM | 0 | 1 | 0 | 1 | 0 | 1 | 0 | 0 | 0 | 0 | 47 | 1 | 0 | 1 | 57 | 2 | 111 | |
| 3:35 PM | 0 | 0 | 0 | 0 | 0 | 1 | 0 | 0 | 0 | 3 | 57 | 1 | 0 | 0 | 47 | 1 | 110 | |
| 3:40 PM | 0 | 1 | 1 | 2 | 0 | 0 | 0 | 1 | 0 | 2 | 30 | 3 | 0 | 0 | 62 | 3 | 105 | |
| 3:45 PM | 0 | 1 | 0 | 2 | 0 | 0 | 0 | 0 | 0 | 5 | 34 | 3 | 0 | 0 | 57 | 8 | 110 | |
| 3:50 PM | 0 | 1 | 0 | 6 | 0 | 0 | 0 | 2 | 0 | 2 | 44 | 2 | 0 | 0 | 59 | 3 | 119 | |
| 3:55 PM | 0 | 2 | 0 | 5 | 0 | 0 | 0 | 1 | 0 | 1 | 24 | 1 | 0 | 2 | 41 | 4 | 81 | |
| Count Total | 1 | 42 | 3 | 69 | 0 | 13 | 1 | 10 | 0 | 52 | 948 | 28 | 0 | 5 | 1,081 | 62 | 2,315 | |
| Peak Hour | 1 | 15 | 2 | 29 | 0 | 6 | 1 | 4 | 0 | 27 | 494 | 16 | 0 | 2 | 620 | 36 | 1,253 | |

**Location:** 3 HWY 99W & PARKS DR PM

## Traffic Counts - Heavy Vehicles, Bicycles on Road, and Pedestrians/Bicycles on Crosswalk

| Interval Start Time | Heavy Vehicles | | | | | Interval Start Time | Bicycles on Roadway | | | | | Interval Start Time | Pedestrians/Bicycles on Crosswalk | | | | |
|---|---|---|---|---|---|---|---|---|---|---|---|---|---|---|---|---|---|
| | EB | NB | WB | SB | Total | | EB | NB | WB | SB | Total | | EB | NB | WB | SB | Total |
| 2:00 PM | 0 | 0 | 0 | 0 | 0 | 2:00 PM | 0 | 0 | 0 | 0 | 0 | 2:00 PM | 0 | 0 | 0 | 0 | 0 |
| 2:05 PM | 1 | 2 | 0 | 2 | 5 | 2:05 PM | 0 | 0 | 0 | 0 | 0 | 2:05 PM | 0 | 0 | 0 | 0 | 0 |
| 2:10 PM | 1 | 3 | 0 | 0 | 4 | 2:10 PM | 0 | 0 | 0 | 0 | 0 | 2:10 PM | 0 | 0 | 0 | 0 | 0 |
| 2:15 PM | 3 | 2 | 0 | 2 | 7 | 2:15 PM | 0 | 0 | 0 | 0 | 0 | 2:15 PM | 0 | 0 | 0 | 0 | 0 |
| 2:20 PM | 2 | 1 | 0 | 2 | 5 | 2:20 PM | 0 | 0 | 0 | 0 | 0 | 2:20 PM | 0 | 0 | 0 | 0 | 0 |
| 2:25 PM | 2 | 1 | 0 | 0 | 3 | 2:25 PM | 0 | 0 | 0 | 0 | 0 | 2:25 PM | 0 | 0 | 0 | 0 | 0 |
| 2:30 PM | 1 | 2 | 0 | 2 | 5 | 2:30 PM | 0 | 0 | 0 | 0 | 0 | 2:30 PM | 0 | 0 | 0 | 0 | 0 |
| 2:35 PM | 0 | 1 | 0 | 0 | 1 | 2:35 PM | 0 | 0 | 0 | 0 | 0 | 2:35 PM | 0 | 0 | 0 | 0 | 0 |
| 2:40 PM | 2 | 1 | 0 | 1 | 4 | 2:40 PM | 0 | 1 | 0 | 0 | 1 | 2:40 PM | 0 | 0 | 0 | 0 | 0 |
| 2:45 PM | 2 | 1 | 0 | 2 | 5 | 2:45 PM | 0 | 0 | 0 | 0 | 0 | 2:45 PM | 0 | 0 | 0 | 0 | 0 |
| 2:50 PM | 0 | 1 | 0 | 1 | 2 | 2:50 PM | 0 | 0 | 0 | 0 | 0 | 2:50 PM | 0 | 0 | 0 | 0 | 0 |
| 2:55 PM | 1 | 0 | 1 | 3 | 5 | 2:55 PM | 0 | 0 | 0 | 0 | 0 | 2:55 PM | 0 | 0 | 0 | 0 | 0 |
| 3:00 PM | 0 | 1 | 0 | 2 | 3 | 3:00 PM | 0 | 0 | 0 | 0 | 0 | 3:00 PM | 0 | 0 | 0 | 0 | 0 |
| 3:05 PM | 0 | 3 | 0 | 2 | 5 | 3:05 PM | 0 | 0 | 0 | 0 | 0 | 3:05 PM | 0 | 0 | 0 | 0 | 0 |
| 3:10 PM | 3 | 2 | 0 | 0 | 5 | 3:10 PM | 0 | 0 | 0 | 0 | 0 | 3:10 PM | 0 | 0 | 0 | 0 | 0 |
| 3:15 PM | 1 | 1 | 0 | 1 | 3 | 3:15 PM | 0 | 0 | 0 | 0 | 0 | 3:15 PM | 0 | 0 | 0 | 0 | 0 |
| 3:20 PM | 3 | 1 | 0 | 6 | 10 | 3:20 PM | 0 | 0 | 0 | 0 | 0 | 3:20 PM | 0 | 0 | 0 | 0 | 0 |
| 3:25 PM | 1 | 1 | 0 | 1 | 3 | 3:25 PM | 0 | 0 | 0 | 0 | 0 | 3:25 PM | 0 | 0 | 0 | 0 | 0 |
| 3:30 PM | 0 | 0 | 0 | 0 | 0 | 3:30 PM | 0 | 0 | 0 | 0 | 0 | 3:30 PM | 0 | 0 | 0 | 0 | 0 |
| 3:35 PM | 0 | 1 | 0 | 1 | 2 | 3:35 PM | 0 | 0 | 0 | 0 | 0 | 3:35 PM | 0 | 0 | 0 | 0 | 0 |
| 3:40 PM | 0 | 0 | 0 | 1 | 1 | 3:40 PM | 0 | 0 | 0 | 0 | 0 | 3:40 PM | 0 | 0 | 0 | 0 | 0 |
| 3:45 PM | 0 | 1 | 0 | 4 | 5 | 3:45 PM | 0 | 0 | 0 | 0 | 0 | 3:45 PM | 0 | 0 | 0 | 0 | 0 |
| 3:50 PM | 2 | 0 | 0 | 2 | 4 | 3:50 PM | 0 | 0 | 0 | 0 | 0 | 3:50 PM | 0 | 0 | 0 | 0 | 0 |
| 3:55 PM | 1 | 2 | 0 | 0 | 3 | 3:55 PM | 0 | 0 | 0 | 0 | 0 | 3:55 PM | 0 | 0 | 0 | 0 | 0 |
| Count Total | 26 | 28 | 1 | 35 | 90 | Count Total | 0 | 1 | 0 | 0 | 1 | Count Total | 0 | 0 | 0 | 0 | 0 |
| Peak Hour | 11 | 11 | 1 | 23 | 46 | Peak Hour | 0 | 0 | 0 | 0 | 0 | Peak Hour | 0 | 0 | 0 | 0 | 0 |

ALL TRAFFIC DATA SERVICES
(303) 216-2439
www.alltrafficdata.net

**Location:** 4 SE EDWARDS DR & SE 8TH ST PM
**Date:** Tuesday, June 15, 2021
**Peak Hour:** 02:05 PM - 03:05 PM
**Peak 15-Minutes:** 02:05 PM - 02:20 PM

## Peak Hour

### Motorized Vehicles

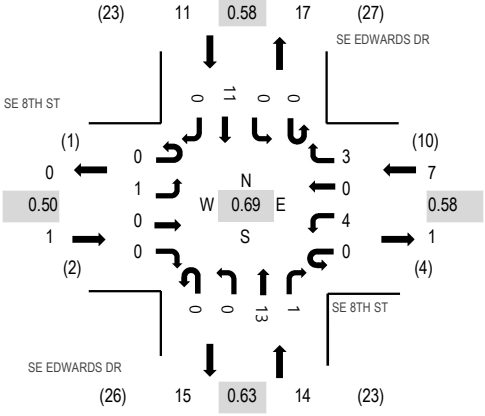


### Heavy Vehicles

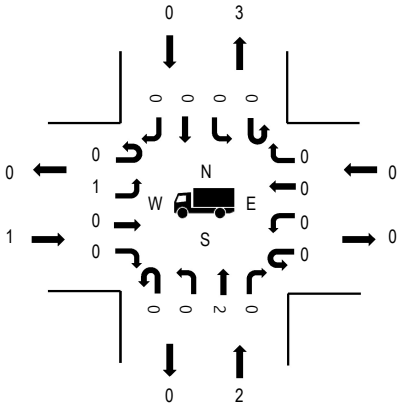


### Pedestrians

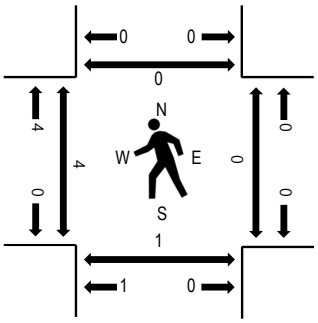


Note: Total study counts contained in parentheses.

| | HV% | PHF |
|---|---|---|
| EB | 100.0% | 0.50 |
| WB | 0.0% | 0.58 |
| NB | 14.3% | 0.63 |
| SB | 0.0% | 0.58 |
| All | 9.1% | 0.69 |

## Traffic Counts - Motorized Vehicles

| Interval Start Time | SE 8TH ST Eastbound | | | | SE 8TH ST Westbound | | | | SE EDWARDS DR Northbound | | | | SE EDWARDS DR Southbound | | | | Total | Rolling Hour |
|---|---|---|---|---|---|---|---|---|---|---|---|---|---|---|---|---|---|---|
| | U-Turn | Left | Thru | Right | U-Turn | Left | Thru | Right | U-Turn | Left | Thru | Right | U-Turn | Left | Thru | Right | | |
| 2:00 PM | 0 | 0 | 0 | 0 | 0 | 0 | 0 | 0 | 0 | 0 | 2 | 0 | 0 | 0 | 0 | 0 | 2 | 31 |
| 2:05 PM | 0 | 0 | 0 | 0 | 0 | 1 | 0 | 0 | 0 | 0 | 3 | 0 | 0 | 0 | 1 | 0 | 5 | 33 |
| 2:10 PM | 0 | 0 | 0 | 0 | 0 | 0 | 0 | 1 | 0 | 0 | 0 | 1 | 0 | 0 | 3 | 0 | 5 | 28 |
| 2:15 PM | 0 | 0 | 0 | 0 | 0 | 1 | 0 | 0 | 0 | 0 | 0 | 0 | 0 | 0 | 1 | 0 | 2 | 23 |
| 2:20 PM | 0 | 0 | 0 | 0 | 0 | 0 | 0 | 0 | 0 | 0 | 1 | 0 | 0 | 0 | 0 | 0 | 1 | 24 |
| 2:25 PM | 0 | 0 | 0 | 0 | 0 | 0 | 0 | 1 | 0 | 0 | 1 | 0 | 0 | 0 | 1 | 0 | 3 | 24 |
| 2:30 PM | 0 | 0 | 0 | 0 | 0 | 0 | 0 | 0 | 0 | 0 | 1 | 0 | 0 | 0 | 0 | 0 | 1 | 23 |
| 2:35 PM | 0 | 0 | 0 | 0 | 0 | 0 | 0 | 0 | 0 | 0 | 2 | 0 | 0 | 0 | 1 | 0 | 3 | 23 |
| 2:40 PM | 0 | 1 | 0 | 0 | 0 | 0 | 0 | 1 | 0 | 0 | 2 | 0 | 0 | 0 | 0 | 0 | 4 | 22 |
| 2:45 PM | 0 | 0 | 0 | 0 | 0 | 0 | 0 | 0 | 0 | 0 | 1 | 0 | 0 | 0 | 1 | 0 | 2 | 24 |
| 2:50 PM | 0 | 0 | 0 | 0 | 0 | 0 | 0 | 0 | 0 | 0 | 0 | 0 | 0 | 0 | 2 | 0 | 2 | 24 |
| 2:55 PM | 0 | 0 | 0 | 0 | 0 | 0 | 0 | 0 | 0 | 0 | 1 | 0 | 0 | 0 | 0 | 0 | 1 | 24 |
| 3:00 PM | 0 | 0 | 0 | 0 | 0 | 2 | 0 | 0 | 0 | 0 | 1 | 0 | 0 | 0 | 1 | 0 | 4 | 27 |
| 3:05 PM | 0 | 0 | 0 | 0 | 0 | 0 | 0 | 0 | 0 | 0 | 0 | 0 | 0 | 0 | 0 | 0 | 0 | |
| 3:10 PM | 0 | 0 | 0 | 0 | 0 | 0 | 0 | 0 | 0 | 0 | 0 | 0 | 0 | 0 | 0 | 0 | 0 | |
| 3:15 PM | 0 | 0 | 0 | 0 | 0 | 1 | 0 | 0 | 0 | 0 | 0 | 0 | 0 | 1 | 1 | 0 | 3 | |
| 3:20 PM | 0 | 0 | 0 | 0 | 0 | 0 | 0 | 0 | 0 | 0 | 0 | 0 | 0 | 0 | 1 | 0 | 1 | |
| 3:25 PM | 0 | 1 | 0 | 0 | 0 | 0 | 0 | 0 | 0 | 0 | 0 | 0 | 0 | 0 | 1 | 0 | 2 | |
| 3:30 PM | 0 | 0 | 0 | 0 | 0 | 0 | 0 | 0 | 0 | 0 | 0 | 0 | 0 | 0 | 0 | 1 | 1 | |
| 3:35 PM | 0 | 0 | 0 | 0 | 0 | 0 | 0 | 0 | 0 | 0 | 0 | 0 | 0 | 0 | 2 | 0 | 2 | |
| 3:40 PM | 0 | 0 | 0 | 0 | 0 | 0 | 0 | 1 | 0 | 0 | 1 | 1 | 0 | 0 | 3 | 0 | 6 | |
| 3:45 PM | 0 | 0 | 0 | 0 | 0 | 0 | 0 | 0 | 0 | 0 | 2 | 0 | 0 | 0 | 0 | 0 | 2 | |
| 3:50 PM | 0 | 0 | 0 | 0 | 0 | 1 | 0 | 0 | 0 | 0 | 1 | 0 | 0 | 0 | 0 | 0 | 2 | |
| 3:55 PM | 0 | 0 | 0 | 0 | 0 | 0 | 0 | 0 | 0 | 0 | 2 | 0 | 0 | 1 | 1 | 0 | 4 | |
| Count Total | 0 | 2 | 0 | 0 | 0 | 6 | 0 | 4 | 0 | 0 | 21 | 2 | 0 | 2 | 20 | 1 | 58 | |
| Peak Hour | 0 | 1 | 0 | 0 | 0 | 4 | 0 | 3 | 0 | 0 | 13 | 1 | 0 | 0 | 11 | 0 | 33 | |

**Location:** 4 SE EDWARDS DR & SE 8TH ST PM

## Traffic Counts - Heavy Vehicles, Bicycles on Road, and Pedestrians/Bicycles on Crosswalk

| Interval Start Time | Heavy Vehicles | | | | | Interval Start Time | Bicycles on Roadway | | | | | Interval Start Time | Pedestrians/Bicycles on Crosswalk | | | | |
|---|---|---|---|---|---|---|---|---|---|---|---|---|---|---|---|---|---|
| | EB | NB | WB | SB | Total | | EB | NB | WB | SB | Total | | EB | NB | WB | SB | Total |
| 2:00 PM | 0 | 1 | 0 | 0 | 1 | 2:00 PM | 0 | 0 | 0 | 0 | 0 | 2:00 PM | 0 | 0 | 0 | 0 | 0 |
| 2:05 PM | 0 | 0 | 0 | 0 | 0 | 2:05 PM | 0 | 0 | 0 | 0 | 0 | 2:05 PM | 0 | 0 | 0 | 0 | 0 |
| 2:10 PM | 0 | 0 | 0 | 0 | 0 | 2:10 PM | 0 | 0 | 0 | 0 | 0 | 2:10 PM | 0 | 0 | 0 | 0 | 0 |
| 2:15 PM | 0 | 0 | 0 | 0 | 0 | 2:15 PM | 0 | 0 | 0 | 0 | 0 | 2:15 PM | 0 | 0 | 0 | 0 | 0 |
| 2:20 PM | 0 | 0 | 0 | 0 | 0 | 2:20 PM | 0 | 0 | 0 | 0 | 0 | 2:20 PM | 0 | 0 | 0 | 0 | 0 |
| 2:25 PM | 0 | 0 | 0 | 0 | 0 | 2:25 PM | 0 | 0 | 0 | 0 | 0 | 2:25 PM | 0 | 0 | 0 | 0 | 0 |
| 2:30 PM | 0 | 0 | 0 | 0 | 0 | 2:30 PM | 0 | 0 | 0 | 0 | 0 | 2:30 PM | 0 | 0 | 0 | 0 | 0 |
| 2:35 PM | 0 | 2 | 0 | 0 | 2 | 2:35 PM | 0 | 0 | 0 | 0 | 0 | 2:35 PM | 0 | 0 | 0 | 0 | 0 |
| 2:40 PM | 1 | 0 | 0 | 0 | 1 | 2:40 PM | 0 | 0 | 0 | 0 | 0 | 2:40 PM | 0 | 0 | 0 | 0 | 0 |
| 2:45 PM | 0 | 0 | 0 | 0 | 0 | 2:45 PM | 0 | 0 | 0 | 0 | 0 | 2:45 PM | 0 | 1 | 0 | 0 | 1 |
| 2:50 PM | 0 | 0 | 0 | 0 | 0 | 2:50 PM | 0 | 0 | 0 | 0 | 0 | 2:50 PM | 0 | 0 | 0 | 0 | 0 |
| 2:55 PM | 0 | 0 | 0 | 0 | 0 | 2:55 PM | 0 | 0 | 0 | 0 | 0 | 2:55 PM | 4 | 0 | 0 | 0 | 4 |
| 3:00 PM | 0 | 0 | 0 | 0 | 0 | 3:00 PM | 0 | 0 | 0 | 0 | 0 | 3:00 PM | 0 | 0 | 0 | 0 | 0 |
| 3:05 PM | 0 | 0 | 0 | 0 | 0 | 3:05 PM | 0 | 0 | 0 | 0 | 0 | 3:05 PM | 0 | 0 | 0 | 0 | 0 |
| 3:10 PM | 0 | 0 | 0 | 0 | 0 | 3:10 PM | 0 | 0 | 0 | 0 | 0 | 3:10 PM | 0 | 0 | 0 | 0 | 0 |
| 3:15 PM | 0 | 0 | 0 | 0 | 0 | 3:15 PM | 0 | 0 | 0 | 0 | 0 | 3:15 PM | 0 | 0 | 0 | 0 | 0 |
| 3:20 PM | 0 | 0 | 0 | 0 | 0 | 3:20 PM | 0 | 0 | 0 | 0 | 0 | 3:20 PM | 0 | 0 | 0 | 1 | 1 |
| 3:25 PM | 0 | 0 | 0 | 0 | 0 | 3:25 PM | 0 | 0 | 0 | 0 | 0 | 3:25 PM | 0 | 0 | 0 | 0 | 0 |
| 3:30 PM | 0 | 0 | 0 | 0 | 0 | 3:30 PM | 0 | 0 | 0 | 0 | 0 | 3:30 PM | 0 | 0 | 0 | 0 | 0 |
| 3:35 PM | 0 | 0 | 0 | 0 | 0 | 3:35 PM | 0 | 0 | 0 | 0 | 0 | 3:35 PM | 1 | 0 | 0 | 0 | 1 |
| 3:40 PM | 0 | 0 | 0 | 0 | 0 | 3:40 PM | 0 | 0 | 0 | 0 | 0 | 3:40 PM | 0 | 0 | 0 | 0 | 0 |
| 3:45 PM | 0 | 0 | 0 | 0 | 0 | 3:45 PM | 0 | 0 | 0 | 0 | 0 | 3:45 PM | 0 | 0 | 0 | 0 | 0 |
| 3:50 PM | 0 | 0 | 0 | 0 | 0 | 3:50 PM | 0 | 0 | 0 | 0 | 0 | 3:50 PM | 0 | 0 | 0 | 0 | 0 |
| 3:55 PM | 0 | 0 | 0 | 0 | 0 | 3:55 PM | 0 | 0 | 0 | 0 | 0 | 3:55 PM | 0 | 0 | 0 | 1 | 1 |
| Count Total | 1 | 3 | 0 | 0 | 4 | Count Total | 0 | 0 | 0 | 0 | 0 | Count Total | 5 | 1 | 0 | 2 | 8 |
| Peak Hour | 1 | 2 | 0 | 0 | 3 | Peak Hour | 0 | 0 | 0 | 0 | 0 | Peak Hour | 4 | 1 | 0 | 0 | 5 |

ALL TRAFFIC DATA SERVICES
(303) 216-2439
www.alltrafficdata.net

**Location:** 5 SE EDWARDS DR & SE 5TH ST PM
**Date:** Tuesday, June 15, 2021
**Peak Hour:** 02:20 PM - 03:20 PM
**Peak 15-Minutes:** 02:25 PM - 02:40 PM

## Peak Hour

### Motorized Vehicles

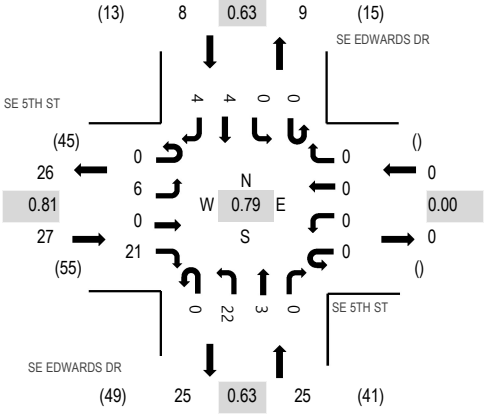


### Heavy Vehicles

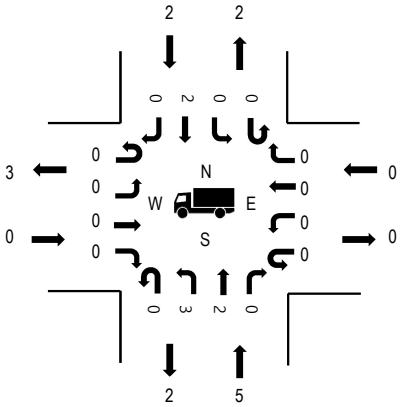


### Pedestrians

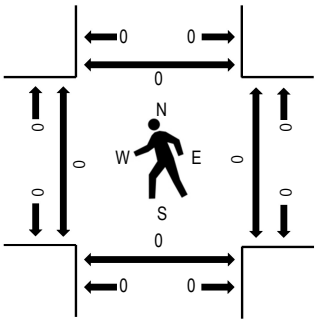


Note: Total study counts contained in parentheses.

| | HV% | PHF |
|---|---|---|
| EB | 0.0% | 0.81 |
| WB | 0.0% | 0.00 |
| NB | 20.0% | 0.63 |
| SB | 25.0% | 0.63 |
| All | 11.7% | 0.79 |

## Traffic Counts - Motorized Vehicles

| Interval Start Time | SE 5TH ST Eastbound | | | | SE 5TH ST Westbound | | | | SE EDWARDS DR Northbound | | | | SE EDWARDS DR Southbound | | | | Total | Rolling Hour |
|---|---|---|---|---|---|---|---|---|---|---|---|---|---|---|---|---|---|---|
| | U-Turn | Left | Thru | Right | U-Turn | Left | Thru | Right | U-Turn | Left | Thru | Right | U-Turn | Left | Thru | Right | | |
| 2:00 PM | 0 | 0 | 0 | 0 | 0 | 0 | 0 | 0 | 0 | 2 | 0 | 0 | 0 | 0 | 0 | 0 | 2 | 54 |
| 2:05 PM | 0 | 0 | 0 | 2 | 0 | 0 | 0 | 0 | 0 | 4 | 0 | 0 | 0 | 0 | 0 | 0 | 6 | 56 |
| 2:10 PM | 0 | 1 | 0 | 4 | 0 | 0 | 0 | 0 | 0 | 1 | 0 | 0 | 0 | 0 | 0 | 0 | 6 | 56 |
| 2:15 PM | 0 | 0 | 0 | 2 | 0 | 0 | 0 | 0 | 0 | 0 | 0 | 0 | 0 | 0 | 0 | 0 | 2 | 53 |
| 2:20 PM | 0 | 1 | 0 | 0 | 0 | 0 | 0 | 0 | 0 | 1 | 1 | 0 | 0 | 0 | 0 | 0 | 3 | 60 |
| 2:25 PM | 0 | 0 | 0 | 4 | 0 | 0 | 0 | 0 | 0 | 1 | 0 | 0 | 0 | 0 | 0 | 0 | 5 | 59 |
| 2:30 PM | 0 | 1 | 0 | 2 | 0 | 0 | 0 | 0 | 0 | 2 | 0 | 0 | 0 | 0 | 1 | 1 | 7 | 57 |
| 2:35 PM | 0 | 1 | 0 | 2 | 0 | 0 | 0 | 0 | 0 | 4 | 0 | 0 | 0 | 0 | 0 | 0 | 7 | 51 |
| 2:40 PM | 0 | 0 | 0 | 1 | 0 | 0 | 0 | 0 | 0 | 3 | 1 | 0 | 0 | 0 | 0 | 0 | 5 | 49 |
| 2:45 PM | 0 | 0 | 0 | 2 | 0 | 0 | 0 | 0 | 0 | 1 | 0 | 0 | 0 | 0 | 0 | 0 | 3 | 51 |
| 2:50 PM | 0 | 2 | 0 | 1 | 0 | 0 | 0 | 0 | 0 | 2 | 0 | 0 | 0 | 0 | 0 | 0 | 5 | 51 |
| 2:55 PM | 0 | 0 | 0 | 0 | 0 | 0 | 0 | 0 | 0 | 2 | 0 | 0 | 0 | 0 | 1 | 0 | 3 | 52 |
| 3:00 PM | 0 | 0 | 0 | 2 | 0 | 0 | 0 | 0 | 0 | 1 | 0 | 0 | 0 | 0 | 0 | 1 | 4 | 55 |
| 3:05 PM | 0 | 0 | 0 | 2 | 0 | 0 | 0 | 0 | 0 | 1 | 1 | 0 | 0 | 0 | 0 | 2 | 6 | |
| 3:10 PM | 0 | 1 | 0 | 0 | 0 | 0 | 0 | 0 | 0 | 1 | 0 | 0 | 0 | 0 | 1 | 0 | 3 | |
| 3:15 PM | 0 | 0 | 0 | 5 | 0 | 0 | 0 | 0 | 0 | 3 | 0 | 0 | 0 | 0 | 1 | 0 | 9 | |
| 3:20 PM | 0 | 0 | 0 | 2 | 0 | 0 | 0 | 0 | 0 | 0 | 0 | 0 | 0 | 0 | 0 | 0 | 2 | |
| 3:25 PM | 0 | 0 | 0 | 2 | 0 | 0 | 0 | 0 | 0 | 1 | 0 | 0 | 0 | 0 | 0 | 0 | 3 | |
| 3:30 PM | 0 | 0 | 0 | 0 | 0 | 0 | 0 | 0 | 0 | 1 | 0 | 0 | 0 | 0 | 0 | 0 | 1 | |
| 3:35 PM | 0 | 1 | 0 | 2 | 0 | 0 | 0 | 0 | 0 | 0 | 0 | 0 | 0 | 0 | 1 | 1 | 5 | |
| 3:40 PM | 0 | 1 | 0 | 4 | 0 | 0 | 0 | 0 | 0 | 1 | 1 | 0 | 0 | 0 | 0 | 0 | 7 | |
| 3:45 PM | 0 | 0 | 0 | 0 | 0 | 0 | 0 | 0 | 0 | 1 | 0 | 0 | 0 | 0 | 0 | 2 | 3 | |
| 3:50 PM | 0 | 2 | 0 | 2 | 0 | 0 | 0 | 0 | 0 | 2 | 0 | 0 | 0 | 0 | 0 | 0 | 6 | |
| 3:55 PM | 0 | 0 | 0 | 3 | 0 | 0 | 0 | 0 | 0 | 2 | 0 | 0 | 0 | 0 | 0 | 1 | 6 | |
| Count Total | 0 | 11 | 0 | 44 | 0 | 0 | 0 | 0 | 0 | 37 | 4 | 0 | 0 | 0 | 5 | 8 | 109 | |
| Peak Hour | 0 | 6 | 0 | 21 | 0 | 0 | 0 | 0 | 0 | 22 | 3 | 0 | 0 | 0 | 4 | 4 | 60 | |

**Location:** 5 SE EDWARDS DR & SE 5TH ST PM

## Traffic Counts - Heavy Vehicles, Bicycles on Road, and Pedestrians/Bicycles on Crosswalk

| Interval Start Time | Heavy Vehicles | | | | | Interval Start Time | Bicycles on Roadway | | | | | Interval Start Time | Pedestrians/Bicycles on Crosswalk | | | | |
|---|---|---|---|---|---|---|---|---|---|---|---|---|---|---|---|---|---|
| | EB | NB | WB | SB | Total | | EB | NB | WB | SB | Total | | EB | NB | WB | SB | Total |
| 2:00 PM | 0 | 0 | 0 | 0 | 0 | 2:00 PM | 0 | 0 | 0 | 0 | 0 | 2:00 PM | 0 | 0 | 0 | 0 | 0 |
| 2:05 PM | 0 | 0 | 0 | 0 | 0 | 2:05 PM | 0 | 0 | 0 | 0 | 0 | 2:05 PM | 0 | 0 | 0 | 0 | 0 |
| 2:10 PM | 0 | 0 | 0 | 0 | 0 | 2:10 PM | 0 | 0 | 0 | 0 | 0 | 2:10 PM | 2 | 0 | 0 | 0 | 2 |
| 2:15 PM | 0 | 0 | 0 | 0 | 0 | 2:15 PM | 0 | 0 | 0 | 0 | 0 | 2:15 PM | 0 | 0 | 0 | 0 | 0 |
| 2:20 PM | 0 | 1 | 0 | 0 | 1 | 2:20 PM | 0 | 0 | 0 | 0 | 0 | 2:20 PM | 0 | 0 | 0 | 0 | 0 |
| 2:25 PM | 0 | 0 | 0 | 0 | 0 | 2:25 PM | 0 | 0 | 0 | 0 | 0 | 2:25 PM | 0 | 0 | 0 | 0 | 0 |
| 2:30 PM | 0 | 0 | 0 | 1 | 1 | 2:30 PM | 0 | 0 | 0 | 0 | 0 | 2:30 PM | 0 | 0 | 0 | 0 | 0 |
| 2:35 PM | 0 | 2 | 0 | 0 | 2 | 2:35 PM | 0 | 0 | 0 | 0 | 0 | 2:35 PM | 0 | 0 | 0 | 0 | 0 |
| 2:40 PM | 0 | 1 | 0 | 0 | 1 | 2:40 PM | 0 | 0 | 0 | 0 | 0 | 2:40 PM | 0 | 0 | 0 | 0 | 0 |
| 2:45 PM | 0 | 0 | 0 | 0 | 0 | 2:45 PM | 0 | 0 | 0 | 0 | 0 | 2:45 PM | 0 | 0 | 0 | 0 | 0 |
| 2:50 PM | 0 | 0 | 0 | 0 | 0 | 2:50 PM | 0 | 0 | 0 | 0 | 0 | 2:50 PM | 0 | 0 | 0 | 0 | 0 |
| 2:55 PM | 0 | 0 | 0 | 0 | 0 | 2:55 PM | 0 | 0 | 0 | 0 | 0 | 2:55 PM | 0 | 0 | 0 | 0 | 0 |
| 3:00 PM | 0 | 0 | 0 | 0 | 0 | 3:00 PM | 0 | 0 | 0 | 0 | 0 | 3:00 PM | 0 | 0 | 0 | 0 | 0 |
| 3:05 PM | 0 | 1 | 0 | 0 | 1 | 3:05 PM | 0 | 0 | 0 | 0 | 0 | 3:05 PM | 0 | 0 | 0 | 0 | 0 |
| 3:10 PM | 0 | 0 | 0 | 1 | 1 | 3:10 PM | 0 | 0 | 0 | 0 | 0 | 3:10 PM | 0 | 0 | 0 | 0 | 0 |
| 3:15 PM | 0 | 0 | 0 | 0 | 0 | 3:15 PM | 0 | 0 | 0 | 0 | 0 | 3:15 PM | 0 | 0 | 0 | 0 | 0 |
| 3:20 PM | 0 | 0 | 0 | 0 | 0 | 3:20 PM | 0 | 0 | 0 | 0 | 0 | 3:20 PM | 0 | 0 | 0 | 0 | 0 |
| 3:25 PM | 0 | 0 | 0 | 0 | 0 | 3:25 PM | 0 | 0 | 0 | 0 | 0 | 3:25 PM | 0 | 0 | 0 | 0 | 0 |
| 3:30 PM | 0 | 0 | 0 | 0 | 0 | 3:30 PM | 0 | 0 | 0 | 0 | 0 | 3:30 PM | 0 | 0 | 0 | 0 | 0 |
| 3:35 PM | 0 | 0 | 0 | 0 | 0 | 3:35 PM | 0 | 0 | 0 | 0 | 0 | 3:35 PM | 0 | 0 | 0 | 0 | 0 |
| 3:40 PM | 0 | 0 | 0 | 0 | 0 | 3:40 PM | 0 | 0 | 0 | 0 | 0 | 3:40 PM | 0 | 0 | 0 | 0 | 0 |
| 3:45 PM | 0 | 0 | 0 | 0 | 0 | 3:45 PM | 0 | 0 | 0 | 0 | 0 | 3:45 PM | 0 | 0 | 0 | 0 | 0 |
| 3:50 PM | 0 | 0 | 0 | 0 | 0 | 3:50 PM | 0 | 0 | 0 | 0 | 0 | 3:50 PM | 0 | 0 | 0 | 0 | 0 |
| 3:55 PM | 0 | 0 | 0 | 0 | 0 | 3:55 PM | 0 | 0 | 0 | 0 | 0 | 3:55 PM | 0 | 0 | 0 | 0 | 0 |
| Count Total | 0 | 5 | 0 | 2 | 7 | Count Total | 0 | 0 | 0 | 0 | 0 | Count Total | 2 | 0 | 0 | 0 | 2 |
| Peak Hour | 0 | 5 | 0 | 2 | 7 | Peak Hour | 0 | 0 | 0 | 0 | 0 | Peak Hour | 0 | 0 | 0 | 0 | 0 |

**Location:** 6 SCHOOL ACCESS & SE 5TH ST PM

ALL TRAFFIC DATA SERVICES
(303) 216-2439
www.alltrafficdata.net

**Location:** 6 SCHOOL ACCESS & SE 5TH ST PM
**Date:** Tuesday, June 15, 2021
**Peak Hour:** 02:35 PM - 03:35 PM
**Peak 15-Minutes:** 02:40 PM - 02:55 PM

## Peak Hour

### Motorized Vehicles

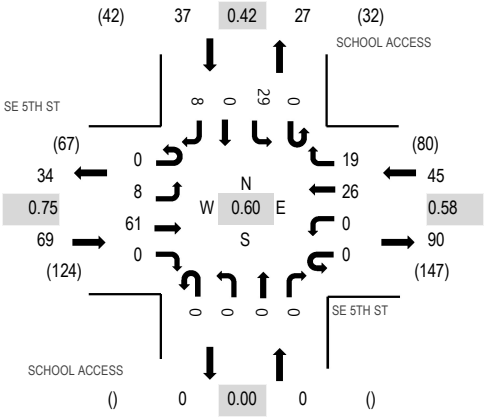


### Heavy Vehicles

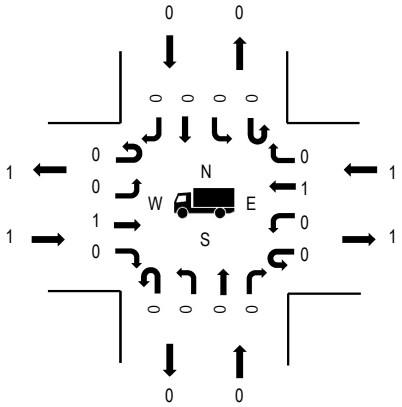


### Pedestrians

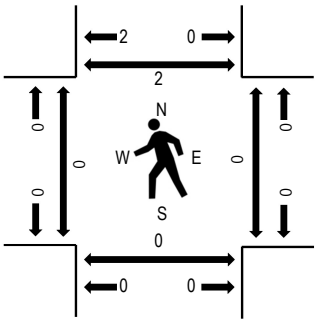


Note: Total study counts contained in parentheses.

| | HV% | PHF |
|---|---|---|
| EB | 1.4% | 0.75 |
| WB | 2.2% | 0.58 |
| NB | 0.0% | 0.00 |
| SB | 0.0% | 0.42 |
| All | 1.3% | 0.60 |

## Traffic Counts - Motorized Vehicles

| Interval Start Time | SE 5TH ST Eastbound | | | | SE 5TH ST Westbound | | | | SCHOOL ACCESS Northbound | | | | SCHOOL ACCESS Southbound | | | | Total | Rolling Hour |
|---|---|---|---|---|---|---|---|---|---|---|---|---|---|---|---|---|---|---|
| | U-Turn | Left | Thru | Right | U-Turn | Left | Thru | Right | U-Turn | Left | Thru | Right | U-Turn | Left | Thru | Right | | |
| 2:00 PM | 0 | 0 | 3 | 0 | 0 | 0 | 2 | 0 | 0 | 0 | 0 | 0 | 0 | 0 | 0 | 0 | 5 | 132 |
| 2:05 PM | 0 | 0 | 6 | 0 | 0 | 0 | 3 | 0 | 0 | 0 | 0 | 0 | 0 | 0 | 0 | 0 | 9 | 135 |
| 2:10 PM | 0 | 0 | 4 | 0 | 0 | 0 | 3 | 0 | 0 | 0 | 0 | 0 | 0 | 0 | 0 | 0 | 7 | 136 |
| 2:15 PM | 0 | 0 | 6 | 0 | 0 | 0 | 0 | 0 | 0 | 0 | 0 | 0 | 0 | 0 | 0 | 0 | 6 | 139 |
| 2:20 PM | 0 | 0 | 6 | 0 | 0 | 0 | 1 | 1 | 0 | 0 | 0 | 0 | 0 | 0 | 0 | 0 | 8 | 143 |
| 2:25 PM | 0 | 0 | 6 | 0 | 0 | 0 | 2 | 0 | 0 | 0 | 0 | 0 | 0 | 0 | 0 | 0 | 8 | 149 |
| 2:30 PM | 0 | 0 | 3 | 0 | 0 | 0 | 3 | 2 | 0 | 0 | 0 | 0 | 0 | 0 | 0 | 0 | 8 | 146 |
| 2:35 PM | 0 | 1 | 2 | 0 | 0 | 0 | 2 | 2 | 0 | 0 | 0 | 0 | 0 | 1 | 0 | 0 | 8 | 151 |
| 2:40 PM | 0 | 3 | 5 | 0 | 0 | 0 | 1 | 7 | 0 | 0 | 0 | 0 | 0 | 0 | 0 | 0 | 16 | 151 |
| 2:45 PM | 0 | 1 | 6 | 0 | 0 | 0 | 3 | 4 | 0 | 0 | 0 | 0 | 0 | 7 | 0 | 1 | 22 | 141 |
| 2:50 PM | 0 | 2 | 6 | 0 | 0 | 0 | 4 | 2 | 0 | 0 | 0 | 0 | 0 | 8 | 0 | 3 | 25 | 128 |
| 2:55 PM | 0 | 0 | 5 | 0 | 0 | 0 | 1 | 1 | 0 | 0 | 0 | 0 | 0 | 2 | 0 | 1 | 10 | 114 |
| 3:00 PM | 0 | 0 | 3 | 0 | 0 | 0 | 3 | 0 | 0 | 0 | 0 | 0 | 0 | 2 | 0 | 0 | 8 | 114 |
| 3:05 PM | 0 | 0 | 5 | 0 | 0 | 0 | 2 | 1 | 0 | 0 | 0 | 0 | 0 | 2 | 0 | 0 | 10 | |
| 3:10 PM | 0 | 0 | 7 | 0 | 0 | 0 | 2 | 0 | 0 | 0 | 0 | 0 | 0 | 1 | 0 | 0 | 10 | |
| 3:15 PM | 0 | 0 | 3 | 0 | 0 | 0 | 2 | 1 | 0 | 0 | 0 | 0 | 0 | 3 | 0 | 1 | 10 | |
| 3:20 PM | 0 | 0 | 8 | 0 | 0 | 0 | 3 | 1 | 0 | 0 | 0 | 0 | 0 | 1 | 0 | 1 | 14 | |
| 3:25 PM | 0 | 1 | 2 | 0 | 0 | 0 | 2 | 0 | 0 | 0 | 0 | 0 | 0 | 0 | 0 | 0 | 5 | |
| 3:30 PM | 0 | 0 | 9 | 0 | 0 | 0 | 1 | 0 | 0 | 0 | 0 | 0 | 0 | 2 | 0 | 1 | 13 | |
| 3:35 PM | 0 | 0 | 3 | 0 | 0 | 0 | 4 | 1 | 0 | 0 | 0 | 0 | 0 | 0 | 0 | 0 | 8 | |
| 3:40 PM | 0 | 0 | 2 | 0 | 0 | 0 | 3 | 0 | 0 | 0 | 0 | 0 | 0 | 0 | 0 | 1 | 6 | |
| 3:45 PM | 0 | 0 | 6 | 0 | 0 | 0 | 2 | 0 | 0 | 0 | 0 | 0 | 0 | 0 | 0 | 1 | 9 | |
| 3:50 PM | 0 | 0 | 4 | 0 | 0 | 0 | 4 | 0 | 0 | 0 | 0 | 0 | 0 | 3 | 0 | 0 | 11 | |
| 3:55 PM | 0 | 1 | 5 | 0 | 0 | 0 | 4 | 0 | 0 | 0 | 0 | 0 | 0 | 0 | 0 | 0 | 10 | |
| Count Total | 0 | 9 | 115 | 0 | 0 | 0 | 57 | 23 | 0 | 0 | 0 | 0 | 0 | 32 | 0 | 10 | 246 | |
| Peak Hour | 0 | 8 | 61 | 0 | 0 | 0 | 26 | 19 | 0 | 0 | 0 | 0 | 0 | 29 | 0 | 8 | 151 | |

**Location:** 6 SCHOOL ACCESS & SE 5TH ST PM

## Traffic Counts - Heavy Vehicles, Bicycles on Road, and Pedestrians/Bicycles on Crosswalk

| Interval Start Time | Heavy Vehicles | | | | | Interval Start Time | Bicycles on Roadway | | | | | Interval Start Time | Pedestrians/Bicycles on Crosswalk | | | | |
|---|---|---|---|---|---|---|---|---|---|---|---|---|---|---|---|---|---|
| | EB | NB | WB | SB | Total | | EB | NB | WB | SB | Total | | EB | NB | WB | SB | Total |
| 2:00 PM | 0 | 0 | 0 | 0 | 0 | 2:00 PM | 0 | 0 | 2 | 0 | 2 | 2:00 PM | 0 | 0 | 0 | 0 | 0 |
| 2:05 PM | 0 | 0 | 0 | 0 | 0 | 2:05 PM | 0 | 0 | 0 | 0 | 0 | 2:05 PM | 0 | 0 | 0 | 0 | 0 |
| 2:10 PM | 0 | 0 | 0 | 0 | 0 | 2:10 PM | 0 | 0 | 0 | 0 | 0 | 2:10 PM | 0 | 0 | 0 | 1 | 1 |
| 2:15 PM | 0 | 0 | 0 | 0 | 0 | 2:15 PM | 0 | 0 | 0 | 0 | 0 | 2:15 PM | 0 | 0 | 0 | 0 | 0 |
| 2:20 PM | 0 | 0 | 0 | 0 | 0 | 2:20 PM | 0 | 0 | 0 | 0 | 0 | 2:20 PM | 0 | 0 | 0 | 0 | 0 |
| 2:25 PM | 0 | 0 | 0 | 0 | 0 | 2:25 PM | 0 | 0 | 0 | 0 | 0 | 2:25 PM | 0 | 0 | 0 | 0 | 0 |
| 2:30 PM | 0 | 0 | 0 | 0 | 0 | 2:30 PM | 0 | 0 | 0 | 0 | 0 | 2:30 PM | 0 | 0 | 0 | 0 | 0 |
| 2:35 PM | 0 | 0 | 0 | 0 | 0 | 2:35 PM | 0 | 0 | 0 | 0 | 0 | 2:35 PM | 0 | 0 | 0 | 0 | 0 |
| 2:40 PM | 0 | 0 | 0 | 0 | 0 | 2:40 PM | 0 | 0 | 0 | 0 | 0 | 2:40 PM | 0 | 0 | 0 | 0 | 0 |
| 2:45 PM | 0 | 0 | 0 | 0 | 0 | 2:45 PM | 0 | 0 | 0 | 0 | 0 | 2:45 PM | 0 | 0 | 0 | 0 | 0 |
| 2:50 PM | 0 | 0 | 1 | 0 | 1 | 2:50 PM | 0 | 0 | 0 | 0 | 0 | 2:50 PM | 0 | 0 | 0 | 0 | 0 |
| 2:55 PM | 0 | 0 | 0 | 0 | 0 | 2:55 PM | 0 | 0 | 0 | 0 | 0 | 2:55 PM | 0 | 0 | 0 | 2 | 2 |
| 3:00 PM | 0 | 0 | 0 | 0 | 0 | 3:00 PM | 0 | 0 | 0 | 0 | 0 | 3:00 PM | 0 | 0 | 0 | 0 | 0 |
| 3:05 PM | 0 | 0 | 0 | 0 | 0 | 3:05 PM | 0 | 0 | 0 | 0 | 0 | 3:05 PM | 0 | 0 | 0 | 0 | 0 |
| 3:10 PM | 0 | 0 | 0 | 0 | 0 | 3:10 PM | 0 | 0 | 0 | 0 | 0 | 3:10 PM | 0 | 0 | 0 | 0 | 0 |
| 3:15 PM | 0 | 0 | 0 | 0 | 0 | 3:15 PM | 0 | 0 | 0 | 0 | 0 | 3:15 PM | 0 | 0 | 0 | 0 | 0 |
| 3:20 PM | 1 | 0 | 0 | 0 | 1 | 3:20 PM | 0 | 0 | 0 | 0 | 0 | 3:20 PM | 0 | 0 | 0 | 0 | 0 |
| 3:25 PM | 0 | 0 | 0 | 0 | 0 | 3:25 PM | 0 | 0 | 0 | 0 | 0 | 3:25 PM | 0 | 0 | 0 | 0 | 0 |
| 3:30 PM | 0 | 0 | 0 | 0 | 0 | 3:30 PM | 0 | 0 | 0 | 0 | 0 | 3:30 PM | 0 | 0 | 0 | 0 | 0 |
| 3:35 PM | 0 | 0 | 0 | 0 | 0 | 3:35 PM | 1 | 0 | 0 | 0 | 1 | 3:35 PM | 0 | 0 | 0 | 0 | 0 |
| 3:40 PM | 0 | 0 | 0 | 0 | 0 | 3:40 PM | 0 | 0 | 0 | 0 | 0 | 3:40 PM | 0 | 0 | 0 | 0 | 0 |
| 3:45 PM | 0 | 0 | 0 | 0 | 0 | 3:45 PM | 0 | 0 | 0 | 0 | 0 | 3:45 PM | 0 | 0 | 0 | 0 | 0 |
| 3:50 PM | 0 | 0 | 0 | 0 | 0 | 3:50 PM | 0 | 0 | 0 | 0 | 0 | 3:50 PM | 0 | 0 | 0 | 2 | 2 |
| 3:55 PM | 0 | 0 | 0 | 0 | 0 | 3:55 PM | 0 | 0 | 0 | 0 | 0 | 3:55 PM | 0 | 0 | 0 | 0 | 0 |
| Count Total | 1 | 0 | 1 | 0 | 2 | Count Total | 1 | 0 | 2 | 0 | 3 | Count Total | 0 | 0 | 0 | 5 | 5 |
| Peak Hour | 1 | 0 | 1 | 0 | 2 | Peak Hour | 0 | 0 | 0 | 0 | 0 | Peak Hour | 0 | 0 | 0 | 2 | 2 |

# SECTION 3: COVID-19 ADJUSTMENT WORKSHEET

## COVID-19 Adjustment Factor

| | | Average Weekday (June) - Tues, Wed, Thurs only | | | | | |
|---|---|---|---|---|---|---|---|
| | | ATR 2019 | | ATR 2020 | | ATR 2021 | |
| | HOUR | McMinnville | Newberg | McMinnville | Newberg | McMinnville | Newberg |
| 12AM - 1AM | 1 | 102 | 206 | | | 84 | 178 |
| 1AM - 2AM | 2 | 64 | 135 | | | 64 | 119 |
| 2AM - 3AM | 3 | 73 | 139 | | | 73 | 123 |
| 3AM - 4AM | 4 | 102 | 230 | | | 109 | 201 |
| 4AM - 5AM | 5 | 227 | 626 | | | 233 | 560 |
| 5AM - 6AM | 6 | 438 | 1,605 | | | 450 | 1,237 |
| 6AM - 7AM | 7 | 622 | 2,610 | | | 590 | 2,117 |
| 7AM - 8AM | 8 | 815 | 2,621 | | | 792 | 2,427 |
| 8AM - 9AM | 9 | 777 | 2,322 | | | 721 | 2,106 |
| 9AM - 10AM | 10 | 838 | 2,181 | | | 824 | 2,073 |
| 10AM - 11AM | 11 | 925 | 2,142 | | | 966 | 2,082 |
| 11AM - 12PM | 12 | 1,008 | 2,194 | | | 1,058 | 2,152 |
| 12PM - 1PM | 13 | 1,031 | 2,309 | | | 1,092 | 2,288 |
| 1PM - 2PM | 14 | 1,052 | 2,277 | | | 1,094 | 2,271 |
| 2PM -3PM | 15 | 1,110 | 2,540 | | | 1,145 | 2,488 |
| 3PM - 4PM | 16 | 1,170 | 2,819 | | | 1,232 | 2,789 |
| 4PM - 5PM | 17 | 1,213 | 3,069 | | | 1,305 | 3,093 |
| 5PM - 6PM | 18 | 1,156 | 3,056 | | | 1,154 | 3,050 |
| 6PM - 7PM | 19 | 818 | 2,375 | | | 846 | 2,173 |
| 7PM - 8PM | 20 | 589 | 1,574 | | | 600 | 1,483 |
| 8PM - 9PM | 21 | 474 | 1,262 | | | 463 | 1,197 |
| 9PM - 10PM | 22 | 334 | 1,004 | | | 370 | 926 |
| 10PM - 11PM | 23 | 246 | 645 | | | 252 | 574 |
| 11PM - 12AM | 24 | 156 | 380 | | | 152 | 328 |
| | **Total** | **15,339** | **40,318** | **-** | **-** | **15,670** | **38,036** |

| Hour | 2021/2019 Ratio | | | Yearly Growth Rate | | |
|---|---|---|---|---|---|---|
| | McMinnville | Newberg | Average | | | |
| 8-9 AM | 0.927 | 0.907 | 0.917 | -4.1% | Apply adjustment factor: | 1.12 |
| 3-4 PM | 1.053 | 0.989 | 1.021 | 1.07% | Do Not Apply Adjustment Factor | |

| Hour | Adjusted 2021 | | Adjusted 2021/2019 Ratio | | | Yearly Growth Rate |
|---|---|---|---|---|---|---|
| | McMinnville | Newberg | McMinnville | Newberg | Average | |
| 8-9 AM | 807 | 2359 | 1.038 | 1.016 | 1.03 | 1.36% |
| 3-4 PM | Do Not Apply Adjustment Factor | | | | | |

# SECTION 4: SEASONAL ADJUSTMENT FACTOR WORKSHEET

## Seasonal Adjustment Factor

| School year only (Sept - June) | | | | | | | | | | | |
|---|---|---|---|---|---|---|---|---|---|---|---|
| **ATR** | **Location** | **Month** | **2019** | **2018** | **2017** | **2016** | **2015** | | **Factor per ATR** | | **Final Factor** |
| 36-004 | OR99W/OR219 MP 21.81 | Peak (June) | 107 | 107 | 105 | 107 | 105 | | 106.3 | | **1.00** |
| | *0.01 mile west of Brutscher Street* | Count (June) | 107 | 107 | 105 | 107 | 105 | | 106.3 | 1.00 | |
| 36-006 | OR 18 MP 41.00 | Peak (June) | 105 | 102 | 103 | 103 | 101 | | 102.7 | | |
| | *3.36 miles south of Pacific Highway West* | Count (June) | 105 | 102 | 102 | 103 | 101 | | 102.3 | 1.00 | |

*Shading* = Highest and Lowest Data Omited per APM

| All months | | | | | | | | | | | |
|---|---|---|---|---|---|---|---|---|---|---|---|
| **ATR** | **Location** | **Month** | **2019** | **2018** | **2017** | **2016** | **2015** | | **Factor per ATR** | | **Final Factor** |
| 36-004 | OR99W/OR219 MP 21.81 | Peak (July or Aug) | 110 | 108 | 109 | 109 | 108 | | 108.7 | | **1.05** |
| | *0.01 mile west of Brutscher Street* | Count (June) | 107 | 107 | 105 | 107 | 105 | | 106.3 | 1.02 | |
| 36-006 | OR 18 MP 41.00 | Peak (July or Aug) | 111 | 110 | 113 | 109 | 109 | | 110.0 | | |
| | *3.36 miles south of Pacific Highway West* | Count (June) | 105 | 102 | 102 | 103 | 101 | | 102.3 | 1.07 | |

*Shading* = Highest and Lowest Data Omited per APM

# SECTION 5: CRASH DATA (2015 – 2019)

**Crash Data (2015-2019)**

| Intersection | Street Name | Intersecting Street Name | Year | Crash Type | Collision Type | Crash Cause 1 | Severity | Bike / Ped Related |
|---|---|---|---|---|---|---|---|---|
| 1 | PACIFIC HY 99W | 5TH ST | 2015 | S-1STOP | REAR | F AVOID | Possible Injury (C) | Neither |
| 1 | PACIFIC HY 99W | 5TH ST | 2015 | S-STRGHT | REAR | F AVOID | PDO | Neither |
| 1 | PACIFIC HY 99W | 5TH ST | 2015 | S-STRGHT | REAR | F AVOID | PDO | Neither |
| 1 | PACIFIC HY 99W | 5TH ST | 2015 | ANGL-OTH | TURN | NO-YIELD | PDO | Neither |
| 1 | PACIFIC HY 99W | 5TH ST | 2016 | S-1STOP | REAR | F AVOID | Possible Injury (C) | Neither |
| 1 | PACIFIC HY 99W | 5TH ST | 2016 | S-1STOP | REAR | F AVOID | Possible Injury (C) | Neither |
| 1 | PACIFIC HY 99W | 5TH ST | 2016 | S-1STOP | REAR | CARELESS | Possible Injury (C) | Neither |
| 1 | PACIFIC HY 99W | 5TH ST | 2016 | S-1STOP | REAR | F AVOID | Possible Injury (C) | Neither |
| 1 | PACIFIC HY 99W | 5TH ST | 2016 | S-1STOP | REAR | F AVOID | Possible Injury (C) | Neither |
| 1 | PACIFIC HY 99W | 5TH ST | 2016 | S-1STOP | REAR | TOO-CLOS | Possible Injury (C) | Neither |
| 1 | PACIFIC HY 99W | 5TH ST | 2016 | S-1STOP | REAR | TOO-CLOS | Possible Injury (C) | Neither |
| 1 | PACIFIC HY 99W | 5TH ST | 2016 | S-1STOP | REAR | F AVOID | PDO | Neither |
| 1 | PACIFIC HY 99W | 5TH ST | 2016 | S-1STOP | REAR | F AVOID | PDO | Neither |
| 1 | PACIFIC HY 99W | 5TH ST | 2016 | S-1STOP | REAR | CARELESS | PDO | Neither |
| 1 | PACIFIC HY 99W | 5TH ST | 2016 | S-1STOP | REAR | F AVOID | PDO | Neither |
| 1 | PACIFIC HY 99W | 5TH ST | 2017 | S-1STOP | REAR | F AVOID | Possible Injury (C) | Neither |
| 1 | PACIFIC HY 99W | 5TH ST | 2017 | S-1STOP | REAR | F AVOID | Possible Injury (C) | Neither |
| 1 | PACIFIC HY 99W | 5TH ST | 2017 | S-1STOP | REAR | F AVOID | PDO | Neither |
| 1 | PACIFIC HY 99W | 5TH ST | 2017 | S-1STOP | REAR | F AVOID | PDO | Neither |
| 1 | PACIFIC HY 99W | 5TH ST | 2019 | S-1STOP | REAR | TOO-CLOS | Minor Injury (B) | Neither |
| 1 | PACIFIC HY 99W | 5TH ST | 2019 | ANGL-OTH | ANGL | DIS SIG | Possible Injury (C) | Neither |
| 1 | PACIFIC HY 99W | 5TH ST | 2019 | S-1STOP | REAR | F AVOID | Possible Injury (C) | Neither |
| 1 | PACIFIC HY 99W | 5TH ST | 2019 | S-1STOP | REAR | TOO-FAST | PDO | Neither |
| 1 | PACIFIC HY 99W | 5TH ST | 2019 | S-1STOP | REAR | F AVOID | PDO | Neither |
| 2 | PACIFIC HY 99W | 10TH ST | 2015 | PED | PED | NO-YIELD | Minor Injury (B) | Pedestrian |
| 2 | 10TH ST | PACIFIC HY 99W | 2015 | O-OTHER | BACK | OTHR-IMP | PDO | Neither |
| 2 | PACIFIC HY 99W | 10TH ST | 2016 | S-1STOP | REAR | TOO-CLOS | Possible Injury (C) | Neither |
| 2 | PACIFIC HY 99W | 10TH ST | 2016 | S-1STOP | REAR | F AVOID | Possible Injury (C) | Neither |
| 2 | PACIFIC HY 99W | 10TH ST | 2016 | S-1STOP | REAR | F AVOID | Possible Injury (C) | Neither |
| 2 | PACIFIC HY 99W | 10TH ST | 2016 | S-STRGHT | REAR | F AVOID | PDO | Neither |
| 2 | PACIFIC HY 99W | 10TH ST | 2017 | S-1STOP | REAR | F AVOID | PDO | Neither |
| 2 | PACIFIC HY 99W | 10TH ST | 2017 | ANGL-OTH | TURN | NO-YIELD | PDO | Neither |
| 3 | PACIFIC HY 99W | PARKS RD | 2015 | S-1STOP | REAR | INATTENT | Minor Injury (B) | Neither |
| 3 | NIEDERBERGER RD | PACIFIC HY 99W | 2015 | S-1STOP | REAR | F AVOID | PDO | Neither |
| 3 | PACIFIC HY 99W | NIEDERBERGER RD | 2016 | S-1STOP | REAR | F AVOID | Possible Injury (C) | Neither |
| 3 | PACIFIC HY 99W | NIEDERBERGER RD | 2016 | S-1STOP | REAR | F AVOID | Possible Injury (C) | Neither |
| 3 | NIEDERBERGER RD | PACIFIC HY 99W | 2016 | S-1STOP | REAR | TOO-CLOS | PDO | Neither |
| 3 | NIEDERBERGER RD | PACIFIC HY 99W | 2016 | ANGL-OTH | TURN | NO-YIELD | PDO | Neither |
| 3 | NIEDERBERGER RD | PACIFIC HY 99W | 2017 | ANGL-OTH | ANGL | NO-YIELD | Possible Injury (C) | Neither |
| 3 | PACIFIC HY 99W | NIEDERBERGER RD | 2017 | S-1STOP | REAR | F AVOID | PDO | Neither |
| 3 | PACIFIC HY 99W | NIEDERBERGER RD | 2018 | S-1STOP | REAR | FATIGUE | Possible Injury (C) | Neither |
| 3 | PACIFIC HY 99W | PARKS DR | 2018 | S-1STOP | REAR | TOO-CLOS | Possible Injury (C) | Neither |
| 3 | PACIFIC HY 99W | PARKS DR | 2018 | S-1STOP | REAR | F AVOID | Possible Injury (C) | Neither |
| 3 | PACIFIC HY 99W | PARKS DR | 2018 | S-1STOP | REAR | INATTENT | Possible Injury (C) | Neither |
| 3 | PACIFIC HY 99W | PARKS DR | 2018 | S-1STOP | REAR | F AVOID | PDO | Neither |
| 3 | NIEDERBERGER RD | PACIFIC HY 99W | 2019 | S-1STOP | REAR | TOO-CLOS | Possible Injury (C) | Neither |

## Critical Crash Rate Calculations

| General & Site Information | |
|---|---|
| **Analyst:** | Travis Larson |
| **Agency/Company:** | DKS Associates |
| **Date:** | 8/19/2021 |
| **Project Name:** | Dundee Elementary School |

**Intersection Crash Data**

| Intersection | Intersection Type | Year 2015 | 2016 | 2017 | 2018 | 2019 | Total |
|---|---|---|---|---|---|---|---|
| OR 99W @ 5th Street | Urban 4SG | 4 | 11 | 4 | 0 | 5 | 24 |
| OR 99W @ 10th Street | Urban 4ST | 2 | 4 | 2 | 0 | 0 | 8 |
| OR 99W @ Parks Drive/Niederberge | Urban 4ST | 2 | 4 | 2 | 5 | 1 | 14 |
| Edwards Drive @ 5th Street | Urban 3ST | 0 | 0 | 0 | 0 | 0 | 0 |
| Edwards Drive @ 8th Street | Urban 4ST | 0 | 0 | 0 | 0 | 0 | 0 |
| | Total | 8 | 19 | 8 | 5 | 6 | 46 |

**Intersection Population Type Crash Rate**
**Average Crash Rate per intersection type**

| Intersection Pop. Type | Sum of Crashes | Sum of 5-year MEV | Avg Crash Rate for Ref Pop. | INT in Pop |
|---|---|---|---|---|
| Rural 3SG | 0 | 0 | | |
| Rural 3ST | 0 | 0 | | |
| Rural 4SG | 0 | 0 | | |
| Rural 4ST | 0 | 0 | | |
| Urban 3ST | 0 | 2 | 0.0000 | 1 |
| Urban 3SG | 0 | 0 | | |
| Urban 4ST | 22 | 71 | 0.3102 | 3 |
| Urban 4SG | 24 | 41 | 0.5798 | 1 |

*Intermediate calculation for critical rate

**Critical Rate Calculation**

| Intersection | AADT Entering Intersection | 5-year MEV | Crash Total | Intersection Population Type | Intersection Crash Rate | *Reference Population Crash Rate | Critical Rate | Over Critical | Exhibit 4-1 | Outcome |
|---|---|---|---|---|---|---|---|---|---|---|
| OR 99W @ 5th Street | 22,680 | 41.4 | 24 | Urban 4SG | 0.580 | APM Exhibit 4-1 | | | 0.860 | Under |
| OR 99W @ 10th Street | 18,820 | 34.3 | 8 | Urban 4ST | 0.233 | APM Exhibit 4-1 | | | 0.408 | Under |
| / @ Parks Drive/Niederberger Road | 19,340 | 35.3 | 14 | Urban 4ST | 0.397 | APM Exhibit 4-1 | | | 0.408 | Under |
| Edwards Drive @ 5th Street | 1,100 | 2.0 | 0 | Urban 3ST | 0.000 | APM Exhibit 4-1 | | | 0.293 | Under |
| Edwards Drive @ 8th Street | 700 | 1.3 | 0 | Urban 4ST | 0.000 | APM Exhibit 4-1 | | | 0.408 | Under |

*** There are less than 5 intersections per population type, therefore Exhibit 4-1 must be used for all.**

# SECTION 6: HCM REPORTS – EXISTING 2021

| Movement | EBL | EBT | EBR | WBL | WBT | WBR | NBL | NBT | NBR | SBL | SBT | SBR |
|---|---|---|---|---|---|---|---|---|---|---|---|---|
| Lane Configurations | | | | | | | | | | | | |
| Traffic Volume (veh/h) | 77 | 4 | 10 | 7 | 4 | 47 | 8 | 510 | 10 | 25 | 398 | 34 |
| Future Volume (veh/h) | 77 | 4 | 10 | 7 | 4 | 47 | 8 | 510 | 10 | 25 | 398 | 34 |
| Initial Q (Qb), veh | 0 | 0 | 0 | 0 | 0 | 0 | 0 | 0 | 0 | 0 | 0 | 0 |
| Ped-Bike Adj(A_pbT) | 1.00 | | 1.00 | 1.00 | | 1.00 | 1.00 | | 1.00 | 1.00 | | 1.00 |
| Parking Bus, Adj | 1.00 | 1.00 | 1.00 | 1.00 | 1.00 | 1.00 | 1.00 | 1.00 | 1.00 | 1.00 | 1.00 | 1.00 |
| Work Zone On Approach | | No | | | No | | | No | | | No | |
| Adj Sat Flow, veh/h/ln | 1723 | 1300 | 1750 | 1750 | 1750 | 1682 | 1750 | 1723 | 1627 | 1750 | 1695 | 1750 |
| Adj Flow Rate, veh/h | 88 | 5 | 1 | 8 | 5 | 0 | 9 | 580 | 10 | 28 | 452 | 36 |
| Peak Hour Factor | 0.88 | 0.88 | 0.88 | 0.88 | 0.88 | 0.88 | 0.88 | 0.88 | 0.88 | 0.88 | 0.88 | 0.88 |
| Percent Heavy Veh, % | 2 | 33 | 0 | 0 | 0 | 5 | 0 | 2 | 9 | 0 | 4 | 0 |
| Cap, veh/h | 354 | 189 | 38 | 134 | 11 | 0 | 511 | 908 | 16 | 446 | 865 | 69 |
| Arrive On Green | 0.07 | 0.18 | 0.18 | 0.02 | 0.02 | 0.00 | 0.01 | 0.54 | 0.54 | 0.03 | 0.56 | 0.56 |
| Sat Flow, veh/h | 1641 | 1051 | 210 | 948 | 592 | 0 | 1667 | 1688 | 29 | 1667 | 1550 | 123 |
| Grp Volume(v), veh/h | 88 | 0 | 6 | 13 | 0 | 0 | 9 | 0 | 590 | 28 | 0 | 488 |
| Grp Sat Flow(s),veh/h/ln | 1641 | 0 | 1262 | 1540 | 0 | 0 | 1667 | 0 | 1717 | 1667 | 0 | 1673 |
| Q Serve(g_s), s | 2.5 | 0.0 | 0.2 | 0.4 | 0.0 | 0.0 | 0.1 | 0.0 | 12.1 | 0.4 | 0.0 | 9.1 |
| Cycle Q Clear(g_c), s | 2.5 | 0.0 | 0.2 | 0.4 | 0.0 | 0.0 | 0.1 | 0.0 | 12.1 | 0.4 | 0.0 | 9.1 |
| Prop In Lane | 1.00 | | 0.17 | 0.62 | | 0.00 | 1.00 | | 0.02 | 1.00 | | 0.07 |
| Lane Grp Cap(c), veh/h | 354 | 0 | 226 | 145 | 0 | 0 | 511 | 0 | 923 | 446 | 0 | 934 |
| V/C Ratio(X) | 0.25 | 0.00 | 0.03 | 0.09 | 0.00 | 0.00 | 0.02 | 0.00 | 0.64 | 0.06 | 0.00 | 0.52 |
| Avail Cap(c_a), veh/h | 406 | 0 | 648 | 611 | 0 | 0 | 662 | 0 | 923 | 563 | 0 | 934 |
| HCM Platoon Ratio | 1.00 | 1.00 | 1.00 | 1.00 | 1.00 | 1.00 | 1.00 | 1.00 | 1.00 | 1.00 | 1.00 | 1.00 |
| Upstream Filter(I) | 1.00 | 0.00 | 1.00 | 1.00 | 0.00 | 0.00 | 1.00 | 0.00 | 1.00 | 1.00 | 0.00 | 1.00 |
| Uniform Delay (d), s/veh | 20.0 | 0.0 | 16.9 | 24.2 | 0.0 | 0.0 | 5.7 | 0.0 | 8.1 | 6.2 | 0.0 | 6.9 |
| Incr Delay (d2), s/veh | 0.4 | 0.0 | 0.0 | 0.3 | 0.0 | 0.0 | 0.0 | 0.0 | 3.4 | 0.1 | 0.0 | 0.5 |
| Initial Q Delay(d3),s/veh | 0.0 | 0.0 | 0.0 | 0.0 | 0.0 | 0.0 | 0.0 | 0.0 | 0.0 | 0.0 | 0.0 | 0.0 |
| %ile BackOfQ(50%),veh/ln | 0.9 | 0.0 | 0.1 | 0.2 | 0.0 | 0.0 | 0.0 | 0.0 | 4.0 | 0.1 | 0.0 | 2.4 |
| Unsig. Movement Delay, s/veh | | | | | | | | | | | | |
| LnGrp Delay(d),s/veh | 20.3 | 0.0 | 16.9 | 24.5 | 0.0 | 0.0 | 5.8 | 0.0 | 11.5 | 6.3 | 0.0 | 7.4 |
| LnGrp LOS | C | A | B | C | A | A | A | A | B | A | A | A |
| Approach Vol, veh/h | | 94 | | | 13 | | | 599 | | | 516 | |
| Approach Delay, s/veh | | 20.1 | | | 24.5 | | | 11.4 | | | 7.3 | |
| Approach LOS | | C | | | C | | | B | | | A | |

| Timer - Assigned Phs | 1 | 2 | | 4 | 5 | 6 | 7 | 8 |
|---|---|---|---|---|---|---|---|---|
| Phs Duration (G+Y+Rc), s | 6.1 | 30.8 | | 12.9 | 5.1 | 31.8 | 8.0 | 4.9 |
| Change Period (Y+Rc), s | 4.5 | 4.0 | | 4.0 | 4.5 | 4.0 | 4.5 | 4.0 |
| Max Green Setting (Gmax), s | 5.1 | 26.8 | | 25.6 | 5.1 | 26.8 | 5.1 | 16.0 |
| Max Q Clear Time (g_c+I1), s | 2.4 | 14.1 | | 2.2 | 2.1 | 11.1 | 4.5 | 2.4 |
| Green Ext Time (p_c), s | 0.0 | 3.2 | | 0.0 | 0.0 | 2.8 | 0.0 | 0.0 |

| Intersection Summary | |
|---|---|
| HCM 6th Ctrl Delay | 10.5 |
| HCM 6th LOS | B |

| Intersection | |
|---|---|
| Int Delay, s/veh | 0.7 |

| Movement | EBL | EBT | EBR | WBL | WBT | WBR | NBL | NBT | NBR | SBL | SBT | SBR |
|---|---|---|---|---|---|---|---|---|---|---|---|---|
| Lane Configurations | | | | | | | | | | | | |
| Traffic Vol, veh/h | 1 | 1 | 1 | 11 | 1 | 15 | 1 | 501 | 4 | 8 | 396 | 1 |
| Future Vol, veh/h | 1 | 1 | 1 | 11 | 1 | 15 | 1 | 501 | 4 | 8 | 396 | 1 |
| Conflicting Peds, #/hr | 0 | 0 | 0 | 0 | 0 | 0 | 1 | 0 | 1 | 1 | 0 | 1 |
| Sign Control | Stop | Stop | Stop | Stop | Stop | Stop | Free | Free | Free | Free | Free | Free |
| RT Channelized | - | - | None | - | - | None | - | - | None | - | - | None |
| Storage Length | - | - | - | - | - | - | 150 | - | - | 150 | - | - |
| Veh in Median Storage, # | - | 0 | - | - | 0 | - | - | 0 | - | - | 0 | - |
| Grade, % | - | 0 | - | - | 0 | - | - | 0 | - | - | 0 | - |
| Peak Hour Factor | 85 | 85 | 85 | 85 | 85 | 85 | 85 | 85 | 85 | 85 | 85 | 85 |
| Heavy Vehicles, % | 0 | 0 | 0 | 0 | 0 | 0 | 0 | 3 | 33 | 0 | 5 | 0 |
| Mvmt Flow | 1 | 1 | 1 | 13 | 1 | 18 | 1 | 589 | 5 | 9 | 466 | 1 |

| Major/Minor | Minor2 | | | Minor1 | | | Major1 | | | Major2 | | |
|---|---|---|---|---|---|---|---|---|---|---|---|---|
| Conflicting Flow All | 1089 | 1083 | 468 | 1081 | 1081 | 593 | 468 | 0 | 0 | 595 | 0 | 0 |
| Stage 1 | 486 | 486 | - | 595 | 595 | - | - | - | - | - | - | - |
| Stage 2 | 603 | 597 | - | 486 | 486 | - | - | - | - | - | - | - |
| Critical Hdwy | 7.1 | 6.5 | 6.2 | 7.1 | 6.5 | 6.2 | 4.1 | - | - | 4.1 | - | - |
| Critical Hdwy Stg 1 | 6.1 | 5.5 | - | 6.1 | 5.5 | - | - | - | - | - | - | - |
| Critical Hdwy Stg 2 | 6.1 | 5.5 | - | 6.1 | 5.5 | - | - | - | - | - | - | - |
| Follow-up Hdwy | 3.5 | 4 | 3.3 | 3.5 | 4 | 3.3 | 2.2 | - | - | 2.2 | - | - |
| Pot Cap-1 Maneuver | 195 | 219 | 599 | 197 | 220 | 509 | 1104 | - | - | 991 | - | - |
| Stage 1 | 566 | 554 | - | 494 | 496 | - | - | - | - | - | - | - |
| Stage 2 | 489 | 495 | - | 566 | 554 | - | - | - | - | - | - | - |
| Platoon blocked, % | | | | | | | | - | - | | - | - |
| Mov Cap-1 Maneuver | 186 | 216 | 598 | 194 | 217 | 509 | 1103 | - | - | 990 | - | - |
| Mov Cap-2 Maneuver | 186 | 216 | - | 194 | 217 | - | - | - | - | - | - | - |
| Stage 1 | 565 | 548 | - | 493 | 495 | - | - | - | - | - | - | - |
| Stage 2 | 470 | 494 | - | 559 | 548 | - | - | - | - | - | - | - |

| Approach | EB | WB | NB | SB |
|---|---|---|---|---|
| HCM Control Delay, s | 19.2 | 18.6 | 0 | 0.2 |
| HCM LOS | C | C | | |

| Minor Lane/Major Mvmt | NBL | NBT | NBR | EBLn1 | WBLn1 | SBL | SBT | SBR |
|---|---|---|---|---|---|---|---|---|
| Capacity (veh/h) | 1103 | - | - | 257 | 297 | 990 | - | - |
| HCM Lane V/C Ratio | 0.001 | - | - | 0.014 | 0.107 | 0.01 | - | - |
| HCM Control Delay (s) | 8.3 | - | - | 19.2 | 18.6 | 8.7 | - | - |
| HCM Lane LOS | A | - | - | C | C | A | - | - |
| HCM 95th %tile Q(veh) | 0 | - | - | 0 | 0.4 | 0 | - | - |

| Intersection | |
|---|---|
| Int Delay, s/veh | 1.3 |

| Movement | EBL | EBT | EBR | WBL | WBT | WBR | NBL | NBT | NBR | SBL | SBT | SBR |
|---|---|---|---|---|---|---|---|---|---|---|---|---|
| Lane Configurations | | | | | | | | | | | | |
| Traffic Vol, veh/h | 12 | 1 | 24 | 8 | 1 | 3 | 21 | 488 | 11 | 4 | 375 | 19 |
| Future Vol, veh/h | 12 | 1 | 24 | 8 | 1 | 3 | 21 | 488 | 11 | 4 | 375 | 19 |
| Conflicting Peds, #/hr | 0 | 0 | 0 | 0 | 0 | 0 | 0 | 0 | 0 | 0 | 0 | 0 |
| Sign Control | Stop | Stop | Stop | Stop | Stop | Stop | Free | Free | Free | Free | Free | Free |
| RT Channelized | - | - | None | - | - | None | - | - | None | - | - | None |
| Storage Length | - | - | - | - | - | - | 220 | - | - | 150 | - | - |
| Veh in Median Storage, # | - | 0 | - | - | 0 | - | - | 0 | - | - | 0 | - |
| Grade, % | - | 0 | - | - | 0 | - | - | 0 | - | - | 0 | - |
| Peak Hour Factor | 85 | 85 | 85 | 85 | 85 | 85 | 85 | 85 | 85 | 85 | 85 | 85 |
| Heavy Vehicles, % | 44 | 0 | 32 | 0 | 0 | 0 | 25 | 2 | 10 | 0 | 3 | 62 |
| Mvmt Flow | 14 | 1 | 28 | 9 | 1 | 4 | 25 | 574 | 13 | 5 | 441 | 22 |

| Major/Minor | Minor2 | | | Minor1 | | | Major1 | | | Major2 | | |
|---|---|---|---|---|---|---|---|---|---|---|---|---|
| Conflicting Flow All | 1095 | 1099 | 452 | 1108 | 1104 | 581 | 463 | 0 | 0 | 587 | 0 | 0 |
| Stage 1 | 462 | 462 | - | 631 | 631 | - | - | - | - | - | - | - |
| Stage 2 | 633 | 637 | - | 477 | 473 | - | - | - | - | - | - | - |
| Critical Hdwy | 7.54 | 6.5 | 6.52 | 7.1 | 6.5 | 6.2 | 4.35 | - | - | 4.1 | - | - |
| Critical Hdwy Stg 1 | 6.54 | 5.5 | - | 6.1 | 5.5 | - | - | - | - | - | - | - |
| Critical Hdwy Stg 2 | 6.54 | 5.5 | - | 6.1 | 5.5 | - | - | - | - | - | - | - |
| Follow-up Hdwy | 3.896 | 4 | 3.588 | 3.5 | 4 | 3.3 | 2.425 | - | - | 2.2 | - | - |
| Pot Cap-1 Maneuver | 159 | 214 | 550 | 189 | 213 | 517 | 988 | - | - | 998 | - | - |
| Stage 1 | 507 | 568 | - | 472 | 477 | - | - | - | - | - | - | - |
| Stage 2 | 404 | 475 | - | 573 | 562 | - | - | - | - | - | - | - |
| Platoon blocked, % | | | | | | | | - | - | | - | - |
| Mov Cap-1 Maneuver | 154 | 208 | 550 | 174 | 207 | 517 | 988 | - | - | 998 | - | - |
| Mov Cap-2 Maneuver | 154 | 208 | - | 174 | 207 | - | - | - | - | - | - | - |
| Stage 1 | 494 | 565 | - | 460 | 465 | - | - | - | - | - | - | - |
| Stage 2 | 390 | 463 | - | 540 | 559 | - | - | - | - | - | - | - |

| Approach | EB | WB | NB | SB |
|---|---|---|---|---|
| HCM Control Delay, s | 19.4 | 23.2 | 0.4 | 0.1 |
| HCM LOS | C | C | | |

| Minor Lane/Major Mvmt | NBL | NBT | NBR | EBLn1 | WBLn1 | SBL | SBT | SBR |
|---|---|---|---|---|---|---|---|---|
| Capacity (veh/h) | 988 | - | - | 293 | 212 | 998 | - | - |
| HCM Lane V/C Ratio | 0.025 | - | - | 0.149 | 0.067 | 0.005 | - | - |
| HCM Control Delay (s) | 8.7 | - | - | 19.4 | 23.2 | 8.6 | - | - |
| HCM Lane LOS | A | - | - | C | C | A | - | - |
| HCM 95th %tile Q(veh) | 0.1 | - | - | 0.5 | 0.2 | 0 | - | - |

| Intersection | |
|---|---|
| Int Delay, s/veh | 2.9 |

| Movement | EBL | EBT | EBR | WBL | WBT | WBR | NBL | NBT | NBR | SBL | SBT | SBR |
|---|---|---|---|---|---|---|---|---|---|---|---|---|
| Lane Configurations | | | | | | | | | | | | |
| Traffic Vol, veh/h | 1 | 1 | 1 | 3 | 1 | 3 | 1 | 12 | 1 | 1 | 9 | 1 |
| Future Vol, veh/h | 1 | 1 | 1 | 3 | 1 | 3 | 1 | 12 | 1 | 1 | 9 | 1 |
| Conflicting Peds, #/hr | 1 | 0 | 1 | 1 | 0 | 1 | 1 | 0 | 0 | 0 | 0 | 1 |
| Sign Control | Stop | Stop | Stop | Stop | Stop | Stop | Free | Free | Free | Free | Free | Free |
| RT Channelized | - | - | None | - | - | None | - | - | None | - | - | None |
| Storage Length | - | - | - | - | - | - | - | - | - | - | - | - |
| Veh in Median Storage, # | - | 0 | - | - | 0 | - | - | 0 | - | - | 0 | - |
| Grade, % | - | 0 | - | - | 0 | - | - | 0 | - | - | 0 | - |
| Peak Hour Factor | 70 | 70 | 70 | 70 | 70 | 70 | 70 | 70 | 70 | 70 | 70 | 70 |
| Heavy Vehicles, % | 50 | 0 | 0 | 0 | 0 | 0 | 0 | 8 | 0 | 0 | 17 | 0 |
| Mvmt Flow | 1 | 1 | 1 | 4 | 1 | 4 | 1 | 17 | 1 | 1 | 13 | 1 |

| Major/Minor | Minor2 | | | Minor1 | | | Major1 | | | Major2 | | |
|---|---|---|---|---|---|---|---|---|---|---|---|---|
| Conflicting Flow All | 40 | 37 | 16 | 38 | 37 | 19 | 15 | 0 | 0 | 18 | 0 | 0 |
| Stage 1 | 17 | 17 | - | 20 | 20 | - | - | - | - | - | - | - |
| Stage 2 | 23 | 20 | - | 18 | 17 | - | - | - | - | - | - | - |
| Critical Hdwy | 7.6 | 6.5 | 6.2 | 7.1 | 6.5 | 6.2 | 4.1 | - | - | 4.1 | - | - |
| Critical Hdwy Stg 1 | 6.6 | 5.5 | - | 6.1 | 5.5 | - | - | - | - | - | - | - |
| Critical Hdwy Stg 2 | 6.6 | 5.5 | - | 6.1 | 5.5 | - | - | - | - | - | - | - |
| Follow-up Hdwy | 3.95 | 4 | 3.3 | 3.5 | 4 | 3.3 | 2.2 | - | - | 2.2 | - | - |
| Pot Cap-1 Maneuver | 856 | 859 | 1069 | 972 | 859 | 1065 | 1616 | - | - | 1612 | - | - |
| Stage 1 | 892 | 885 | - | 1004 | 883 | - | - | - | - | - | - | - |
| Stage 2 | 885 | 883 | - | 1006 | 885 | - | - | - | - | - | - | - |
| Platoon blocked, % | | | | | | | | - | - | | - | - |
| Mov Cap-1 Maneuver | 848 | 856 | 1067 | 967 | 856 | 1064 | 1614 | - | - | 1612 | - | - |
| Mov Cap-2 Maneuver | 848 | 856 | - | 967 | 856 | - | - | - | - | - | - | - |
| Stage 1 | 890 | 883 | - | 1003 | 882 | - | - | - | - | - | - | - |
| Stage 2 | 878 | 882 | - | 1001 | 883 | - | - | - | - | - | - | - |

| Approach | EB | WB | NB | SB |
|---|---|---|---|---|
| HCM Control Delay, s | 9 | 8.7 | 0.5 | 0.7 |
| HCM LOS | A | A | | |

| Minor Lane/Major Mvmt | NBL | NBT | NBR | EBLn1 | WBLn1 | SBL | SBT | SBR |
|---|---|---|---|---|---|---|---|---|
| Capacity (veh/h) | 1614 | - | - | 913 | 987 | 1612 | - | - |
| HCM Lane V/C Ratio | 0.001 | - | - | 0.005 | 0.01 | 0.001 | - | - |
| HCM Control Delay (s) | 7.2 | 0 | - | 9 | 8.7 | 7.2 | 0 | - |
| HCM Lane LOS | A | A | - | A | A | A | A | - |
| HCM 95th %tile Q(veh) | 0 | - | - | 0 | 0 | 0 | - | - |

| Intersection | |
|---|---|
| Int Delay, s/veh | 0.6 |

| Movement | EBL | EBT | WBT | WBR | SBL | SBR |
|---|---|---|---|---|---|---|
| Lane Configurations | | | | | | |
| Traffic Vol, veh/h | 1 | 16 | 34 | 1 | 1 | 2 |
| Future Vol, veh/h | 1 | 16 | 34 | 1 | 1 | 2 |
| Conflicting Peds, #/hr | 0 | 0 | 0 | 0 | 0 | 1 |
| Sign Control | Free | Free | Free | Free | Stop | Stop |
| RT Channelized | - | None | - | None | - | None |
| Storage Length | - | - | - | - | - | - |
| Veh in Median Storage, # | - | 0 | 0 | - | 0 | - |
| Grade, % | - | 0 | 0 | - | 0 | - |
| Peak Hour Factor | 73 | 73 | 73 | 73 | 73 | 73 |
| Heavy Vehicles, % | 0 | 0 | 0 | 0 | 0 | 0 |
| Mvmt Flow | 1 | 22 | 47 | 1 | 1 | 3 |

| Major/Minor | Major1 | | Major2 | | Minor2 | |
|---|---|---|---|---|---|---|
| Conflicting Flow All | 48 | 0 | - | 0 | 72 | 49 |
| Stage 1 | - | - | - | - | 48 | - |
| Stage 2 | - | - | - | - | 24 | - |
| Critical Hdwy | 4.1 | - | - | - | 6.4 | 6.2 |
| Critical Hdwy Stg 1 | - | - | - | - | 5.4 | - |
| Critical Hdwy Stg 2 | - | - | - | - | 5.4 | - |
| Follow-up Hdwy | 2.2 | - | - | - | 3.5 | 3.3 |
| Pot Cap-1 Maneuver | 1572 | - | - | - | 937 | 1025 |
| Stage 1 | - | - | - | - | 980 | - |
| Stage 2 | - | - | - | - | 1004 | - |
| Platoon blocked, % | | - | - | - | | |
| Mov Cap-1 Maneuver | 1572 | - | - | - | 936 | 1024 |
| Mov Cap-2 Maneuver | - | - | - | - | 936 | - |
| Stage 1 | - | - | - | - | 979 | - |
| Stage 2 | - | - | - | - | 1004 | - |

| Approach | EB | WB | SB |
|---|---|---|---|
| HCM Control Delay, s | 0.4 | 0 | 8.6 |
| HCM LOS | | | A |

| Minor Lane/Major Mvmt | EBL | EBT | WBT | WBR | SBLn1 |
|---|---|---|---|---|---|
| Capacity (veh/h) | 1572 | - | - | - | 993 |
| HCM Lane V/C Ratio | 0.001 | - | - | - | 0.004 |
| HCM Control Delay (s) | 7.3 | 0 | - | - | 8.6 |
| HCM Lane LOS | A | A | - | - | A |
| HCM 95th %tile Q(veh) | 0 | - | - | - | 0 |

| Movement | EBL | EBT | EBR | WBL | WBT | WBR | NBL | NBT | NBR | SBL | SBT | SBR |
|---|---|---|---|---|---|---|---|---|---|---|---|---|
| Lane Configurations | | | | | | | | | | | | |
| Traffic Volume (veh/h) | 74 | 6 | 13 | 10 | 7 | 29 | 14 | 515 | 6 | 36 | 627 | 26 |
| Future Volume (veh/h) | 74 | 6 | 13 | 10 | 7 | 29 | 14 | 515 | 6 | 36 | 627 | 26 |
| Initial Q (Qb), veh | 0 | 0 | 0 | 0 | 0 | 0 | 0 | 0 | 0 | 0 | 0 | 0 |
| Ped-Bike Adj(A_pbT) | 0.99 | | 0.99 | 0.97 | | 0.95 | 1.00 | | 0.98 | 1.00 | | 0.98 |
| Parking Bus, Adj | 1.00 | 1.00 | 1.00 | 1.00 | 1.00 | 1.00 | 1.00 | 1.00 | 1.00 | 1.00 | 1.00 | 1.00 |
| Work Zone On Approach | | No | | | No | | | No | | | No | |
| Adj Sat Flow, veh/h/ln | 1709 | 1750 | 1750 | 1750 | 1750 | 1709 | 1586 | 1723 | 1750 | 1750 | 1723 | 1750 |
| Adj Flow Rate, veh/h | 77 | 6 | 2 | 10 | 7 | 1 | 15 | 536 | 6 | 38 | 653 | 26 |
| Peak Hour Factor | 0.96 | 0.96 | 0.96 | 0.96 | 0.96 | 0.96 | 0.96 | 0.96 | 0.96 | 0.96 | 0.96 | 0.96 |
| Percent Heavy Veh, % | 3 | 0 | 0 | 0 | 0 | 3 | 12 | 2 | 0 | 0 | 2 | 0 |
| Cap, veh/h | 311 | 205 | 68 | 117 | 18 | 3 | 398 | 1012 | 11 | 540 | 1012 | 40 |
| Arrive On Green | 0.06 | 0.16 | 0.16 | 0.03 | 0.03 | 0.03 | 0.02 | 0.60 | 0.60 | 0.04 | 0.62 | 0.62 |
| Sat Flow, veh/h | 1628 | 1254 | 418 | 838 | 587 | 84 | 1511 | 1700 | 19 | 1667 | 1644 | 65 |
| Grp Volume(v), veh/h | 77 | 0 | 8 | 18 | 0 | 0 | 15 | 0 | 542 | 38 | 0 | 679 |
| Grp Sat Flow(s),veh/h/ln | 1628 | 0 | 1672 | 1509 | 0 | 0 | 1511 | 0 | 1719 | 1667 | 0 | 1709 |
| Q Serve(g_s), s | 2.7 | 0.0 | 0.2 | 0.7 | 0.0 | 0.0 | 0.2 | 0.0 | 11.5 | 0.5 | 0.0 | 15.6 |
| Cycle Q Clear(g_c), s | 2.7 | 0.0 | 0.2 | 0.7 | 0.0 | 0.0 | 0.2 | 0.0 | 11.5 | 0.5 | 0.0 | 15.6 |
| Prop In Lane | 1.00 | | 0.25 | 0.56 | | 0.06 | 1.00 | | 0.01 | 1.00 | | 0.04 |
| Lane Grp Cap(c), veh/h | 311 | 0 | 273 | 138 | 0 | 0 | 398 | 0 | 1023 | 540 | 0 | 1053 |
| V/C Ratio(X) | 0.25 | 0.00 | 0.03 | 0.13 | 0.00 | 0.00 | 0.04 | 0.00 | 0.53 | 0.07 | 0.00 | 0.65 |
| Avail Cap(c_a), veh/h | 349 | 0 | 692 | 481 | 0 | 0 | 495 | 0 | 1023 | 613 | 0 | 1053 |
| HCM Platoon Ratio | 1.00 | 1.00 | 1.00 | 1.00 | 1.00 | 1.00 | 1.00 | 1.00 | 1.00 | 1.00 | 1.00 | 1.00 |
| Upstream Filter(I) | 1.00 | 0.00 | 1.00 | 1.00 | 0.00 | 0.00 | 1.00 | 0.00 | 1.00 | 1.00 | 0.00 | 1.00 |
| Uniform Delay (d), s/veh | 24.9 | 0.0 | 21.7 | 29.3 | 0.0 | 0.0 | 6.4 | 0.0 | 7.4 | 5.4 | 0.0 | 7.6 |
| Incr Delay (d2), s/veh | 0.4 | 0.0 | 0.0 | 0.4 | 0.0 | 0.0 | 0.0 | 0.0 | 2.0 | 0.1 | 0.0 | 1.4 |
| Initial Q Delay(d3),s/veh | 0.0 | 0.0 | 0.0 | 0.0 | 0.0 | 0.0 | 0.0 | 0.0 | 0.0 | 0.0 | 0.0 | 0.0 |
| %ile BackOfQ(50%),veh/ln | 1.0 | 0.0 | 0.1 | 0.3 | 0.0 | 0.0 | 0.1 | 0.0 | 3.8 | 0.1 | 0.0 | 4.6 |
| Unsig. Movement Delay, s/veh | | | | | | | | | | | | |
| LnGrp Delay(d),s/veh | 25.4 | 0.0 | 21.8 | 29.8 | 0.0 | 0.0 | 6.4 | 0.0 | 9.3 | 5.4 | 0.0 | 8.9 |
| LnGrp LOS | C | A | C | C | A | A | A | A | A | A | A | A |
| Approach Vol, veh/h | | 85 | | | 18 | | | 557 | | | 717 | |
| Approach Delay, s/veh | | 25.0 | | | 29.8 | | | 9.3 | | | 8.7 | |
| Approach LOS | | C | | | C | | | A | | | A | |

| Timer - Assigned Phs | 1 | 2 | | 4 | 5 | 6 | 7 | 8 |
|---|---|---|---|---|---|---|---|---|
| Phs Duration (G+Y+Rc), s | 6.9 | 40.8 | | 14.1 | 5.6 | 42.1 | 8.2 | 5.9 |
| Change Period (Y+Rc), s | 4.5 | 4.0 | | 4.0 | 4.5 | 4.0 | 4.5 | 4.0 |
| Max Green Setting (Gmax), s | 5.1 | 36.8 | | 25.6 | 5.1 | 36.8 | 5.1 | 16.0 |
| Max Q Clear Time (g_c+I1), s | 2.5 | 13.5 | | 2.2 | 2.2 | 17.6 | 4.7 | 2.7 |
| Green Ext Time (p_c), s | 0.0 | 3.7 | | 0.0 | 0.0 | 4.7 | 0.0 | 0.0 |

| Intersection Summary | |
|---|---|
| HCM 6th Ctrl Delay | 10.2 |
| HCM 6th LOS | B |

| Intersection | |
|---|---|
| Int Delay, s/veh | 0.3 |

| Movement | EBL | EBT | EBR | WBL | WBT | WBR | NBL | NBT | NBR | SBL | SBT | SBR |
|---|---|---|---|---|---|---|---|---|---|---|---|---|
| Lane Configurations | | | | | | | | | | | | |
| Traffic Vol, veh/h | 1 | 1 | 1 | 2 | 1 | 7 | 1 | 521 | 6 | 5 | 609 | 1 |
| Future Vol, veh/h | 1 | 1 | 1 | 2 | 1 | 7 | 1 | 521 | 6 | 5 | 609 | 1 |
| Conflicting Peds, #/hr | 2 | 0 | 0 | 0 | 0 | 2 | 3 | 0 | 1 | 1 | 0 | 3 |
| Sign Control | Stop | Stop | Stop | Stop | Stop | Stop | Free | Free | Free | Free | Free | Free |
| RT Channelized | - | - | None | - | - | None | - | - | None | - | - | None |
| Storage Length | - | - | - | - | - | - | 150 | - | - | 150 | - | - |
| Veh in Median Storage, # | - | 0 | - | - | 0 | - | - | 0 | - | - | 0 | - |
| Grade, % | - | 0 | - | - | 0 | - | - | 0 | - | - | 0 | - |
| Peak Hour Factor | 87 | 87 | 87 | 87 | 87 | 87 | 87 | 87 | 87 | 87 | 87 | 87 |
| Heavy Vehicles, % | 0 | 0 | 0 | 0 | 0 | 0 | 0 | 3 | 0 | 0 | 3 | 0 |
| Mvmt Flow | 1 | 1 | 1 | 2 | 1 | 8 | 1 | 599 | 7 | 6 | 700 | 1 |

| Major/Minor | Minor2 | | | Minor1 | | | Major1 | | | Major2 | | |
|---|---|---|---|---|---|---|---|---|---|---|---|---|
| Conflicting Flow All | 1327 | 1325 | 704 | 1320 | 1322 | 606 | 704 | 0 | 0 | 607 | 0 | 0 |
| Stage 1 | 716 | 716 | - | 606 | 606 | - | - | - | - | - | - | - |
| Stage 2 | 611 | 609 | - | 714 | 716 | - | - | - | - | - | - | - |
| Critical Hdwy | 7.1 | 6.5 | 6.2 | 7.1 | 6.5 | 6.2 | 4.1 | - | - | 4.1 | - | - |
| Critical Hdwy Stg 1 | 6.1 | 5.5 | - | 6.1 | 5.5 | - | - | - | - | - | - | - |
| Critical Hdwy Stg 2 | 6.1 | 5.5 | - | 6.1 | 5.5 | - | - | - | - | - | - | - |
| Follow-up Hdwy | 3.5 | 4 | 3.3 | 3.5 | 4 | 3.3 | 2.2 | - | - | 2.2 | - | - |
| Pot Cap-1 Maneuver | 134 | 157 | 440 | 135 | 158 | 501 | 903 | - | - | 981 | - | - |
| Stage 1 | 424 | 437 | - | 487 | 490 | - | - | - | - | - | - | - |
| Stage 2 | 484 | 488 | - | 425 | 437 | - | - | - | - | - | - | - |
| Platoon blocked, % | | | | | | | | - | - | | - | - |
| Mov Cap-1 Maneuver | 130 | 155 | 439 | 133 | 156 | 500 | 900 | - | - | 980 | - | - |
| Mov Cap-2 Maneuver | 130 | 155 | - | 133 | 156 | - | - | - | - | - | - | - |
| Stage 1 | 422 | 433 | - | 486 | 489 | - | - | - | - | - | - | - |
| Stage 2 | 474 | 487 | - | 420 | 433 | - | - | - | - | - | - | - |

| Approach | EB | WB | NB | SB |
|---|---|---|---|---|
| HCM Control Delay, s | 25.1 | 18.3 | 0 | 0.1 |
| HCM LOS | D | C | | |

| Minor Lane/Major Mvmt | NBL | NBT | NBR | EBLn1 | WBLn1 | SBL | SBT | SBR |
|---|---|---|---|---|---|---|---|---|
| Capacity (veh/h) | 900 | - | - | 183 | 282 | 980 | - | - |
| HCM Lane V/C Ratio | 0.001 | - | - | 0.019 | 0.041 | 0.006 | - | - |
| HCM Control Delay (s) | 9 | - | - | 25.1 | 18.3 | 8.7 | - | - |
| HCM Lane LOS | A | - | - | D | C | A | - | - |
| HCM 95th %tile Q(veh) | 0 | - | - | 0.1 | 0.1 | 0 | - | - |

| Intersection | |
|---|---|
| Int Delay, s/veh | 1.5 |

| Movement | EBL | EBT | EBR | WBL | WBT | WBR | NBL | NBT | NBR | SBL | SBT | SBR |
|---|---|---|---|---|---|---|---|---|---|---|---|---|
| Lane Configurations | | | | | | | | | | | | |
| Traffic Vol, veh/h | 19 | 1 | 23 | 6 | 1 | 2 | 23 | 498 | 13 | 2 | 555 | 25 |
| Future Vol, veh/h | 19 | 1 | 23 | 6 | 1 | 2 | 23 | 498 | 13 | 2 | 555 | 25 |
| Conflicting Peds, #/hr | 0 | 0 | 0 | 0 | 0 | 0 | 0 | 0 | 0 | 0 | 0 | 0 |
| Sign Control | Stop | Stop | Stop | Stop | Stop | Stop | Free | Free | Free | Free | Free | Free |
| RT Channelized | - | - | None | - | - | None | - | - | None | - | - | None |
| Storage Length | - | - | - | - | - | - | 220 | - | - | 150 | - | - |
| Veh in Median Storage, # | - | 0 | - | - | 0 | - | - | 0 | - | - | 0 | - |
| Grade, % | - | 0 | - | - | 0 | - | - | 0 | - | - | 0 | - |
| Peak Hour Factor | 88 | 88 | 88 | 88 | 88 | 88 | 88 | 88 | 88 | 88 | 88 | 88 |
| Heavy Vehicles, % | 27 | 0 | 24 | 0 | 0 | 25 | 11 | 2 | 0 | 0 | 1 | 44 |
| Mvmt Flow | 22 | 1 | 26 | 7 | 1 | 2 | 26 | 566 | 15 | 2 | 631 | 28 |

| Major/Minor | Minor2 | | | Minor1 | | | Major1 | | | Major2 | | |
|---|---|---|---|---|---|---|---|---|---|---|---|---|
| Conflicting Flow All | 1276 | 1282 | 645 | 1289 | 1289 | 574 | 659 | 0 | 0 | 581 | 0 | 0 |
| Stage 1 | 649 | 649 | - | 626 | 626 | - | - | - | - | - | - | - |
| Stage 2 | 627 | 633 | - | 663 | 663 | - | - | - | - | - | - | - |
| Critical Hdwy | 7.37 | 6.5 | 6.44 | 7.1 | 6.5 | 6.45 | 4.21 | - | - | 4.1 | - | - |
| Critical Hdwy Stg 1 | 6.37 | 5.5 | - | 6.1 | 5.5 | - | - | - | - | - | - | - |
| Critical Hdwy Stg 2 | 6.37 | 5.5 | - | 6.1 | 5.5 | - | - | - | - | - | - | - |
| Follow-up Hdwy | 3.743 | 4 | 3.516 | 3.5 | 4 | 3.525 | 2.299 | - | - | 2.2 | - | - |
| Pot Cap-1 Maneuver | 127 | 167 | 435 | 142 | 165 | 477 | 888 | - | - | 1003 | - | - |
| Stage 1 | 419 | 469 | - | 475 | 480 | - | - | - | - | - | - | - |
| Stage 2 | 432 | 476 | - | 454 | 462 | - | - | - | - | - | - | - |
| Platoon blocked, % | | | | | | | | - | - | | - | - |
| Mov Cap-1 Maneuver | 123 | 162 | 435 | 130 | 160 | 477 | 888 | - | - | 1003 | - | - |
| Mov Cap-2 Maneuver | 123 | 162 | - | 130 | 160 | - | - | - | - | - | - | - |
| Stage 1 | 407 | 468 | - | 461 | 466 | - | - | - | - | - | - | - |
| Stage 2 | 416 | 462 | - | 425 | 461 | - | - | - | - | - | - | - |

| Approach | EB | WB | NB | SB |
|---|---|---|---|---|
| HCM Control Delay, s | 28.6 | 29.2 | 0.4 | 0 |
| HCM LOS | D | D | | |

| Minor Lane/Major Mvmt | NBL | NBT | NBR | EBLn1 | WBLn1 | SBL | SBT | SBR |
|---|---|---|---|---|---|---|---|---|
| Capacity (veh/h) | 888 | - | - | 201 | 159 | 1003 | - | - |
| HCM Lane V/C Ratio | 0.029 | - | - | 0.243 | 0.064 | 0.002 | - | - |
| HCM Control Delay (s) | 9.2 | - | - | 28.6 | 29.2 | 8.6 | - | - |
| HCM Lane LOS | A | - | - | D | D | A | - | - |
| HCM 95th %tile Q(veh) | 0.1 | - | - | 0.9 | 0.2 | 0 | - | - |

| Intersection | |
|---|---|
| Int Delay, s/veh | 3.5 |

| Movement | EBL | EBT | EBR | WBL | WBT | WBR | NBL | NBT | NBR | SBL | SBT | SBR |
|---|---|---|---|---|---|---|---|---|---|---|---|---|
| Lane Configurations | | | | | | | | | | | | |
| Traffic Vol, veh/h | 2 | 1 | 1 | 3 | 1 | 1 | 1 | 5 | 1 | 1 | 9 | 1 |
| Future Vol, veh/h | 2 | 1 | 1 | 3 | 1 | 1 | 1 | 5 | 1 | 1 | 9 | 1 |
| Conflicting Peds, #/hr | 0 | 0 | 1 | 1 | 0 | 0 | 4 | 0 | 0 | 0 | 0 | 4 |
| Sign Control | Stop | Stop | Stop | Stop | Stop | Stop | Free | Free | Free | Free | Free | Free |
| RT Channelized | - | - | None | - | - | None | - | - | None | - | - | None |
| Storage Length | - | - | - | - | - | - | - | - | - | - | - | - |
| Veh in Median Storage, # | - | 0 | - | - | 0 | - | - | 0 | - | - | 0 | - |
| Grade, % | - | 0 | - | - | 0 | - | - | 0 | - | - | 0 | - |
| Peak Hour Factor | 69 | 69 | 69 | 69 | 69 | 69 | 69 | 69 | 69 | 69 | 69 | 69 |
| Heavy Vehicles, % | 100 | 0 | 0 | 0 | 0 | 0 | 0 | 15 | 0 | 0 | 0 | 0 |
| Mvmt Flow | 3 | 1 | 1 | 4 | 1 | 1 | 1 | 7 | 1 | 1 | 13 | 1 |

| Major/Minor | Minor2 | | | Minor1 | | | Major1 | | | Major2 | | |
|---|---|---|---|---|---|---|---|---|---|---|---|---|
| Conflicting Flow All | 31 | 30 | 19 | 28 | 30 | 8 | 18 | 0 | 0 | 8 | 0 | 0 |
| Stage 1 | 20 | 20 | - | 10 | 10 | - | - | - | - | - | - | - |
| Stage 2 | 11 | 10 | - | 18 | 20 | - | - | - | - | - | - | - |
| Critical Hdwy | 8.1 | 6.5 | 6.2 | 7.1 | 6.5 | 6.2 | 4.1 | - | - | 4.1 | - | - |
| Critical Hdwy Stg 1 | 7.1 | 5.5 | - | 6.1 | 5.5 | - | - | - | - | - | - | - |
| Critical Hdwy Stg 2 | 7.1 | 5.5 | - | 6.1 | 5.5 | - | - | - | - | - | - | - |
| Follow-up Hdwy | 4.4 | 4 | 3.3 | 3.5 | 4 | 3.3 | 2.2 | - | - | 2.2 | - | - |
| Pot Cap-1 Maneuver | 778 | 867 | 1065 | 987 | 867 | 1080 | 1612 | - | - | 1625 | - | - |
| Stage 1 | 796 | 883 | - | 1016 | 891 | - | - | - | - | - | - | - |
| Stage 2 | 806 | 891 | - | 1006 | 883 | - | - | - | - | - | - | - |
| Platoon blocked, % | | | | | | | | - | - | | - | - |
| Mov Cap-1 Maneuver | 772 | 862 | 1060 | 982 | 862 | 1080 | 1606 | - | - | 1625 | - | - |
| Mov Cap-2 Maneuver | 772 | 862 | - | 982 | 862 | - | - | - | - | - | - | - |
| Stage 1 | 792 | 879 | - | 1015 | 890 | - | - | - | - | - | - | - |
| Stage 2 | 803 | 890 | - | 1001 | 879 | - | - | - | - | - | - | - |

| Approach | EB | WB | NB | SB |
|---|---|---|---|---|
| HCM Control Delay, s | 9.3 | 8.7 | 1 | 0.7 |
| HCM LOS | A | A | | |

| Minor Lane/Major Mvmt | NBL | NBT | NBR | EBLn1 | WBLn1 | SBL | SBT | SBR |
|---|---|---|---|---|---|---|---|---|
| Capacity (veh/h) | 1606 | - | - | 852 | 973 | 1625 | - | - |
| HCM Lane V/C Ratio | 0.001 | - | - | 0.007 | 0.007 | 0.001 | - | - |
| HCM Control Delay (s) | 7.2 | 0 | - | 9.3 | 8.7 | 7.2 | 0 | - |
| HCM Lane LOS | A | A | - | A | A | A | A | - |
| HCM 95th %tile Q(veh) | 0 | - | - | 0 | 0 | 0 | - | - |

| Intersection | |
|---|---|
| Int Delay, s/veh | 2 |

| Movement | EBL | EBT | WBT | WBR | SBL | SBR |
|---|---|---|---|---|---|---|
| Lane Configurations | | | | | | |
| Traffic Vol, veh/h | 4 | 19 | 16 | 2 | 4 | 4 |
| Future Vol, veh/h | 4 | 19 | 16 | 2 | 4 | 4 |
| Conflicting Peds, #/hr | 0 | 0 | 0 | 0 | 0 | 0 |
| Sign Control | Free | Free | Free | Free | Stop | Stop |
| RT Channelized | - | None | - | None | - | None |
| Storage Length | - | - | - | - | - | - |
| Veh in Median Storage, # | - | 0 | 0 | - | 0 | - |
| Grade, % | - | 0 | 0 | - | 0 | - |
| Peak Hour Factor | 68 | 68 | 68 | 68 | 68 | 68 |
| Heavy Vehicles, % | 0 | 0 | 0 | 0 | 0 | 0 |
| Mvmt Flow | 6 | 28 | 24 | 3 | 6 | 6 |

| Major/Minor | Major1 | | Major2 | | Minor2 | |
|---|---|---|---|---|---|---|
| Conflicting Flow All | 27 | 0 | - | 0 | 66 | 26 |
| Stage 1 | - | - | - | - | 26 | - |
| Stage 2 | - | - | - | - | 40 | - |
| Critical Hdwy | 4.1 | - | - | - | 6.4 | 6.2 |
| Critical Hdwy Stg 1 | - | - | - | - | 5.4 | - |
| Critical Hdwy Stg 2 | - | - | - | - | 5.4 | - |
| Follow-up Hdwy | 2.2 | - | - | - | 3.5 | 3.3 |
| Pot Cap-1 Maneuver | 1600 | - | - | - | 944 | 1056 |
| Stage 1 | - | - | - | - | 1002 | - |
| Stage 2 | - | - | - | - | 988 | - |
| Platoon blocked, % | | - | - | - | | |
| Mov Cap-1 Maneuver | 1600 | - | - | - | 940 | 1056 |
| Mov Cap-2 Maneuver | - | - | - | - | 940 | - |
| Stage 1 | - | - | - | - | 998 | - |
| Stage 2 | - | - | - | - | 988 | - |

| Approach | EB | WB | SB |
|---|---|---|---|
| HCM Control Delay, s | 1.3 | 0 | 8.7 |
| HCM LOS | | | A |

| Minor Lane/Major Mvmt | EBL | EBT | WBT | WBR | SBLn1 |
|---|---|---|---|---|---|
| Capacity (veh/h) | 1600 | - | - | - | 995 |
| HCM Lane V/C Ratio | 0.004 | - | - | - | 0.012 |
| HCM Control Delay (s) | 7.3 | 0 | - | - | 8.7 |
| HCM Lane LOS | A | A | - | - | A |
| HCM 95th %tile Q(veh) | 0 | - | - | - | 0 |

# SECTION 7: HCM REPORTS – FUTURE 2024

| Movement | EBL | EBT | EBR | WBL | WBT | WBR | NBL | NBT | NBR | SBL | SBT | SBR |
|---|---|---|---|---|---|---|---|---|---|---|---|---|
| Lane Configurations | | | | | | | | | | | | |
| Traffic Volume (veh/h) | 77 | 4 | 10 | 7 | 4 | 47 | 8 | 513 | 10 | 25 | 400 | 34 |
| Future Volume (veh/h) | 77 | 4 | 10 | 7 | 4 | 47 | 8 | 513 | 10 | 25 | 400 | 34 |
| Initial Q (Qb), veh | 0 | 0 | 0 | 0 | 0 | 0 | 0 | 0 | 0 | 0 | 0 | 0 |
| Ped-Bike Adj(A_pbT) | 1.00 | | 1.00 | 1.00 | | 1.00 | 1.00 | | 1.00 | 1.00 | | 1.00 |
| Parking Bus, Adj | 1.00 | 1.00 | 1.00 | 1.00 | 1.00 | 1.00 | 1.00 | 1.00 | 1.00 | 1.00 | 1.00 | 1.00 |
| Work Zone On Approach | | No | | | No | | | No | | | No | |
| Adj Sat Flow, veh/h/ln | 1723 | 1300 | 1750 | 1750 | 1750 | 1682 | 1750 | 1723 | 1627 | 1750 | 1695 | 1750 |
| Adj Flow Rate, veh/h | 88 | 5 | 6 | 8 | 5 | 0 | 9 | 583 | 10 | 28 | 455 | 36 |
| Peak Hour Factor | 0.88 | 0.88 | 0.88 | 0.88 | 0.88 | 0.88 | 0.88 | 0.88 | 0.88 | 0.88 | 0.88 | 0.88 |
| Percent Heavy Veh, % | 2 | 33 | 0 | 0 | 0 | 5 | 0 | 2 | 9 | 0 | 4 | 0 |
| Cap, veh/h | 359 | 98 | 118 | 138 | 13 | 0 | 505 | 904 | 15 | 440 | 861 | 68 |
| Arrive On Green | 0.07 | 0.18 | 0.18 | 0.02 | 0.02 | 0.00 | 0.01 | 0.54 | 0.54 | 0.03 | 0.56 | 0.56 |
| Sat Flow, veh/h | 1641 | 538 | 645 | 945 | 590 | 0 | 1667 | 1688 | 29 | 1667 | 1550 | 123 |
| Grp Volume(v), veh/h | 88 | 0 | 11 | 13 | 0 | 0 | 9 | 0 | 593 | 28 | 0 | 491 |
| Grp Sat Flow(s),veh/h/ln | 1641 | 0 | 1183 | 1535 | 0 | 0 | 1667 | 0 | 1717 | 1667 | 0 | 1673 |
| Q Serve(g_s), s | 2.5 | 0.0 | 0.4 | 0.4 | 0.0 | 0.0 | 0.1 | 0.0 | 12.3 | 0.4 | 0.0 | 9.2 |
| Cycle Q Clear(g_c), s | 2.5 | 0.0 | 0.4 | 0.4 | 0.0 | 0.0 | 0.1 | 0.0 | 12.3 | 0.4 | 0.0 | 9.2 |
| Prop In Lane | 1.00 | | 0.55 | 0.62 | | 0.00 | 1.00 | | 0.02 | 1.00 | | 0.07 |
| Lane Grp Cap(c), veh/h | 359 | 0 | 217 | 151 | 0 | 0 | 505 | 0 | 919 | 440 | 0 | 930 |
| V/C Ratio(X) | 0.25 | 0.00 | 0.05 | 0.09 | 0.00 | 0.00 | 0.02 | 0.00 | 0.65 | 0.06 | 0.00 | 0.53 |
| Avail Cap(c_a), veh/h | 410 | 0 | 605 | 607 | 0 | 0 | 655 | 0 | 919 | 556 | 0 | 930 |
| HCM Platoon Ratio | 1.00 | 1.00 | 1.00 | 1.00 | 1.00 | 1.00 | 1.00 | 1.00 | 1.00 | 1.00 | 1.00 | 1.00 |
| Upstream Filter(I) | 1.00 | 0.00 | 1.00 | 1.00 | 0.00 | 0.00 | 1.00 | 0.00 | 1.00 | 1.00 | 0.00 | 1.00 |
| Uniform Delay (d), s/veh | 19.9 | 0.0 | 16.9 | 24.1 | 0.0 | 0.0 | 5.8 | 0.0 | 8.3 | 6.3 | 0.0 | 7.0 |
| Incr Delay (d2), s/veh | 0.4 | 0.0 | 0.1 | 0.2 | 0.0 | 0.0 | 0.0 | 0.0 | 3.5 | 0.1 | 0.0 | 0.6 |
| Initial Q Delay(d3),s/veh | 0.0 | 0.0 | 0.0 | 0.0 | 0.0 | 0.0 | 0.0 | 0.0 | 0.0 | 0.0 | 0.0 | 0.0 |
| %ile BackOfQ(50%),veh/ln | 0.9 | 0.0 | 0.1 | 0.2 | 0.0 | 0.0 | 0.0 | 0.0 | 4.1 | 0.1 | 0.0 | 2.4 |
| Unsig. Movement Delay, s/veh | | | | | | | | | | | | |
| LnGrp Delay(d),s/veh | 20.2 | 0.0 | 17.0 | 24.4 | 0.0 | 0.0 | 5.9 | 0.0 | 11.7 | 6.4 | 0.0 | 7.6 |
| LnGrp LOS | C | A | B | C | A | A | A | A | B | A | A | A |
| Approach Vol, veh/h | | 99 | | | 13 | | | 602 | | | 519 | |
| Approach Delay, s/veh | | 19.9 | | | 24.4 | | | 11.7 | | | 7.5 | |
| Approach LOS | | B | | | C | | | B | | | A | |

| Timer - Assigned Phs | 1 | 2 | | 4 | 5 | 6 | 7 | 8 |
|---|---|---|---|---|---|---|---|---|
| Phs Duration (G+Y+Rc), s | 6.1 | 30.8 | | 13.2 | 5.1 | 31.8 | 8.0 | 5.1 |
| Change Period (Y+Rc), s | 4.5 | 4.0 | | 4.0 | 4.5 | 4.0 | 4.5 | 4.0 |
| Max Green Setting (Gmax), s | 5.1 | 26.8 | | 25.6 | 5.1 | 26.8 | 5.1 | 16.0 |
| Max Q Clear Time (g_c+I1), s | 2.4 | 14.3 | | 2.4 | 2.1 | 11.2 | 4.5 | 2.4 |
| Green Ext Time (p_c), s | 0.0 | 3.2 | | 0.0 | 0.0 | 2.8 | 0.0 | 0.0 |

| Intersection Summary | | | |
|---|---|---|---|
| HCM 6th Ctrl Delay | | | 10.7 |
| HCM 6th LOS | | | B |

| Intersection | |
|---|---|
| Int Delay, s/veh | 0.7 |

| Movement | EBL | EBT | EBR | WBL | WBT | WBR | NBL | NBT | NBR | SBL | SBT | SBR |
|---|---|---|---|---|---|---|---|---|---|---|---|---|
| Lane Configurations | | | | | | | | | | | | |
| Traffic Vol, veh/h | 1 | 1 | 1 | 11 | 1 | 15 | 1 | 504 | 4 | 8 | 398 | 1 |
| Future Vol, veh/h | 1 | 1 | 1 | 11 | 1 | 15 | 1 | 504 | 4 | 8 | 398 | 1 |
| Conflicting Peds, #/hr | 0 | 0 | 0 | 0 | 0 | 0 | 1 | 0 | 1 | 1 | 0 | 1 |
| Sign Control | Stop | Stop | Stop | Stop | Stop | Stop | Free | Free | Free | Free | Free | Free |
| RT Channelized | - | - | None | - | - | None | - | - | None | - | - | None |
| Storage Length | - | - | - | - | - | - | 150 | - | - | 150 | - | - |
| Veh in Median Storage, # | - | 0 | - | - | 0 | - | - | 0 | - | - | 0 | - |
| Grade, % | - | 0 | - | - | 0 | - | - | 0 | - | - | 0 | - |
| Peak Hour Factor | 85 | 85 | 85 | 85 | 85 | 85 | 85 | 85 | 85 | 85 | 85 | 85 |
| Heavy Vehicles, % | 0 | 0 | 0 | 0 | 0 | 0 | 0 | 3 | 33 | 0 | 5 | 0 |
| Mvmt Flow | 1 | 1 | 1 | 13 | 1 | 18 | 1 | 593 | 5 | 9 | 468 | 1 |

| Major/Minor | Minor2 | | | Minor1 | | | Major1 | | | Major2 | | |
|---|---|---|---|---|---|---|---|---|---|---|---|---|
| Conflicting Flow All | 1095 | 1089 | 470 | 1087 | 1087 | 597 | 470 | 0 | 0 | 599 | 0 | 0 |
| Stage 1 | 488 | 488 | - | 599 | 599 | - | - | - | - | - | - | - |
| Stage 2 | 607 | 601 | - | 488 | 488 | - | - | - | - | - | - | - |
| Critical Hdwy | 7.1 | 6.5 | 6.2 | 7.1 | 6.5 | 6.2 | 4.1 | - | - | 4.1 | - | - |
| Critical Hdwy Stg 1 | 6.1 | 5.5 | - | 6.1 | 5.5 | - | - | - | - | - | - | - |
| Critical Hdwy Stg 2 | 6.1 | 5.5 | - | 6.1 | 5.5 | - | - | - | - | - | - | - |
| Follow-up Hdwy | 3.5 | 4 | 3.3 | 3.5 | 4 | 3.3 | 2.2 | - | - | 2.2 | - | - |
| Pot Cap-1 Maneuver | 193 | 217 | 598 | 195 | 218 | 507 | 1102 | - | - | 988 | - | - |
| Stage 1 | 565 | 553 | - | 492 | 494 | - | - | - | - | - | - | - |
| Stage 2 | 487 | 493 | - | 565 | 553 | - | - | - | - | - | - | - |
| Platoon blocked, % | | | | | | | | - | - | | - | - |
| Mov Cap-1 Maneuver | 184 | 214 | 597 | 192 | 215 | 507 | 1101 | - | - | 987 | - | - |
| Mov Cap-2 Maneuver | 184 | 214 | - | 192 | 215 | - | - | - | - | - | - | - |
| Stage 1 | 564 | 547 | - | 491 | 493 | - | - | - | - | - | - | - |
| Stage 2 | 469 | 492 | - | 558 | 547 | - | - | - | - | - | - | - |

| Approach | EB | WB | NB | SB |
|---|---|---|---|---|
| HCM Control Delay, s | 19.3 | 18.7 | 0 | 0.2 |
| HCM LOS | C | C | | |

| Minor Lane/Major Mvmt | NBL | NBT | NBR | EBLn1 | WBLn1 | SBL | SBT | SBR |
|---|---|---|---|---|---|---|---|---|
| Capacity (veh/h) | 1101 | - | - | 255 | 295 | 987 | - | - |
| HCM Lane V/C Ratio | 0.001 | - | - | 0.014 | 0.108 | 0.01 | - | - |
| HCM Control Delay (s) | 8.3 | - | - | 19.3 | 18.7 | 8.7 | - | - |
| HCM Lane LOS | A | - | - | C | C | A | - | - |
| HCM 95th %tile Q(veh) | 0 | - | - | 0 | 0.4 | 0 | - | - |

| Intersection | |
|---|---|
| Int Delay, s/veh | 1.3 |

| Movement | EBL | EBT | EBR | WBL | WBT | WBR | NBL | NBT | NBR | SBL | SBT | SBR |
|---|---|---|---|---|---|---|---|---|---|---|---|---|
| Lane Configurations | | | | | | | | | | | | |
| Traffic Vol, veh/h | 12 | 1 | 24 | 8 | 1 | 3 | 21 | 491 | 11 | 4 | 377 | 19 |
| Future Vol, veh/h | 12 | 1 | 24 | 8 | 1 | 3 | 21 | 491 | 11 | 4 | 377 | 19 |
| Conflicting Peds, #/hr | 0 | 0 | 0 | 0 | 0 | 0 | 0 | 0 | 0 | 0 | 0 | 0 |
| Sign Control | Stop | Stop | Stop | Stop | Stop | Stop | Free | Free | Free | Free | Free | Free |
| RT Channelized | - | - | None | - | - | None | - | - | None | - | - | None |
| Storage Length | - | - | - | - | - | - | 220 | - | - | 150 | - | - |
| Veh in Median Storage, # | - | 0 | - | - | 0 | - | - | 0 | - | - | 0 | - |
| Grade, % | - | 0 | - | - | 0 | - | - | 0 | - | - | 0 | - |
| Peak Hour Factor | 85 | 85 | 85 | 85 | 85 | 85 | 85 | 85 | 85 | 85 | 85 | 85 |
| Heavy Vehicles, % | 44 | 0 | 32 | 0 | 0 | 0 | 25 | 2 | 10 | 0 | 3 | 62 |
| Mvmt Flow | 14 | 1 | 28 | 9 | 1 | 4 | 25 | 578 | 13 | 5 | 444 | 22 |

| Major/Minor | Minor2 | | | Minor1 | | | Major1 | | | Major2 | | |
|---|---|---|---|---|---|---|---|---|---|---|---|---|
| Conflicting Flow All | 1102 | 1106 | 455 | 1115 | 1111 | 585 | 466 | 0 | 0 | 591 | 0 | 0 |
| Stage 1 | 465 | 465 | - | 635 | 635 | - | - | - | - | - | - | - |
| Stage 2 | 637 | 641 | - | 480 | 476 | - | - | - | - | - | - | - |
| Critical Hdwy | 7.54 | 6.5 | 6.52 | 7.1 | 6.5 | 6.2 | 4.35 | - | - | 4.1 | - | - |
| Critical Hdwy Stg 1 | 6.54 | 5.5 | - | 6.1 | 5.5 | - | - | - | - | - | - | - |
| Critical Hdwy Stg 2 | 6.54 | 5.5 | - | 6.1 | 5.5 | - | - | - | - | - | - | - |
| Follow-up Hdwy | 3.896 | 4 | 3.588 | 3.5 | 4 | 3.3 | 2.425 | - | - | 2.2 | - | - |
| Pot Cap-1 Maneuver | 157 | 212 | 547 | 187 | 211 | 515 | 985 | - | - | 995 | - | - |
| Stage 1 | 505 | 566 | - | 470 | 476 | - | - | - | - | - | - | - |
| Stage 2 | 402 | 473 | - | 571 | 560 | - | - | - | - | - | - | - |
| Platoon blocked, % | | | | | | | | - | - | | - | - |
| Mov Cap-1 Maneuver | 152 | 206 | 547 | 172 | 205 | 515 | 985 | - | - | 995 | - | - |
| Mov Cap-2 Maneuver | 152 | 206 | - | 172 | 205 | - | - | - | - | - | - | - |
| Stage 1 | 492 | 563 | - | 458 | 464 | - | - | - | - | - | - | - |
| Stage 2 | 388 | 461 | - | 538 | 557 | - | - | - | - | - | - | - |

| Approach | EB | WB | NB | SB |
|---|---|---|---|---|
| HCM Control Delay, s | 19.6 | 23.4 | 0.4 | 0.1 |
| HCM LOS | C | C | | |

| Minor Lane/Major Mvmt | NBL | NBT | NBR | EBLn1 | WBLn1 | SBL | SBT | SBR |
|---|---|---|---|---|---|---|---|---|
| Capacity (veh/h) | 985 | - | - | 290 | 210 | 995 | - | - |
| HCM Lane V/C Ratio | 0.025 | - | - | 0.15 | 0.067 | 0.005 | - | - |
| HCM Control Delay (s) | 8.7 | - | - | 19.6 | 23.4 | 8.6 | - | - |
| HCM Lane LOS | A | - | - | C | C | A | - | - |
| HCM 95th %tile Q(veh) | 0.1 | - | - | 0.5 | 0.2 | 0 | - | - |

| Intersection | |
|---|---|
| Int Delay, s/veh | 2.9 |

| Movement | EBL | EBT | EBR | WBL | WBT | WBR | NBL | NBT | NBR | SBL | SBT | SBR |
|---|---|---|---|---|---|---|---|---|---|---|---|---|
| Lane Configurations | | | | | | | | | | | | |
| Traffic Vol, veh/h | 1 | 1 | 1 | 3 | 1 | 3 | 1 | 12 | 1 | 1 | 9 | 1 |
| Future Vol, veh/h | 1 | 1 | 1 | 3 | 1 | 3 | 1 | 12 | 1 | 1 | 9 | 1 |
| Conflicting Peds, #/hr | 1 | 0 | 1 | 1 | 0 | 1 | 1 | 0 | 0 | 0 | 0 | 1 |
| Sign Control | Stop | Stop | Stop | Stop | Stop | Stop | Free | Free | Free | Free | Free | Free |
| RT Channelized | - | - | None | - | - | None | - | - | None | - | - | None |
| Storage Length | - | - | - | - | - | - | - | - | - | - | - | - |
| Veh in Median Storage, # | - | 0 | - | - | 0 | - | - | 0 | - | - | 0 | - |
| Grade, % | - | 0 | - | - | 0 | - | - | 0 | - | - | 0 | - |
| Peak Hour Factor | 70 | 70 | 70 | 70 | 70 | 70 | 70 | 70 | 70 | 70 | 70 | 70 |
| Heavy Vehicles, % | 50 | 0 | 0 | 0 | 0 | 0 | 0 | 8 | 0 | 0 | 17 | 0 |
| Mvmt Flow | 1 | 1 | 1 | 4 | 1 | 4 | 1 | 17 | 1 | 1 | 13 | 1 |

| Major/Minor | Minor2 | | | Minor1 | | | Major1 | | | Major2 | | |
|---|---|---|---|---|---|---|---|---|---|---|---|---|
| Conflicting Flow All | 40 | 37 | 16 | 38 | 37 | 19 | 15 | 0 | 0 | 18 | 0 | 0 |
| Stage 1 | 17 | 17 | - | 20 | 20 | - | - | - | - | - | - | - |
| Stage 2 | 23 | 20 | - | 18 | 17 | - | - | - | - | - | - | - |
| Critical Hdwy | 7.6 | 6.5 | 6.2 | 7.1 | 6.5 | 6.2 | 4.1 | - | - | 4.1 | - | - |
| Critical Hdwy Stg 1 | 6.6 | 5.5 | - | 6.1 | 5.5 | - | - | - | - | - | - | - |
| Critical Hdwy Stg 2 | 6.6 | 5.5 | - | 6.1 | 5.5 | - | - | - | - | - | - | - |
| Follow-up Hdwy | 3.95 | 4 | 3.3 | 3.5 | 4 | 3.3 | 2.2 | - | - | 2.2 | - | - |
| Pot Cap-1 Maneuver | 856 | 859 | 1069 | 972 | 859 | 1065 | 1616 | - | - | 1612 | - | - |
| Stage 1 | 892 | 885 | - | 1004 | 883 | - | - | - | - | - | - | - |
| Stage 2 | 885 | 883 | - | 1006 | 885 | - | - | - | - | - | - | - |
| Platoon blocked, % | | | | | | | | - | - | | - | - |
| Mov Cap-1 Maneuver | 848 | 856 | 1067 | 967 | 856 | 1064 | 1614 | - | - | 1612 | - | - |
| Mov Cap-2 Maneuver | 848 | 856 | - | 967 | 856 | - | - | - | - | - | - | - |
| Stage 1 | 890 | 883 | - | 1003 | 882 | - | - | - | - | - | - | - |
| Stage 2 | 878 | 882 | - | 1001 | 883 | - | - | - | - | - | - | - |

| Approach | EB | WB | NB | SB |
|---|---|---|---|---|
| HCM Control Delay, s | 9 | 8.7 | 0.5 | 0.7 |
| HCM LOS | A | A | | |

| Minor Lane/Major Mvmt | NBL | NBT | NBR | EBLn1 | WBLn1 | SBL | SBT | SBR |
|---|---|---|---|---|---|---|---|---|
| Capacity (veh/h) | 1614 | - | - | 913 | 987 | 1612 | - | - |
| HCM Lane V/C Ratio | 0.001 | - | - | 0.005 | 0.01 | 0.001 | - | - |
| HCM Control Delay (s) | 7.2 | 0 | - | 9 | 8.7 | 7.2 | 0 | - |
| HCM Lane LOS | A | A | - | A | A | A | A | - |
| HCM 95th %tile Q(veh) | 0 | - | - | 0 | 0 | 0 | - | - |

| Intersection | |
|---|---|
| Int Delay, s/veh | 0.6 |

| Movement | EBL | EBT | WBT | WBR | SBL | SBR |
|---|---|---|---|---|---|---|
| Lane Configurations | | | | | | |
| Traffic Vol, veh/h | 1 | 16 | 34 | 1 | 1 | 2 |
| Future Vol, veh/h | 1 | 16 | 34 | 1 | 1 | 2 |
| Conflicting Peds, #/hr | 0 | 0 | 0 | 0 | 0 | 1 |
| Sign Control | Free | Free | Free | Free | Stop | Stop |
| RT Channelized | - | None | - | None | - | None |
| Storage Length | - | - | - | - | - | - |
| Veh in Median Storage, # | - | 0 | 0 | - | 0 | - |
| Grade, % | - | 0 | 0 | - | 0 | - |
| Peak Hour Factor | 73 | 73 | 73 | 73 | 73 | 73 |
| Heavy Vehicles, % | 0 | 0 | 0 | 0 | 0 | 0 |
| Mvmt Flow | 1 | 22 | 47 | 1 | 1 | 3 |

| Major/Minor | Major1 | | Major2 | | Minor2 | |
|---|---|---|---|---|---|---|
| Conflicting Flow All | 48 | 0 | - | 0 | 72 | 49 |
| Stage 1 | - | - | - | - | 48 | - |
| Stage 2 | - | - | - | - | 24 | - |
| Critical Hdwy | 4.1 | - | - | - | 6.4 | 6.2 |
| Critical Hdwy Stg 1 | - | - | - | - | 5.4 | - |
| Critical Hdwy Stg 2 | - | - | - | - | 5.4 | - |
| Follow-up Hdwy | 2.2 | - | - | - | 3.5 | 3.3 |
| Pot Cap-1 Maneuver | 1572 | - | - | - | 937 | 1025 |
| Stage 1 | - | - | - | - | 980 | - |
| Stage 2 | - | - | - | - | 1004 | - |
| Platoon blocked, % | | - | - | - | | |
| Mov Cap-1 Maneuver | 1572 | - | - | - | 936 | 1024 |
| Mov Cap-2 Maneuver | - | - | - | - | 936 | - |
| Stage 1 | - | - | - | - | 979 | - |
| Stage 2 | - | - | - | - | 1004 | - |

| Approach | EB | WB | SB |
|---|---|---|---|
| HCM Control Delay, s | 0.4 | 0 | 8.6 |
| HCM LOS | | | A |

| Minor Lane/Major Mvmt | EBL | EBT | WBT | WBR | SBLn1 |
|---|---|---|---|---|---|
| Capacity (veh/h) | 1572 | - | - | - | 993 |
| HCM Lane V/C Ratio | 0.001 | - | - | - | 0.004 |
| HCM Control Delay (s) | 7.3 | 0 | - | - | 8.6 |
| HCM Lane LOS | A | A | - | - | A |
| HCM 95th %tile Q(veh) | 0 | - | - | - | 0 |

| Movement | EBL | EBT | EBR | WBL | WBT | WBR | NBL | NBT | NBR | SBL | SBT | SBR |
|---|---|---|---|---|---|---|---|---|---|---|---|---|
| Lane Configurations | | | | | | | | | | | | |
| Traffic Volume (veh/h) | 74 | 6 | 13 | 10 | 7 | 29 | 14 | 518 | 6 | 36 | 631 | 26 |
| Future Volume (veh/h) | 74 | 6 | 13 | 10 | 7 | 29 | 14 | 518 | 6 | 36 | 631 | 26 |
| Initial Q (Qb), veh | 0 | 0 | 0 | 0 | 0 | 0 | 0 | 0 | 0 | 0 | 0 | 0 |
| Ped-Bike Adj(A_pbT) | 0.99 | | 0.99 | 0.97 | | 0.95 | 1.00 | | 0.98 | 1.00 | | 0.98 |
| Parking Bus, Adj | 1.00 | 1.00 | 1.00 | 1.00 | 1.00 | 1.00 | 1.00 | 1.00 | 1.00 | 1.00 | 1.00 | 1.00 |
| Work Zone On Approach | | No | | | No | | | No | | | No | |
| Adj Sat Flow, veh/h/ln | 1709 | 1750 | 1750 | 1750 | 1750 | 1709 | 1586 | 1723 | 1750 | 1750 | 1723 | 1750 |
| Adj Flow Rate, veh/h | 77 | 6 | 3 | 10 | 7 | 1 | 15 | 540 | 6 | 38 | 657 | 26 |
| Peak Hour Factor | 0.96 | 0.96 | 0.96 | 0.96 | 0.96 | 0.96 | 0.96 | 0.96 | 0.96 | 0.96 | 0.96 | 0.96 |
| Percent Heavy Veh, % | 3 | 0 | 0 | 0 | 0 | 3 | 12 | 2 | 0 | 0 | 2 | 0 |
| Cap, veh/h | 312 | 180 | 90 | 117 | 19 | 3 | 395 | 1011 | 11 | 536 | 1012 | 40 |
| Arrive On Green | 0.06 | 0.16 | 0.16 | 0.03 | 0.03 | 0.03 | 0.02 | 0.59 | 0.59 | 0.04 | 0.62 | 0.62 |
| Sat Flow, veh/h | 1628 | 1098 | 549 | 838 | 587 | 84 | 1511 | 1700 | 19 | 1667 | 1644 | 65 |
| Grp Volume(v), veh/h | 77 | 0 | 9 | 18 | 0 | 0 | 15 | 0 | 546 | 38 | 0 | 683 |
| Grp Sat Flow(s),veh/h/ln | 1628 | 0 | 1647 | 1509 | 0 | 0 | 1511 | 0 | 1719 | 1667 | 0 | 1709 |
| Q Serve(g_s), s | 2.7 | 0.0 | 0.3 | 0.7 | 0.0 | 0.0 | 0.2 | 0.0 | 11.7 | 0.5 | 0.0 | 15.8 |
| Cycle Q Clear(g_c), s | 2.7 | 0.0 | 0.3 | 0.7 | 0.0 | 0.0 | 0.2 | 0.0 | 11.7 | 0.5 | 0.0 | 15.8 |
| Prop In Lane | 1.00 | | 0.33 | 0.56 | | 0.06 | 1.00 | | 0.01 | 1.00 | | 0.04 |
| Lane Grp Cap(c), veh/h | 312 | 0 | 270 | 139 | 0 | 0 | 395 | 0 | 1023 | 536 | 0 | 1052 |
| V/C Ratio(X) | 0.25 | 0.00 | 0.03 | 0.13 | 0.00 | 0.00 | 0.04 | 0.00 | 0.53 | 0.07 | 0.00 | 0.65 |
| Avail Cap(c_a), veh/h | 350 | 0 | 682 | 481 | 0 | 0 | 492 | 0 | 1023 | 609 | 0 | 1052 |
| HCM Platoon Ratio | 1.00 | 1.00 | 1.00 | 1.00 | 1.00 | 1.00 | 1.00 | 1.00 | 1.00 | 1.00 | 1.00 | 1.00 |
| Upstream Filter(I) | 1.00 | 0.00 | 1.00 | 1.00 | 0.00 | 0.00 | 1.00 | 0.00 | 1.00 | 1.00 | 0.00 | 1.00 |
| Uniform Delay (d), s/veh | 24.9 | 0.0 | 21.7 | 29.3 | 0.0 | 0.0 | 6.4 | 0.0 | 7.4 | 5.4 | 0.0 | 7.6 |
| Incr Delay (d2), s/veh | 0.4 | 0.0 | 0.0 | 0.4 | 0.0 | 0.0 | 0.0 | 0.0 | 2.0 | 0.1 | 0.0 | 1.4 |
| Initial Q Delay(d3),s/veh | 0.0 | 0.0 | 0.0 | 0.0 | 0.0 | 0.0 | 0.0 | 0.0 | 0.0 | 0.0 | 0.0 | 0.0 |
| %ile BackOfQ(50%),veh/ln | 1.0 | 0.0 | 0.1 | 0.3 | 0.0 | 0.0 | 0.1 | 0.0 | 3.8 | 0.1 | 0.0 | 4.6 |
| Unsig. Movement Delay, s/veh | | | | | | | | | | | | |
| LnGrp Delay(d),s/veh | 25.3 | 0.0 | 21.8 | 29.7 | 0.0 | 0.0 | 6.5 | 0.0 | 9.4 | 5.4 | 0.0 | 9.0 |
| LnGrp LOS | C | A | C | C | A | A | A | A | A | A | A | A |
| Approach Vol, veh/h | | 86 | | | 18 | | | 561 | | | 721 | |
| Approach Delay, s/veh | | 25.0 | | | 29.7 | | | 9.4 | | | 8.8 | |
| Approach LOS | | C | | | C | | | A | | | A | |

| Timer - Assigned Phs | 1 | 2 | | 4 | 5 | 6 | 7 | 8 |
|---|---|---|---|---|---|---|---|---|
| Phs Duration (G+Y+Rc), s | 6.9 | 40.8 | | 14.2 | 5.6 | 42.1 | 8.2 | 6.0 |
| Change Period (Y+Rc), s | 4.5 | 4.0 | | 4.0 | 4.5 | 4.0 | 4.5 | 4.0 |
| Max Green Setting (Gmax), s | 5.1 | 36.8 | | 25.6 | 5.1 | 36.8 | 5.1 | 16.0 |
| Max Q Clear Time (g_c+I1), s | 2.5 | 13.7 | | 2.3 | 2.2 | 17.8 | 4.7 | 2.7 |
| Green Ext Time (p_c), s | 0.0 | 3.7 | | 0.0 | 0.0 | 4.7 | 0.0 | 0.0 |

| Intersection Summary | |
|---|---|
| HCM 6th Ctrl Delay | 10.3 |
| HCM 6th LOS | B |

| Intersection | |
|---|---|
| Int Delay, s/veh | 0.3 |

| Movement | EBL | EBT | EBR | WBL | WBT | WBR | NBL | NBT | NBR | SBL | SBT | SBR |
|---|---|---|---|---|---|---|---|---|---|---|---|---|
| Lane Configurations | | | | | | | | | | | | |
| Traffic Vol, veh/h | 1 | 1 | 1 | 2 | 1 | 7 | 1 | 524 | 6 | 5 | 613 | 1 |
| Future Vol, veh/h | 1 | 1 | 1 | 2 | 1 | 7 | 1 | 524 | 6 | 5 | 613 | 1 |
| Conflicting Peds, #/hr | 2 | 0 | 0 | 0 | 0 | 2 | 3 | 0 | 1 | 1 | 0 | 3 |
| Sign Control | Stop | Stop | Stop | Stop | Stop | Stop | Free | Free | Free | Free | Free | Free |
| RT Channelized | - | - | None | - | - | None | - | - | None | - | - | None |
| Storage Length | - | - | - | - | - | - | 150 | - | - | 150 | - | - |
| Veh in Median Storage, # | - | 0 | - | - | 0 | - | - | 0 | - | - | 0 | - |
| Grade, % | - | 0 | - | - | 0 | - | - | 0 | - | - | 0 | - |
| Peak Hour Factor | 87 | 87 | 87 | 87 | 87 | 87 | 87 | 87 | 87 | 87 | 87 | 87 |
| Heavy Vehicles, % | 0 | 0 | 0 | 0 | 0 | 0 | 0 | 3 | 0 | 0 | 3 | 0 |
| Mvmt Flow | 1 | 1 | 1 | 2 | 1 | 8 | 1 | 602 | 7 | 6 | 705 | 1 |

| Major/Minor | Minor2 | | | Minor1 | | | Major1 | | | Major2 | | |
|---|---|---|---|---|---|---|---|---|---|---|---|---|
| Conflicting Flow All | 1335 | 1333 | 709 | 1328 | 1330 | 609 | 709 | 0 | 0 | 610 | 0 | 0 |
| Stage 1 | 721 | 721 | - | 609 | 609 | - | - | - | - | - | - | - |
| Stage 2 | 614 | 612 | - | 719 | 721 | - | - | - | - | - | - | - |
| Critical Hdwy | 7.1 | 6.5 | 6.2 | 7.1 | 6.5 | 6.2 | 4.1 | - | - | 4.1 | - | - |
| Critical Hdwy Stg 1 | 6.1 | 5.5 | - | 6.1 | 5.5 | - | - | - | - | - | - | - |
| Critical Hdwy Stg 2 | 6.1 | 5.5 | - | 6.1 | 5.5 | - | - | - | - | - | - | - |
| Follow-up Hdwy | 3.5 | 4 | 3.3 | 3.5 | 4 | 3.3 | 2.2 | - | - | 2.2 | - | - |
| Pot Cap-1 Maneuver | 132 | 155 | 438 | 133 | 156 | 499 | 899 | - | - | 979 | - | - |
| Stage 1 | 422 | 435 | - | 486 | 488 | - | - | - | - | - | - | - |
| Stage 2 | 483 | 487 | - | 423 | 435 | - | - | - | - | - | - | - |
| Platoon blocked, % | | | | | | | | - | - | | - | - |
| Mov Cap-1 Maneuver | 128 | 153 | 437 | 131 | 154 | 498 | 896 | - | - | 978 | - | - |
| Mov Cap-2 Maneuver | 128 | 153 | - | 131 | 154 | - | - | - | - | - | - | - |
| Stage 1 | 420 | 431 | - | 485 | 487 | - | - | - | - | - | - | - |
| Stage 2 | 473 | 486 | - | 418 | 431 | - | - | - | - | - | - | - |

| Approach | EB | WB | NB | SB |
|---|---|---|---|---|
| HCM Control Delay, s | 25.4 | 18.5 | 0 | 0.1 |
| HCM LOS | D | C | | |

| Minor Lane/Major Mvmt | NBL | NBT | NBR | EBLn1 | WBLn1 | SBL | SBT | SBR |
|---|---|---|---|---|---|---|---|---|
| Capacity (veh/h) | 896 | - | - | 180 | 279 | 978 | - | - |
| HCM Lane V/C Ratio | 0.001 | - | - | 0.019 | 0.041 | 0.006 | - | - |
| HCM Control Delay (s) | 9 | - | - | 25.4 | 18.5 | 8.7 | - | - |
| HCM Lane LOS | A | - | - | D | C | A | - | - |
| HCM 95th %tile Q(veh) | 0 | - | - | 0.1 | 0.1 | 0 | - | - |

| Intersection | |
|---|---|
| Int Delay, s/veh | 1.5 |

| Movement | EBL | EBT | EBR | WBL | WBT | WBR | NBL | NBT | NBR | SBL | SBT | SBR |
|---|---|---|---|---|---|---|---|---|---|---|---|---|
| Lane Configurations | | | | | | | | | | | | |
| Traffic Vol, veh/h | 19 | 1 | 23 | 6 | 1 | 2 | 23 | 501 | 13 | 2 | 558 | 25 |
| Future Vol, veh/h | 19 | 1 | 23 | 6 | 1 | 2 | 23 | 501 | 13 | 2 | 558 | 25 |
| Conflicting Peds, #/hr | 0 | 0 | 0 | 0 | 0 | 0 | 0 | 0 | 0 | 0 | 0 | 0 |
| Sign Control | Stop | Stop | Stop | Stop | Stop | Stop | Free | Free | Free | Free | Free | Free |
| RT Channelized | - | - | None | - | - | None | - | - | None | - | - | None |
| Storage Length | - | - | - | - | - | - | 220 | - | - | 150 | - | - |
| Veh in Median Storage, # | - | 0 | - | - | 0 | - | - | 0 | - | - | 0 | - |
| Grade, % | - | 0 | - | - | 0 | - | - | 0 | - | - | 0 | - |
| Peak Hour Factor | 88 | 88 | 88 | 88 | 88 | 88 | 88 | 88 | 88 | 88 | 88 | 88 |
| Heavy Vehicles, % | 27 | 0 | 24 | 0 | 0 | 25 | 11 | 2 | 0 | 0 | 1 | 44 |
| Mvmt Flow | 22 | 1 | 26 | 7 | 1 | 2 | 26 | 569 | 15 | 2 | 634 | 28 |

| Major/Minor | Minor2 | | | Minor1 | | | Major1 | | | Major2 | | |
|---|---|---|---|---|---|---|---|---|---|---|---|---|
| Conflicting Flow All | 1282 | 1288 | 648 | 1295 | 1295 | 577 | 662 | 0 | 0 | 584 | 0 | 0 |
| Stage 1 | 652 | 652 | - | 629 | 629 | - | - | - | - | - | - | - |
| Stage 2 | 630 | 636 | - | 666 | 666 | - | - | - | - | - | - | - |
| Critical Hdwy | 7.37 | 6.5 | 6.44 | 7.1 | 6.5 | 6.45 | 4.21 | - | - | 4.1 | - | - |
| Critical Hdwy Stg 1 | 6.37 | 5.5 | - | 6.1 | 5.5 | - | - | - | - | - | - | - |
| Critical Hdwy Stg 2 | 6.37 | 5.5 | - | 6.1 | 5.5 | - | - | - | - | - | - | - |
| Follow-up Hdwy | 3.743 | 4 | 3.516 | 3.5 | 4 | 3.525 | 2.299 | - | - | 2.2 | - | - |
| Pot Cap-1 Maneuver | 126 | 165 | 434 | 141 | 164 | 475 | 885 | - | - | 1001 | - | - |
| Stage 1 | 418 | 467 | - | 474 | 478 | - | - | - | - | - | - | - |
| Stage 2 | 430 | 475 | - | 452 | 460 | - | - | - | - | - | - | - |
| Platoon blocked, % | | | | | | | | - | - | | - | - |
| Mov Cap-1 Maneuver | 122 | 160 | 434 | 129 | 159 | 475 | 885 | - | - | 1001 | - | - |
| Mov Cap-2 Maneuver | 122 | 160 | - | 129 | 159 | - | - | - | - | - | - | - |
| Stage 1 | 406 | 466 | - | 460 | 464 | - | - | - | - | - | - | - |
| Stage 2 | 414 | 461 | - | 423 | 459 | - | - | - | - | - | - | - |

| Approach | EB | WB | NB | SB |
|---|---|---|---|---|
| HCM Control Delay, s | 28.7 | 29.4 | 0.4 | 0 |
| HCM LOS | D | D | | |

| Minor Lane/Major Mvmt | NBL | NBT | NBR | EBLn1 | WBLn1 | SBL | SBT | SBR |
|---|---|---|---|---|---|---|---|---|
| Capacity (veh/h) | 885 | - | - | 200 | 158 | 1001 | - | - |
| HCM Lane V/C Ratio | 0.03 | - | - | 0.244 | 0.065 | 0.002 | - | - |
| HCM Control Delay (s) | 9.2 | - | - | 28.7 | 29.4 | 8.6 | - | - |
| HCM Lane LOS | A | - | - | D | D | A | - | - |
| HCM 95th %tile Q(veh) | 0.1 | - | - | 0.9 | 0.2 | 0 | - | - |

| Intersection | |
|---|---|
| Int Delay, s/veh | 3.5 |

| Movement | EBL | EBT | EBR | WBL | WBT | WBR | NBL | NBT | NBR | SBL | SBT | SBR |
|---|---|---|---|---|---|---|---|---|---|---|---|---|
| Lane Configurations | | | | | | | | | | | | |
| Traffic Vol, veh/h | 2 | 1 | 1 | 3 | 1 | 1 | 1 | 5 | 1 | 1 | 9 | 1 |
| Future Vol, veh/h | 2 | 1 | 1 | 3 | 1 | 1 | 1 | 5 | 1 | 1 | 9 | 1 |
| Conflicting Peds, #/hr | 0 | 0 | 1 | 1 | 0 | 0 | 4 | 0 | 0 | 0 | 0 | 4 |
| Sign Control | Stop | Stop | Stop | Stop | Stop | Stop | Free | Free | Free | Free | Free | Free |
| RT Channelized | - | - | None | - | - | None | - | - | None | - | - | None |
| Storage Length | - | - | - | - | - | - | - | - | - | - | - | - |
| Veh in Median Storage, # | - | 0 | - | - | 0 | - | - | 0 | - | - | 0 | - |
| Grade, % | - | 0 | - | - | 0 | - | - | 0 | - | - | 0 | - |
| Peak Hour Factor | 69 | 69 | 69 | 69 | 69 | 69 | 69 | 69 | 69 | 69 | 69 | 69 |
| Heavy Vehicles, % | 100 | 0 | 0 | 0 | 0 | 0 | 0 | 15 | 0 | 0 | 0 | 0 |
| Mvmt Flow | 3 | 1 | 1 | 4 | 1 | 1 | 1 | 7 | 1 | 1 | 13 | 1 |

| Major/Minor | Minor2 | | | Minor1 | | | Major1 | | | Major2 | | |
|---|---|---|---|---|---|---|---|---|---|---|---|---|
| Conflicting Flow All | 31 | 30 | 19 | 28 | 30 | 8 | 18 | 0 | 0 | 8 | 0 | 0 |
| Stage 1 | 20 | 20 | - | 10 | 10 | - | - | - | - | - | - | - |
| Stage 2 | 11 | 10 | - | 18 | 20 | - | - | - | - | - | - | - |
| Critical Hdwy | 8.1 | 6.5 | 6.2 | 7.1 | 6.5 | 6.2 | 4.1 | - | - | 4.1 | - | - |
| Critical Hdwy Stg 1 | 7.1 | 5.5 | - | 6.1 | 5.5 | - | - | - | - | - | - | - |
| Critical Hdwy Stg 2 | 7.1 | 5.5 | - | 6.1 | 5.5 | - | - | - | - | - | - | - |
| Follow-up Hdwy | 4.4 | 4 | 3.3 | 3.5 | 4 | 3.3 | 2.2 | - | - | 2.2 | - | - |
| Pot Cap-1 Maneuver | 778 | 867 | 1065 | 987 | 867 | 1080 | 1612 | - | - | 1625 | - | - |
| Stage 1 | 796 | 883 | - | 1016 | 891 | - | - | - | - | - | - | - |
| Stage 2 | 806 | 891 | - | 1006 | 883 | - | - | - | - | - | - | - |
| Platoon blocked, % | | | | | | | | - | - | | - | - |
| Mov Cap-1 Maneuver | 772 | 862 | 1060 | 982 | 862 | 1080 | 1606 | - | - | 1625 | - | - |
| Mov Cap-2 Maneuver | 772 | 862 | - | 982 | 862 | - | - | - | - | - | - | - |
| Stage 1 | 792 | 879 | - | 1015 | 890 | - | - | - | - | - | - | - |
| Stage 2 | 803 | 890 | - | 1001 | 879 | - | - | - | - | - | - | - |

| Approach | EB | WB | NB | SB |
|---|---|---|---|---|
| HCM Control Delay, s | 9.3 | 8.7 | 1 | 0.7 |
| HCM LOS | A | A | | |

| Minor Lane/Major Mvmt | NBL | NBT | NBR | EBLn1 | WBLn1 | SBL | SBT | SBR |
|---|---|---|---|---|---|---|---|---|
| Capacity (veh/h) | 1606 | - | - | 852 | 973 | 1625 | - | - |
| HCM Lane V/C Ratio | 0.001 | - | - | 0.007 | 0.007 | 0.001 | - | - |
| HCM Control Delay (s) | 7.2 | 0 | - | 9.3 | 8.7 | 7.2 | 0 | - |
| HCM Lane LOS | A | A | - | A | A | A | A | - |
| HCM 95th %tile Q(veh) | 0 | - | - | 0 | 0 | 0 | - | - |

| Intersection | |
|---|---|
| Int Delay, s/veh | 2 |

| Movement | EBL | EBT | WBT | WBR | SBL | SBR |
|---|---|---|---|---|---|---|
| Lane Configurations | | | | | | |
| Traffic Vol, veh/h | 4 | 19 | 16 | 2 | 4 | 4 |
| Future Vol, veh/h | 4 | 19 | 16 | 2 | 4 | 4 |
| Conflicting Peds, #/hr | 0 | 0 | 0 | 0 | 0 | 0 |
| Sign Control | Free | Free | Free | Free | Stop | Stop |
| RT Channelized | - | None | - | None | - | None |
| Storage Length | - | - | - | - | - | - |
| Veh in Median Storage, # | - | 0 | 0 | - | 0 | - |
| Grade, % | - | 0 | 0 | - | 0 | - |
| Peak Hour Factor | 68 | 68 | 68 | 68 | 68 | 68 |
| Heavy Vehicles, % | 0 | 0 | 0 | 0 | 0 | 0 |
| Mvmt Flow | 6 | 28 | 24 | 3 | 6 | 6 |

| Major/Minor | Major1 | | Major2 | | Minor2 | |
|---|---|---|---|---|---|---|
| Conflicting Flow All | 27 | 0 | - | 0 | 66 | 26 |
| Stage 1 | - | - | - | - | 26 | - |
| Stage 2 | - | - | - | - | 40 | - |
| Critical Hdwy | 4.1 | - | - | - | 6.4 | 6.2 |
| Critical Hdwy Stg 1 | - | - | - | - | 5.4 | - |
| Critical Hdwy Stg 2 | - | - | - | - | 5.4 | - |
| Follow-up Hdwy | 2.2 | - | - | - | 3.5 | 3.3 |
| Pot Cap-1 Maneuver | 1600 | - | - | - | 944 | 1056 |
| Stage 1 | - | - | - | - | 1002 | - |
| Stage 2 | - | - | - | - | 988 | - |
| Platoon blocked, % | | - | - | - | | |
| Mov Cap-1 Maneuver | 1600 | - | - | - | 940 | 1056 |
| Mov Cap-2 Maneuver | - | - | - | - | 940 | - |
| Stage 1 | - | - | - | - | 998 | - |
| Stage 2 | - | - | - | - | 988 | - |

| Approach | EB | WB | SB |
|---|---|---|---|
| HCM Control Delay, s | 1.3 | 0 | 8.7 |
| HCM LOS | | | A |

| Minor Lane/Major Mvmt | EBL | EBT | WBT | WBR | SBLn1 |
|---|---|---|---|---|---|
| Capacity (veh/h) | 1600 | - | - | - | 995 |
| HCM Lane V/C Ratio | 0.004 | - | - | - | 0.012 |
| HCM Control Delay (s) | 7.3 | 0 | - | - | 8.7 |
| HCM Lane LOS | A | A | - | - | A |
| HCM 95th %tile Q(veh) | 0 | - | - | - | 0 |

| Movement | EBL | EBT | EBR | WBL | WBT | WBR | NBL | NBT | NBR | SBL | SBT | SBR |
|---|---|---|---|---|---|---|---|---|---|---|---|---|
| Lane Configurations | | | | | | | | | | | | |
| Traffic Volume (veh/h) | 77 | 34 | 10 | 12 | 26 | 88 | 8 | 513 | 16 | 61 | 400 | 34 |
| Future Volume (veh/h) | 77 | 34 | 10 | 12 | 26 | 88 | 8 | 513 | 16 | 61 | 400 | 34 |
| Initial Q (Qb), veh | 0 | 0 | 0 | 0 | 0 | 0 | 0 | 0 | 0 | 0 | 0 | 0 |
| Ped-Bike Adj(A_pbT) | 1.00 | | 1.00 | 1.00 | | 1.00 | 1.00 | | 1.00 | 1.00 | | 1.00 |
| Parking Bus, Adj | 1.00 | 1.00 | 1.00 | 1.00 | 1.00 | 1.00 | 1.00 | 1.00 | 1.00 | 1.00 | 1.00 | 1.00 |
| Work Zone On Approach | | No | | | No | | | No | | | No | |
| Adj Sat Flow, veh/h/ln | 1723 | 1300 | 1750 | 1750 | 1750 | 1682 | 1750 | 1723 | 1627 | 1750 | 1695 | 1750 |
| Adj Flow Rate, veh/h | 88 | 39 | 1 | 14 | 30 | 28 | 9 | 583 | 16 | 69 | 455 | 36 |
| Peak Hour Factor | 0.88 | 0.88 | 0.88 | 0.88 | 0.88 | 0.88 | 0.88 | 0.88 | 0.88 | 0.88 | 0.88 | 0.88 |
| Percent Heavy Veh, % | 2 | 33 | 0 | 0 | 0 | 5 | 0 | 2 | 9 | 0 | 4 | 0 |
| Cap, veh/h | 393 | 277 | 7 | 96 | 50 | 42 | 472 | 821 | 23 | 414 | 837 | 66 |
| Arrive On Green | 0.07 | 0.22 | 0.22 | 0.07 | 0.07 | 0.07 | 0.01 | 0.49 | 0.49 | 0.06 | 0.54 | 0.54 |
| Sat Flow, veh/h | 1641 | 1261 | 32 | 245 | 718 | 613 | 1667 | 1669 | 46 | 1667 | 1550 | 123 |
| Grp Volume(v), veh/h | 88 | 0 | 40 | 72 | 0 | 0 | 9 | 0 | 599 | 69 | 0 | 491 |
| Grp Sat Flow(s),veh/h/ln | 1641 | 0 | 1294 | 1576 | 0 | 0 | 1667 | 0 | 1714 | 1667 | 0 | 1673 |
| Q Serve(g_s), s | 2.6 | 0.0 | 1.4 | 1.7 | 0.0 | 0.0 | 0.1 | 0.0 | 14.9 | 1.1 | 0.0 | 10.4 |
| Cycle Q Clear(g_c), s | 2.6 | 0.0 | 1.4 | 2.4 | 0.0 | 0.0 | 0.1 | 0.0 | 14.9 | 1.1 | 0.0 | 10.4 |
| Prop In Lane | 1.00 | | 0.03 | 0.19 | | 0.39 | 1.00 | | 0.03 | 1.00 | | 0.07 |
| Lane Grp Cap(c), veh/h | 393 | 0 | 284 | 188 | 0 | 0 | 472 | 0 | 843 | 414 | 0 | 903 |
| V/C Ratio(X) | 0.22 | 0.00 | 0.14 | 0.38 | 0.00 | 0.00 | 0.02 | 0.00 | 0.71 | 0.17 | 0.00 | 0.54 |
| Avail Cap(c_a), veh/h | 436 | 0 | 608 | 538 | 0 | 0 | 605 | 0 | 843 | 470 | 0 | 903 |
| HCM Platoon Ratio | 1.00 | 1.00 | 1.00 | 1.00 | 1.00 | 1.00 | 1.00 | 1.00 | 1.00 | 1.00 | 1.00 | 1.00 |
| Upstream Filter(I) | 1.00 | 0.00 | 1.00 | 1.00 | 0.00 | 0.00 | 1.00 | 0.00 | 1.00 | 1.00 | 0.00 | 1.00 |
| Uniform Delay (d), s/veh | 19.7 | 0.0 | 17.1 | 24.7 | 0.0 | 0.0 | 7.3 | 0.0 | 10.8 | 7.9 | 0.0 | 8.2 |
| Incr Delay (d2), s/veh | 0.3 | 0.0 | 0.2 | 1.3 | 0.0 | 0.0 | 0.0 | 0.0 | 5.0 | 0.2 | 0.0 | 0.7 |
| Initial Q Delay(d3),s/veh | 0.0 | 0.0 | 0.0 | 0.0 | 0.0 | 0.0 | 0.0 | 0.0 | 0.0 | 0.0 | 0.0 | 0.0 |
| %ile BackOfQ(50%),veh/ln | 0.9 | 0.0 | 0.4 | 0.9 | 0.0 | 0.0 | 0.0 | 0.0 | 5.6 | 0.3 | 0.0 | 3.0 |
| Unsig. Movement Delay, s/veh | | | | | | | | | | | | |
| LnGrp Delay(d),s/veh | 20.0 | 0.0 | 17.4 | 26.0 | 0.0 | 0.0 | 7.3 | 0.0 | 15.9 | 8.1 | 0.0 | 8.8 |
| LnGrp LOS | B | A | B | C | A | A | A | A | B | A | A | A |
| Approach Vol, veh/h | | 128 | | | 72 | | | 608 | | | 560 | |
| Approach Delay, s/veh | | 19.1 | | | 26.0 | | | 15.7 | | | 8.8 | |
| Approach LOS | | B | | | C | | | B | | | A | |

| Timer - Assigned Phs | 1 | 2 | | 4 | 5 | 6 | 7 | 8 |
|---|---|---|---|---|---|---|---|---|
| Phs Duration (G+Y+Rc), s | 7.7 | 30.8 | | 15.9 | 5.1 | 33.4 | 8.2 | 7.8 |
| Change Period (Y+Rc), s | 4.5 | 4.0 | | 4.0 | 4.5 | 4.0 | 4.5 | 4.0 |
| Max Green Setting (Gmax), s | 5.1 | 26.8 | | 25.6 | 5.0 | 26.9 | 5.1 | 16.0 |
| Max Q Clear Time (g_c+I1), s | 3.1 | 16.9 | | 3.4 | 2.1 | 12.4 | 4.6 | 4.4 |
| Green Ext Time (p_c), s | 0.0 | 2.8 | | 0.1 | 0.0 | 2.7 | 0.0 | 0.2 |

| Intersection Summary | |
|---|---|
| HCM 6th Ctrl Delay | 13.7 |
| HCM 6th LOS | B |

| Intersection | |
|---|---|
| Int Delay, s/veh | 1.5 |

| Movement | EBL | EBT | EBR | WBL | WBT | WBR | NBL | NBT | NBR | SBL | SBT | SBR |
|---|---|---|---|---|---|---|---|---|---|---|---|---|
| Lane Configurations | | | | | | | | | | | | |
| Traffic Vol, veh/h | 1 | 1 | 1 | 27 | 1 | 26 | 1 | 504 | 25 | 23 | 398 | 1 |
| Future Vol, veh/h | 1 | 1 | 1 | 27 | 1 | 26 | 1 | 504 | 25 | 23 | 398 | 1 |
| Conflicting Peds, #/hr | 0 | 0 | 0 | 0 | 0 | 0 | 1 | 0 | 1 | 1 | 0 | 1 |
| Sign Control | Stop | Stop | Stop | Stop | Stop | Stop | Free | Free | Free | Free | Free | Free |
| RT Channelized | - | - | None | - | - | None | - | - | None | - | - | None |
| Storage Length | - | - | - | - | - | - | 150 | - | - | 150 | - | - |
| Veh in Median Storage, # | - | 0 | - | - | 0 | - | - | 0 | - | - | 0 | - |
| Grade, % | - | 0 | - | - | 0 | - | - | 0 | - | - | 0 | - |
| Peak Hour Factor | 85 | 85 | 85 | 85 | 85 | 85 | 85 | 85 | 85 | 85 | 85 | 85 |
| Heavy Vehicles, % | 0 | 0 | 0 | 0 | 0 | 0 | 0 | 3 | 33 | 0 | 5 | 0 |
| Mvmt Flow | 1 | 1 | 1 | 32 | 1 | 31 | 1 | 593 | 29 | 27 | 468 | 1 |

| Major/Minor | Minor2 | | | Minor1 | | | Major1 | | | Major2 | | |
|---|---|---|---|---|---|---|---|---|---|---|---|---|
| Conflicting Flow All | 1150 | 1149 | 470 | 1135 | 1135 | 609 | 470 | 0 | 0 | 623 | 0 | 0 |
| Stage 1 | 524 | 524 | - | 611 | 611 | - | - | - | - | - | - | - |
| Stage 2 | 626 | 625 | - | 524 | 524 | - | - | - | - | - | - | - |
| Critical Hdwy | 7.1 | 6.5 | 6.2 | 7.1 | 6.5 | 6.2 | 4.1 | - | - | 4.1 | - | - |
| Critical Hdwy Stg 1 | 6.1 | 5.5 | - | 6.1 | 5.5 | - | - | - | - | - | - | - |
| Critical Hdwy Stg 2 | 6.1 | 5.5 | - | 6.1 | 5.5 | - | - | - | - | - | - | - |
| Follow-up Hdwy | 3.5 | 4 | 3.3 | 3.5 | 4 | 3.3 | 2.2 | - | - | 2.2 | - | - |
| Pot Cap-1 Maneuver | 177 | 200 | 598 | 181 | 204 | 499 | 1102 | - | - | 968 | - | - |
| Stage 1 | 540 | 533 | - | 484 | 487 | - | - | - | - | - | - | - |
| Stage 2 | 475 | 480 | - | 540 | 533 | - | - | - | - | - | - | - |
| Platoon blocked, % | | | | | | | | - | - | | - | - |
| Mov Cap-1 Maneuver | 162 | 194 | 597 | 176 | 198 | 499 | 1101 | - | - | 967 | - | - |
| Mov Cap-2 Maneuver | 162 | 194 | - | 176 | 198 | - | - | - | - | - | - | - |
| Stage 1 | 539 | 518 | - | 483 | 486 | - | - | - | - | - | - | - |
| Stage 2 | 444 | 479 | - | 523 | 518 | - | - | - | - | - | - | - |

| Approach | EB | WB | NB | SB |
|---|---|---|---|---|
| HCM Control Delay, s | 20.8 | 23.6 | 0 | 0.5 |
| HCM LOS | C | C | | |

| Minor Lane/Major Mvmt | NBL | NBT | NBR | EBLn1 | WBLn1 | SBL | SBT | SBR |
|---|---|---|---|---|---|---|---|---|
| Capacity (veh/h) | 1101 | - | - | 231 | 256 | 967 | - | - |
| HCM Lane V/C Ratio | 0.001 | - | - | 0.015 | 0.248 | 0.028 | - | - |
| HCM Control Delay (s) | 8.3 | - | - | 20.8 | 23.6 | 8.8 | - | - |
| HCM Lane LOS | A | - | - | C | C | A | - | - |
| HCM 95th %tile Q(veh) | 0 | - | - | 0 | 1 | 0.1 | - | - |

| Intersection | |
|---|---|
| Int Delay, s/veh | 1.8 |

| Movement | EBL | EBT | EBR | WBL | WBT | WBR | NBL | NBT | NBR | SBL | SBT | SBR |
|---|---|---|---|---|---|---|---|---|---|---|---|---|
| Lane Configurations | | | | | | | | | | | | |
| Traffic Vol, veh/h | 12 | 9 | 24 | 13 | 6 | 3 | 21 | 491 | 17 | 4 | 377 | 19 |
| Future Vol, veh/h | 12 | 9 | 24 | 13 | 6 | 3 | 21 | 491 | 17 | 4 | 377 | 19 |
| Conflicting Peds, #/hr | 0 | 0 | 0 | 0 | 0 | 0 | 0 | 0 | 0 | 0 | 0 | 0 |
| Sign Control | Stop | Stop | Stop | Stop | Stop | Stop | Free | Free | Free | Free | Free | Free |
| RT Channelized | - | - | None | - | - | None | - | - | None | - | - | None |
| Storage Length | - | - | - | - | - | - | 220 | - | - | 150 | - | - |
| Veh in Median Storage, # | - | 0 | - | - | 0 | - | - | 0 | - | - | 0 | - |
| Grade, % | - | 0 | - | - | 0 | - | - | 0 | - | - | 0 | - |
| Peak Hour Factor | 85 | 85 | 85 | 85 | 85 | 85 | 85 | 85 | 85 | 85 | 85 | 85 |
| Heavy Vehicles, % | 44 | 0 | 32 | 0 | 0 | 0 | 25 | 2 | 10 | 0 | 3 | 62 |
| Mvmt Flow | 14 | 11 | 28 | 15 | 7 | 4 | 25 | 578 | 20 | 5 | 444 | 22 |

| Major/Minor | Minor2 | | | Minor1 | | | Major1 | | | Major2 | | |
|---|---|---|---|---|---|---|---|---|---|---|---|---|
| Conflicting Flow All | 1109 | 1113 | 455 | 1123 | 1114 | 588 | 466 | 0 | 0 | 598 | 0 | 0 |
| Stage 1 | 465 | 465 | - | 638 | 638 | - | - | - | - | - | - | - |
| Stage 2 | 644 | 648 | - | 485 | 476 | - | - | - | - | - | - | - |
| Critical Hdwy | 7.54 | 6.5 | 6.52 | 7.1 | 6.5 | 6.2 | 4.35 | - | - | 4.1 | - | - |
| Critical Hdwy Stg 1 | 6.54 | 5.5 | - | 6.1 | 5.5 | - | - | - | - | - | - | - |
| Critical Hdwy Stg 2 | 6.54 | 5.5 | - | 6.1 | 5.5 | - | - | - | - | - | - | - |
| Follow-up Hdwy | 3.896 | 4 | 3.588 | 3.5 | 4 | 3.3 | 2.425 | - | - | 2.2 | - | - |
| Pot Cap-1 Maneuver | 156 | 210 | 547 | 185 | 210 | 513 | 985 | - | - | 989 | - | - |
| Stage 1 | 505 | 566 | - | 468 | 474 | - | - | - | - | - | - | - |
| Stage 2 | 398 | 469 | - | 567 | 560 | - | - | - | - | - | - | - |
| Platoon blocked, % | | | | | | | | - | - | | - | - |
| Mov Cap-1 Maneuver | 147 | 204 | 547 | 165 | 204 | 513 | 985 | - | - | 989 | - | - |
| Mov Cap-2 Maneuver | 147 | 204 | - | 165 | 204 | - | - | - | - | - | - | - |
| Stage 1 | 492 | 563 | - | 456 | 462 | - | - | - | - | - | - | - |
| Stage 2 | 379 | 457 | - | 525 | 557 | - | - | - | - | - | - | - |

| Approach | EB | WB | NB | SB |
|---|---|---|---|---|
| HCM Control Delay, s | 21.9 | 26.5 | 0.3 | 0.1 |
| HCM LOS | C | D | | |

| Minor Lane/Major Mvmt | NBL | NBT | NBR | EBLn1 | WBLn1 | SBL | SBT | SBR |
|---|---|---|---|---|---|---|---|---|
| Capacity (veh/h) | 985 | - | - | 265 | 193 | 989 | - | - |
| HCM Lane V/C Ratio | 0.025 | - | - | 0.2 | 0.134 | 0.005 | - | - |
| HCM Control Delay (s) | 8.7 | - | - | 21.9 | 26.5 | 8.7 | - | - |
| HCM Lane LOS | A | - | - | C | D | A | - | - |
| HCM 95th %tile Q(veh) | 0.1 | - | - | 0.7 | 0.5 | 0 | - | - |

| Intersection | |
|---|---|
| Int Delay, s/veh | 7.1 |

| Movement | EBL | EBT | EBR | WBL | WBT | WBR | NBL | NBT | NBR | SBL | SBT | SBR |
|---|---|---|---|---|---|---|---|---|---|---|---|---|
| Lane Configurations | | | | | | | | | | | | |
| Traffic Vol, veh/h | 1 | 7 | 1 | 46 | 6 | 77 | 1 | 12 | 58 | 79 | 9 | 1 |
| Future Vol, veh/h | 1 | 7 | 1 | 46 | 6 | 77 | 1 | 12 | 58 | 79 | 9 | 1 |
| Conflicting Peds, #/hr | 1 | 0 | 1 | 1 | 0 | 1 | 1 | 0 | 0 | 0 | 0 | 1 |
| Sign Control | Stop | Stop | Stop | Stop | Stop | Stop | Free | Free | Free | Free | Free | Free |
| RT Channelized | - | - | None | - | - | None | - | - | None | - | - | None |
| Storage Length | - | - | - | - | - | - | - | - | - | - | - | - |
| Veh in Median Storage, # | - | 0 | - | - | 0 | - | - | 0 | - | - | 0 | - |
| Grade, % | - | 0 | - | - | 0 | - | - | 0 | - | - | 0 | - |
| Peak Hour Factor | 70 | 70 | 70 | 70 | 70 | 70 | 70 | 70 | 70 | 70 | 70 | 70 |
| Heavy Vehicles, % | 50 | 0 | 0 | 0 | 0 | 0 | 0 | 8 | 0 | 0 | 17 | 0 |
| Mvmt Flow | 1 | 10 | 1 | 66 | 9 | 110 | 1 | 17 | 83 | 113 | 13 | 1 |

| Major/Minor | Minor2 | | | Minor1 | | | Major1 | | | Major2 | | |
|---|---|---|---|---|---|---|---|---|---|---|---|---|
| Conflicting Flow All | 362 | 343 | 16 | 307 | 302 | 60 | 15 | 0 | 0 | 100 | 0 | 0 |
| Stage 1 | 241 | 241 | - | 61 | 61 | - | - | - | - | - | - | - |
| Stage 2 | 121 | 102 | - | 246 | 241 | - | - | - | - | - | - | - |
| Critical Hdwy | 7.6 | 6.5 | 6.2 | 7.1 | 6.5 | 6.2 | 4.1 | - | - | 4.1 | - | - |
| Critical Hdwy Stg 1 | 6.6 | 5.5 | - | 6.1 | 5.5 | - | - | - | - | - | - | - |
| Critical Hdwy Stg 2 | 6.6 | 5.5 | - | 6.1 | 5.5 | - | - | - | - | - | - | - |
| Follow-up Hdwy | 3.95 | 4 | 3.3 | 3.5 | 4 | 3.3 | 2.2 | - | - | 2.2 | - | - |
| Pot Cap-1 Maneuver | 514 | 583 | 1069 | 649 | 614 | 1011 | 1616 | - | - | 1505 | - | - |
| Stage 1 | 667 | 710 | - | 955 | 848 | - | - | - | - | - | - | - |
| Stage 2 | 780 | 815 | - | 762 | 710 | - | - | - | - | - | - | - |
| Platoon blocked, % | | | | | | | | - | - | | - | - |
| Mov Cap-1 Maneuver | 426 | 538 | 1067 | 601 | 566 | 1010 | 1614 | - | - | 1505 | - | - |
| Mov Cap-2 Maneuver | 426 | 538 | - | 601 | 566 | - | - | - | - | - | - | - |
| Stage 1 | 666 | 655 | - | 954 | 847 | - | - | - | - | - | - | - |
| Stage 2 | 687 | 814 | - | 692 | 655 | - | - | - | - | - | - | - |

| Approach | EB | WB | NB | SB |
|---|---|---|---|---|
| HCM Control Delay, s | 11.7 | 10.9 | 0.1 | 6.7 |
| HCM LOS | B | B | | |

| Minor Lane/Major Mvmt | NBL | NBT | NBR | EBLn1 | WBLn1 | SBL | SBT | SBR |
|---|---|---|---|---|---|---|---|---|
| Capacity (veh/h) | 1614 | - | - | 552 | 790 | 1505 | - | - |
| HCM Lane V/C Ratio | 0.001 | - | - | 0.023 | 0.233 | 0.075 | - | - |
| HCM Control Delay (s) | 7.2 | 0 | - | 11.7 | 10.9 | 7.6 | 0 | - |
| HCM Lane LOS | A | A | - | B | B | A | A | - |
| HCM 95th %tile Q(veh) | 0 | - | - | 0.1 | 0.9 | 0.2 | - | - |

| Intersection | |
|---|---|
| Int Delay, s/veh | 0.2 |

| Movement | EBL | EBT | WBT | WBR | SBL | SBR |
|---|---|---|---|---|---|---|
| Lane Configurations | | | | | | |
| Traffic Vol, veh/h | 1 | 88 | 102 | 1 | 1 | 2 |
| Future Vol, veh/h | 1 | 88 | 102 | 1 | 1 | 2 |
| Conflicting Peds, #/hr | 0 | 0 | 0 | 0 | 0 | 1 |
| Sign Control | Free | Free | Free | Free | Stop | Stop |
| RT Channelized | - | None | - | None | - | None |
| Storage Length | - | - | - | - | - | - |
| Veh in Median Storage, # | - | 0 | 0 | - | 0 | - |
| Grade, % | - | 0 | 0 | - | 0 | - |
| Peak Hour Factor | 73 | 73 | 73 | 73 | 73 | 73 |
| Heavy Vehicles, % | 0 | 0 | 0 | 0 | 0 | 0 |
| Mvmt Flow | 1 | 121 | 140 | 1 | 1 | 3 |

| Major/Minor | Major1 | | Major2 | | Minor2 | |
|---|---|---|---|---|---|---|
| Conflicting Flow All | 141 | 0 | - | 0 | 264 | 142 |
| Stage 1 | - | - | - | - | 141 | - |
| Stage 2 | - | - | - | - | 123 | - |
| Critical Hdwy | 4.1 | - | - | - | 6.4 | 6.2 |
| Critical Hdwy Stg 1 | - | - | - | - | 5.4 | - |
| Critical Hdwy Stg 2 | - | - | - | - | 5.4 | - |
| Follow-up Hdwy | 2.2 | - | - | - | 3.5 | 3.3 |
| Pot Cap-1 Maneuver | 1455 | - | - | - | 729 | 911 |
| Stage 1 | - | - | - | - | 891 | - |
| Stage 2 | - | - | - | - | 907 | - |
| Platoon blocked, % | | - | - | - | | |
| Mov Cap-1 Maneuver | 1455 | - | - | - | 728 | 910 |
| Mov Cap-2 Maneuver | - | - | - | - | 728 | - |
| Stage 1 | - | - | - | - | 890 | - |
| Stage 2 | - | - | - | - | 907 | - |

| Approach | EB | WB | SB |
|---|---|---|---|
| HCM Control Delay, s | 0.1 | 0 | 9.3 |
| HCM LOS | | | A |

| Minor Lane/Major Mvmt | EBL | EBT | WBT | WBR | SBLn1 |
|---|---|---|---|---|---|
| Capacity (veh/h) | 1455 | - | - | - | 840 |
| HCM Lane V/C Ratio | 0.001 | - | - | - | 0.005 |
| HCM Control Delay (s) | 7.5 | 0 | - | - | 9.3 |
| HCM Lane LOS | A | A | - | - | A |
| HCM 95th %tile Q(veh) | 0 | - | - | - | 0 |

| Movement | EBL | EBT | EBR | WBL | WBT | WBR | NBL | NBT | NBR | SBL | SBT | SBR |
|---|---|---|---|---|---|---|---|---|---|---|---|---|
| Lane Configurations | | | | | | | | | | | | |
| Traffic Volume (veh/h) | 74 | 17 | 13 | 13 | 28 | 54 | 14 | 518 | 9 | 78 | 631 | 26 |
| Future Volume (veh/h) | 74 | 17 | 13 | 13 | 28 | 54 | 14 | 518 | 9 | 78 | 631 | 26 |
| Initial Q (Qb), veh | 0 | 0 | 0 | 0 | 0 | 0 | 0 | 0 | 0 | 0 | 0 | 0 |
| Ped-Bike Adj(A_pbT) | 0.99 | | 0.99 | 0.98 | | 0.95 | 1.00 | | 0.97 | 1.00 | | 0.98 |
| Parking Bus, Adj | 1.00 | 1.00 | 1.00 | 1.00 | 1.00 | 1.00 | 1.00 | 1.00 | 1.00 | 1.00 | 1.00 | 1.00 |
| Work Zone On Approach | | No | | | No | | | No | | | No | |
| Adj Sat Flow, veh/h/ln | 1709 | 1750 | 1750 | 1750 | 1750 | 1709 | 1586 | 1723 | 1750 | 1750 | 1723 | 1750 |
| Adj Flow Rate, veh/h | 77 | 18 | 3 | 14 | 29 | 17 | 15 | 540 | 8 | 81 | 657 | 26 |
| Peak Hour Factor | 0.96 | 0.96 | 0.96 | 0.96 | 0.96 | 0.96 | 0.96 | 0.96 | 0.96 | 0.96 | 0.96 | 0.96 |
| Percent Heavy Veh, % | 3 | 0 | 0 | 0 | 0 | 3 | 12 | 2 | 0 | 0 | 2 | 0 |
| Cap, veh/h | 332 | 274 | 46 | 86 | 51 | 27 | 375 | 952 | 14 | 520 | 992 | 39 |
| Arrive On Green | 0.06 | 0.19 | 0.19 | 0.06 | 0.06 | 0.06 | 0.02 | 0.56 | 0.56 | 0.06 | 0.60 | 0.60 |
| Sat Flow, veh/h | 1628 | 1461 | 244 | 292 | 832 | 444 | 1511 | 1692 | 25 | 1667 | 1644 | 65 |
| Grp Volume(v), veh/h | 77 | 0 | 21 | 60 | 0 | 0 | 15 | 0 | 548 | 81 | 0 | 683 |
| Grp Sat Flow(s),veh/h/ln | 1628 | 0 | 1705 | 1568 | 0 | 0 | 1511 | 0 | 1717 | 1667 | 0 | 1709 |
| Q Serve(g_s), s | 2.8 | 0.0 | 0.7 | 1.7 | 0.0 | 0.0 | 0.3 | 0.0 | 13.4 | 1.3 | 0.0 | 17.3 |
| Cycle Q Clear(g_c), s | 2.8 | 0.0 | 0.7 | 2.4 | 0.0 | 0.0 | 0.3 | 0.0 | 13.4 | 1.3 | 0.0 | 17.3 |
| Prop In Lane | 1.00 | | 0.14 | 0.23 | | 0.28 | 1.00 | | 0.01 | 1.00 | | 0.04 |
| Lane Grp Cap(c), veh/h | 332 | 0 | 319 | 163 | 0 | 0 | 375 | 0 | 966 | 520 | 0 | 1031 |
| V/C Ratio(X) | 0.23 | 0.00 | 0.07 | 0.37 | 0.00 | 0.00 | 0.04 | 0.00 | 0.57 | 0.16 | 0.00 | 0.66 |
| Avail Cap(c_a), veh/h | 365 | 0 | 667 | 448 | 0 | 0 | 465 | 0 | 966 | 552 | 0 | 1031 |
| HCM Platoon Ratio | 1.00 | 1.00 | 1.00 | 1.00 | 1.00 | 1.00 | 1.00 | 1.00 | 1.00 | 1.00 | 1.00 | 1.00 |
| Upstream Filter(I) | 1.00 | 0.00 | 1.00 | 1.00 | 0.00 | 0.00 | 1.00 | 0.00 | 1.00 | 1.00 | 0.00 | 1.00 |
| Uniform Delay (d), s/veh | 24.9 | 0.0 | 21.9 | 30.0 | 0.0 | 0.0 | 7.5 | 0.0 | 9.2 | 6.4 | 0.0 | 8.6 |
| Incr Delay (d2), s/veh | 0.4 | 0.0 | 0.1 | 1.4 | 0.0 | 0.0 | 0.0 | 0.0 | 2.4 | 0.1 | 0.0 | 1.6 |
| Initial Q Delay(d3),s/veh | 0.0 | 0.0 | 0.0 | 0.0 | 0.0 | 0.0 | 0.0 | 0.0 | 0.0 | 0.0 | 0.0 | 0.0 |
| %ile BackOfQ(50%),veh/ln | 1.0 | 0.0 | 0.3 | 0.9 | 0.0 | 0.0 | 0.1 | 0.0 | 4.7 | 0.4 | 0.0 | 5.4 |
| Unsig. Movement Delay, s/veh | | | | | | | | | | | | |
| LnGrp Delay(d),s/veh | 25.2 | 0.0 | 22.0 | 31.3 | 0.0 | 0.0 | 7.5 | 0.0 | 11.6 | 6.5 | 0.0 | 10.2 |
| LnGrp LOS | C | A | C | C | A | A | A | A | B | A | A | B |
| Approach Vol, veh/h | | 98 | | | 60 | | | 563 | | | 764 | |
| Approach Delay, s/veh | | 24.5 | | | 31.3 | | | 11.5 | | | 9.8 | |
| Approach LOS | | C | | | C | | | B | | | A | |

| Timer - Assigned Phs | 1 | 2 | | 4 | 5 | 6 | 7 | 8 |
|---|---|---|---|---|---|---|---|---|
| Phs Duration (G+Y+Rc), s | 8.4 | 40.8 | | 16.2 | 5.7 | 43.5 | 8.3 | 8.0 |
| Change Period (Y+Rc), s | 4.5 | 4.0 | | 4.0 | 4.5 | 4.0 | 4.5 | 4.0 |
| Max Green Setting (Gmax), s | 5.1 | 36.8 | | 25.6 | 5.1 | 36.8 | 5.1 | 16.0 |
| Max Q Clear Time (g_c+I1), s | 3.3 | 15.4 | | 2.7 | 2.3 | 19.3 | 4.8 | 4.4 |
| Green Ext Time (p_c), s | 0.0 | 3.6 | | 0.0 | 0.0 | 4.6 | 0.0 | 0.2 |

| Intersection Summary | |
|---|---|
| HCM 6th Ctrl Delay | 12.3 |
| HCM 6th LOS | B |

| Intersection | |
|---|---|
| Int Delay, s/veh | 0.9 |

| Movement | EBL | EBT | EBR | WBL | WBT | WBR | NBL | NBT | NBR | SBL | SBT | SBR |
|---|---|---|---|---|---|---|---|---|---|---|---|---|
| Lane Configurations | | | | | | | | | | | | |
| Traffic Vol, veh/h | 1 | 1 | 1 | 16 | 1 | 18 | 1 | 524 | 14 | 10 | 613 | 1 |
| Future Vol, veh/h | 1 | 1 | 1 | 16 | 1 | 18 | 1 | 524 | 14 | 10 | 613 | 1 |
| Conflicting Peds, #/hr | 2 | 0 | 0 | 0 | 0 | 2 | 3 | 0 | 1 | 1 | 0 | 3 |
| Sign Control | Stop | Stop | Stop | Stop | Stop | Stop | Free | Free | Free | Free | Free | Free |
| RT Channelized | - | - | None | - | - | None | - | - | None | - | - | None |
| Storage Length | - | - | - | - | - | - | 150 | - | - | 150 | - | - |
| Veh in Median Storage, # | - | 0 | - | - | 0 | - | - | 0 | - | - | 0 | - |
| Grade, % | - | 0 | - | - | 0 | - | - | 0 | - | - | 0 | - |
| Peak Hour Factor | 87 | 87 | 87 | 87 | 87 | 87 | 87 | 87 | 87 | 87 | 87 | 87 |
| Heavy Vehicles, % | 0 | 0 | 0 | 0 | 0 | 0 | 0 | 3 | 0 | 0 | 3 | 0 |
| Mvmt Flow | 1 | 1 | 1 | 18 | 1 | 21 | 1 | 602 | 16 | 11 | 705 | 1 |

| Major/Minor | Minor2 | | | Minor1 | | | Major1 | | | Major2 | | |
|---|---|---|---|---|---|---|---|---|---|---|---|---|
| Conflicting Flow All | 1356 | 1352 | 709 | 1342 | 1344 | 613 | 709 | 0 | 0 | 619 | 0 | 0 |
| Stage 1 | 731 | 731 | - | 613 | 613 | - | - | - | - | - | - | - |
| Stage 2 | 625 | 621 | - | 729 | 731 | - | - | - | - | - | - | - |
| Critical Hdwy | 7.1 | 6.5 | 6.2 | 7.1 | 6.5 | 6.2 | 4.1 | - | - | 4.1 | - | - |
| Critical Hdwy Stg 1 | 6.1 | 5.5 | - | 6.1 | 5.5 | - | - | - | - | - | - | - |
| Critical Hdwy Stg 2 | 6.1 | 5.5 | - | 6.1 | 5.5 | - | - | - | - | - | - | - |
| Follow-up Hdwy | 3.5 | 4 | 3.3 | 3.5 | 4 | 3.3 | 2.2 | - | - | 2.2 | - | - |
| Pot Cap-1 Maneuver | 128 | 151 | 438 | 131 | 153 | 496 | 899 | - | - | 971 | - | - |
| Stage 1 | 416 | 430 | - | 483 | 486 | - | - | - | - | - | - | - |
| Stage 2 | 476 | 482 | - | 417 | 430 | - | - | - | - | - | - | - |
| Platoon blocked, % | | | | | | | | - | - | | - | - |
| Mov Cap-1 Maneuver | 120 | 149 | 437 | 129 | 151 | 495 | 896 | - | - | 970 | - | - |
| Mov Cap-2 Maneuver | 120 | 149 | - | 129 | 151 | - | - | - | - | - | - | - |
| Stage 1 | 414 | 424 | - | 482 | 485 | - | - | - | - | - | - | - |
| Stage 2 | 454 | 481 | - | 410 | 424 | - | - | - | - | - | - | - |

| Approach | EB | WB | NB | SB |
|---|---|---|---|---|
| HCM Control Delay, s | 26.2 | 26.2 | 0 | 0.1 |
| HCM LOS | D | D | | |

| Minor Lane/Major Mvmt | NBL | NBT | NBR | EBLn1 | WBLn1 | SBL | SBT | SBR |
|---|---|---|---|---|---|---|---|---|
| Capacity (veh/h) | 896 | - | - | 173 | 210 | 970 | - | - |
| HCM Lane V/C Ratio | 0.001 | - | - | 0.02 | 0.192 | 0.012 | - | - |
| HCM Control Delay (s) | 9 | - | - | 26.2 | 26.2 | 8.8 | - | - |
| HCM Lane LOS | A | - | - | D | D | A | - | - |
| HCM 95th %tile Q(veh) | 0 | - | - | 0.1 | 0.7 | 0 | - | - |

| Intersection | |
|---|---|
| Int Delay, s/veh | 1.9 |

| Movement | EBL | EBT | EBR | WBL | WBT | WBR | NBL | NBT | NBR | SBL | SBT | SBR |
|---|---|---|---|---|---|---|---|---|---|---|---|---|
| Lane Configurations | | | | | | | | | | | | |
| Traffic Vol, veh/h | 19 | 4 | 23 | 9 | 8 | 2 | 23 | 501 | 16 | 2 | 558 | 25 |
| Future Vol, veh/h | 19 | 4 | 23 | 9 | 8 | 2 | 23 | 501 | 16 | 2 | 558 | 25 |
| Conflicting Peds, #/hr | 0 | 0 | 0 | 0 | 0 | 0 | 0 | 0 | 0 | 0 | 0 | 0 |
| Sign Control | Stop | Stop | Stop | Stop | Stop | Stop | Free | Free | Free | Free | Free | Free |
| RT Channelized | - | - | None | - | - | None | - | - | None | - | - | None |
| Storage Length | - | - | - | - | - | - | 220 | - | - | 150 | - | - |
| Veh in Median Storage, # | - | 0 | - | - | 0 | - | - | 0 | - | - | 0 | - |
| Grade, % | - | 0 | - | - | 0 | - | - | 0 | - | - | 0 | - |
| Peak Hour Factor | 88 | 88 | 88 | 88 | 88 | 88 | 88 | 88 | 88 | 88 | 88 | 88 |
| Heavy Vehicles, % | 27 | 0 | 24 | 0 | 0 | 25 | 11 | 2 | 0 | 0 | 1 | 44 |
| Mvmt Flow | 22 | 5 | 26 | 10 | 9 | 2 | 26 | 569 | 18 | 2 | 634 | 28 |

| Major/Minor | Minor2 | | | Minor1 | | | Major1 | | | Major2 | | |
|---|---|---|---|---|---|---|---|---|---|---|---|---|
| Conflicting Flow All | 1288 | 1291 | 648 | 1298 | 1296 | 578 | 662 | 0 | 0 | 587 | 0 | 0 |
| Stage 1 | 652 | 652 | - | 630 | 630 | - | - | - | - | - | - | - |
| Stage 2 | 636 | 639 | - | 668 | 666 | - | - | - | - | - | - | - |
| Critical Hdwy | 7.37 | 6.5 | 6.44 | 7.1 | 6.5 | 6.45 | 4.21 | - | - | 4.1 | - | - |
| Critical Hdwy Stg 1 | 6.37 | 5.5 | - | 6.1 | 5.5 | - | - | - | - | - | - | - |
| Critical Hdwy Stg 2 | 6.37 | 5.5 | - | 6.1 | 5.5 | - | - | - | - | - | - | - |
| Follow-up Hdwy | 3.743 | 4 | 3.516 | 3.5 | 4 | 3.525 | 2.299 | - | - | 2.2 | - | - |
| Pot Cap-1 Maneuver | 125 | 165 | 434 | 140 | 164 | 475 | 885 | - | - | 998 | - | - |
| Stage 1 | 418 | 467 | - | 473 | 478 | - | - | - | - | - | - | - |
| Stage 2 | 427 | 474 | - | 451 | 460 | - | - | - | - | - | - | - |
| Platoon blocked, % | | | | | | | | - | - | | - | - |
| Mov Cap-1 Maneuver | 116 | 160 | 434 | 126 | 159 | 475 | 885 | - | - | 998 | - | - |
| Mov Cap-2 Maneuver | 116 | 160 | - | 126 | 159 | - | - | - | - | - | - | - |
| Stage 1 | 406 | 466 | - | 459 | 464 | - | - | - | - | - | - | - |
| Stage 2 | 404 | 460 | - | 419 | 459 | - | - | - | - | - | - | - |

| Approach | EB | WB | NB | SB |
|---|---|---|---|---|
| HCM Control Delay, s | 31 | 32.8 | 0.4 | 0 |
| HCM LOS | D | D | | |

| Minor Lane/Major Mvmt | NBL | NBT | NBR | EBLn1 | WBLn1 | SBL | SBT | SBR |
|---|---|---|---|---|---|---|---|---|
| Capacity (veh/h) | 885 | - | - | 190 | 151 | 998 | - | - |
| HCM Lane V/C Ratio | 0.03 | - | - | 0.275 | 0.143 | 0.002 | - | - |
| HCM Control Delay (s) | 9.2 | - | - | 31 | 32.8 | 8.6 | - | - |
| HCM Lane LOS | A | - | - | D | D | A | - | - |
| HCM 95th %tile Q(veh) | 0.1 | - | - | 1.1 | 0.5 | 0 | - | - |

| Intersection | |
|---|---|
| Int Delay, s/veh | 7.1 |

| Movement | EBL | EBT | EBR | WBL | WBT | WBR | NBL | NBT | NBR | SBL | SBT | SBR |
|---|---|---|---|---|---|---|---|---|---|---|---|---|
| Lane Configurations | | | | | | | | | | | | |
| Traffic Vol, veh/h | 2 | 4 | 1 | 35 | 4 | 45 | 1 | 5 | 22 | 45 | 9 | 1 |
| Future Vol, veh/h | 2 | 4 | 1 | 35 | 4 | 45 | 1 | 5 | 22 | 45 | 9 | 1 |
| Conflicting Peds, #/hr | 0 | 0 | 1 | 1 | 0 | 0 | 4 | 0 | 0 | 0 | 0 | 4 |
| Sign Control | Stop | Stop | Stop | Stop | Stop | Stop | Free | Free | Free | Free | Free | Free |
| RT Channelized | - | - | None | - | - | None | - | - | None | - | - | None |
| Storage Length | - | - | - | - | - | - | - | - | - | - | - | - |
| Veh in Median Storage, # | - | 0 | - | - | 0 | - | - | 0 | - | - | 0 | - |
| Grade, % | - | 0 | - | - | 0 | - | - | 0 | - | - | 0 | - |
| Peak Hour Factor | 69 | 69 | 69 | 69 | 69 | 69 | 69 | 69 | 69 | 69 | 69 | 69 |
| Heavy Vehicles, % | 100 | 0 | 0 | 0 | 0 | 0 | 0 | 15 | 0 | 0 | 0 | 0 |
| Mvmt Flow | 3 | 6 | 1 | 51 | 6 | 65 | 1 | 7 | 32 | 65 | 13 | 1 |

| Major/Minor | Minor2 | | | Minor1 | | | Major1 | | | Major2 | | |
|---|---|---|---|---|---|---|---|---|---|---|---|---|
| Conflicting Flow All | 209 | 189 | 19 | 173 | 173 | 23 | 18 | 0 | 0 | 39 | 0 | 0 |
| Stage 1 | 148 | 148 | - | 25 | 25 | - | - | - | - | - | - | - |
| Stage 2 | 61 | 41 | - | 148 | 148 | - | - | - | - | - | - | - |
| Critical Hdwy | 8.1 | 6.5 | 6.2 | 7.1 | 6.5 | 6.2 | 4.1 | - | - | 4.1 | - | - |
| Critical Hdwy Stg 1 | 7.1 | 5.5 | - | 6.1 | 5.5 | - | - | - | - | - | - | - |
| Critical Hdwy Stg 2 | 7.1 | 5.5 | - | 6.1 | 5.5 | - | - | - | - | - | - | - |
| Follow-up Hdwy | 4.4 | 4 | 3.3 | 3.5 | 4 | 3.3 | 2.2 | - | - | 2.2 | - | - |
| Pot Cap-1 Maneuver | 579 | 709 | 1065 | 794 | 724 | 1060 | 1612 | - | - | 1584 | - | - |
| Stage 1 | 668 | 779 | - | 998 | 878 | - | - | - | - | - | - | - |
| Stage 2 | 753 | 865 | - | 859 | 779 | - | - | - | - | - | - | - |
| Platoon blocked, % | | | | | | | | - | - | | - | - |
| Mov Cap-1 Maneuver | 521 | 676 | 1060 | 761 | 691 | 1060 | 1606 | - | - | 1584 | - | - |
| Mov Cap-2 Maneuver | 521 | 676 | - | 761 | 691 | - | - | - | - | - | - | - |
| Stage 1 | 665 | 744 | - | 997 | 877 | - | - | - | - | - | - | - |
| Stage 2 | 701 | 864 | - | 815 | 744 | - | - | - | - | - | - | - |

| Approach | EB | WB | NB | SB |
|---|---|---|---|---|
| HCM Control Delay, s | 10.6 | 9.7 | 0.3 | 6 |
| HCM LOS | B | A | | |

| Minor Lane/Major Mvmt | NBL | NBT | NBR | EBLn1 | WBLn1 | SBL | SBT | SBR |
|---|---|---|---|---|---|---|---|---|
| Capacity (veh/h) | 1606 | - | - | 654 | 891 | 1584 | - | - |
| HCM Lane V/C Ratio | 0.001 | - | - | 0.016 | 0.137 | 0.041 | - | - |
| HCM Control Delay (s) | 7.2 | 0 | - | 10.6 | 9.7 | 7.4 | 0 | - |
| HCM Lane LOS | A | A | - | B | A | A | A | - |
| HCM 95th %tile Q(veh) | 0 | - | - | 0 | 0.5 | 0.1 | - | - |

| Intersection | |
|---|---|
| Int Delay, s/veh | 0.8 |

| Movement | EBL | EBT | WBT | WBR | SBL | SBR |
|---|---|---|---|---|---|---|
| Lane Configurations | | | | | | |
| Traffic Vol, veh/h | 4 | 61 | 57 | 2 | 4 | 4 |
| Future Vol, veh/h | 4 | 61 | 57 | 2 | 4 | 4 |
| Conflicting Peds, #/hr | 0 | 0 | 0 | 0 | 0 | 0 |
| Sign Control | Free | Free | Free | Free | Stop | Stop |
| RT Channelized | - | None | - | None | - | None |
| Storage Length | - | - | - | - | - | - |
| Veh in Median Storage, # | - | 0 | 0 | - | 0 | - |
| Grade, % | - | 0 | 0 | - | 0 | - |
| Peak Hour Factor | 68 | 68 | 68 | 68 | 68 | 68 |
| Heavy Vehicles, % | 0 | 0 | 0 | 0 | 0 | 0 |
| Mvmt Flow | 6 | 90 | 84 | 3 | 6 | 6 |

| Major/Minor | Major1 | | Major2 | | Minor2 | |
|---|---|---|---|---|---|---|
| Conflicting Flow All | 87 | 0 | - | 0 | 188 | 86 |
| Stage 1 | - | - | - | - | 86 | - |
| Stage 2 | - | - | - | - | 102 | - |
| Critical Hdwy | 4.1 | - | - | - | 6.4 | 6.2 |
| Critical Hdwy Stg 1 | - | - | - | - | 5.4 | - |
| Critical Hdwy Stg 2 | - | - | - | - | 5.4 | - |
| Follow-up Hdwy | 2.2 | - | - | - | 3.5 | 3.3 |
| Pot Cap-1 Maneuver | 1522 | - | - | - | 806 | 978 |
| Stage 1 | - | - | - | - | 942 | - |
| Stage 2 | - | - | - | - | 927 | - |
| Platoon blocked, % | | - | - | - | | |
| Mov Cap-1 Maneuver | 1522 | - | - | - | 803 | 978 |
| Mov Cap-2 Maneuver | - | - | - | - | 803 | - |
| Stage 1 | - | - | - | - | 938 | - |
| Stage 2 | - | - | - | - | 927 | - |

| Approach | EB | WB | SB |
|---|---|---|---|
| HCM Control Delay, s | 0.5 | 0 | 9.1 |
| HCM LOS | | | A |

| Minor Lane/Major Mvmt | EBL | EBT | WBT | WBR | SBLn1 |
|---|---|---|---|---|---|
| Capacity (veh/h) | 1522 | - | - | - | 882 |
| HCM Lane V/C Ratio | 0.004 | - | - | - | 0.013 |
| HCM Control Delay (s) | 7.4 | 0 | - | - | 9.1 |
| HCM Lane LOS | A | A | - | - | A |
| HCM 95th %tile Q(veh) | 0 | - | - | - | 0 |

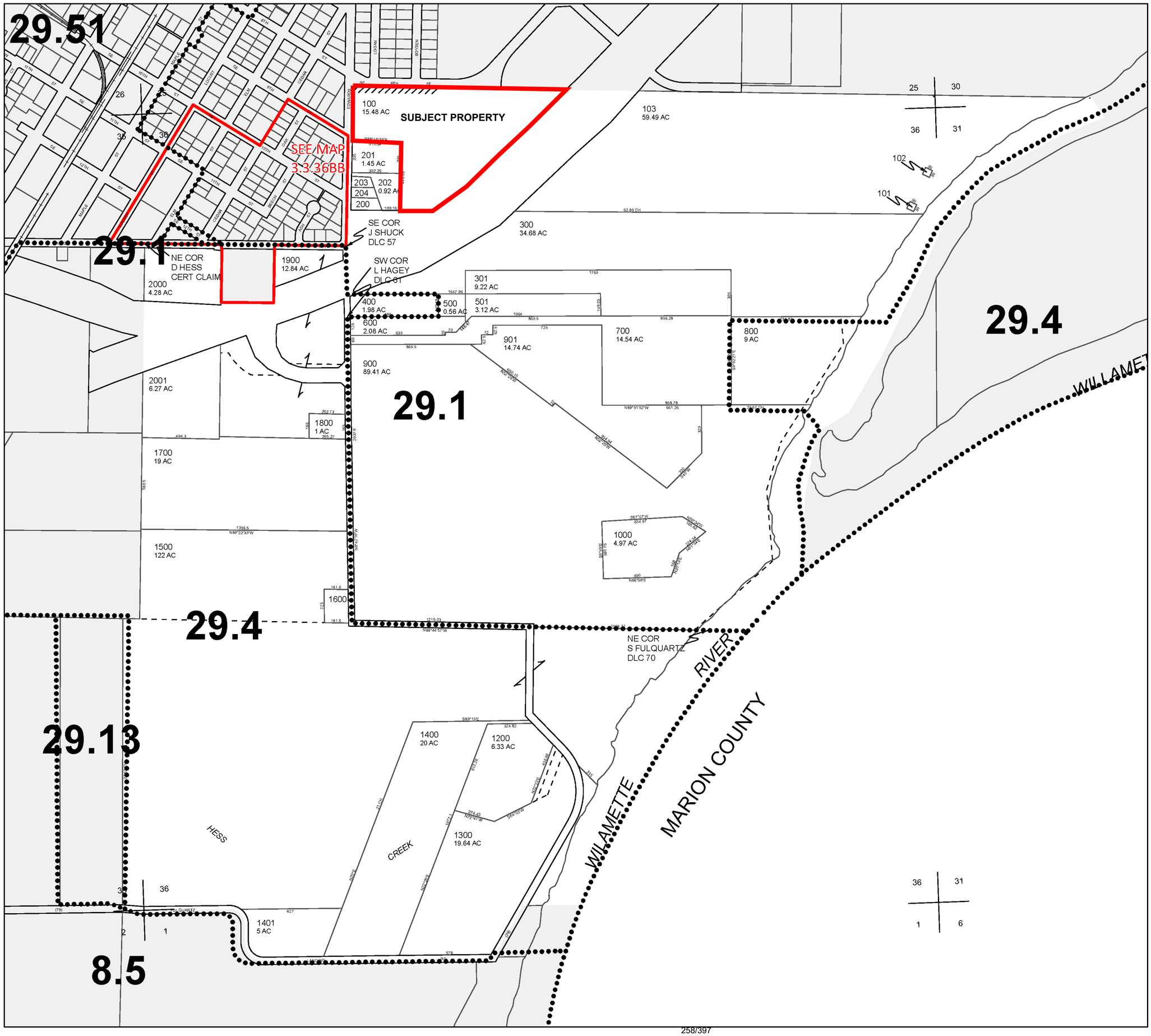


ASSESSMENT & TAX CARTOGRAPHY

SECTION 36 T.3S. R.3W. W.M.
YAMHILL COUNTY OREGON
1" = 400'

CANCELLED TAXLOTS:
1590
1100
601

DATE PRINTED: 11/19/2019

This product is for Assessment and Taxation (A&T) purposes only and has not been prepared or is suitable for legal, engineering, surveying or any purposes other than assessment and taxation.

Fidelity National Title Company of Oregon

# Fidelity National Title Company of Oregon

900 SW 5th Avenue, Portland, OR 97204
Phone: (503)222-2424 | Fax: (503)227-2274

## ESTIMATED BUYER'S STATEMENT

**Settlement Date:** December 15, 2021
**Disbursement Date:** December 15, 2021

**Escrow Number:** 45142120109
**Escrow Officer:** Lori Medak
**Email:** Lori.Medak@fnf.com

**Buyer:** County of Yamhill School District 29J
714 E. 6th Street
Newberg, OR 97132

**Seller:** Beutler Exchange Group as QI for Stuart H. Lindquist, Exchange No. 219903-KI
PO Box 42135
Portland, OR 97242

**Property:** Vacant Land
Dundee, OR 97115

| | | $ DEBITS | $ CREDITS |
|---|---|---|---|
| **FINANCIAL CONSIDERATION** | | | |
| Contract sales price | | 5,000,000.00 | |
| Earnest Money | Newberg Public Schools | | 50,000.00 |
| Bond funds wired to escrow | County of Yamhill School District 29J | | 3,415,500.00 |
| Donation credited toward Purchase Price by Stuart H. Lindquist | | | 1,628,460.00 |
| **PRORATIONS/ADJUSTMENTS** | | | |
| County taxes at $215.27 | 12/15/21 to 07/01/22 ($215.27 / 365 X 198 days) | 116.78 | |
| **TITLE & ESCROW CHARGES** | | | |
| Settlement or closing fee | Fidelity National Title Company of Oregon | 750.00 | |
| Recording Service Fee to Simplifile | Fidelity National Title Company of Oregon | 5.00 | |
| Estimated Recording Fee | Fidelity National Title Company of Oregon | 200.00 | |
| **Subtotals** | | 5,001,071.78 | 5,093,960.00 |
| **Balance Due TO Buyer** | | **92,888.22** | |
| **TOTALS** | | 5,093,960.00 | 5,093,960.00 |

I have carefully reviewed the Settlement Statement and to the best of my knowledge and belief, it is a true and accurate statement of all receipts and disbursements to be made on my account or by me in this transaction. I further certify that I have received a copy of the Settlement Statement.

BUYER:

County of Yamhill School District 29J
DocuSigned by:
BY: Nikki Fowler
Nikki Fowler
Director of Finance

To the best of my knowledge, the Settlement Statement which I have prepared is a true and accurate account of the funds which were received and have been or will be disbursed by the undersigned as part of the settlement of this transaction.

Fidelity National Title Company of Oregon
Settlement Agent

Fidelity National Title
Company of Oregon

# SALE ESCROW INSTRUCTIONS

Lori Medak, Senior Escrow Officer
Fidelity National Title Company of Oregon
900 SW 5th Avenue
Portland, OR 97204
Phone: (503)222-2424 Fax: (503)227-2274

**Date:** December 14, 2021
**Escrow No.:** 45142120109-LM
**Property:** Vacant Land
Dundee, OR 97115

Buyer hands you herewith collected funds pursuant to the closing statement approved by the undersigned buyer and:

- Balance of funds to close escrow in the form of a wire transfer or cashier's check payable to Fidelity National Title Company of Oregon pursuant to the "Deposit of Funds", Paragraph 1 contained in the General Provisions attached hereto and made a part hereof
- Approved copy of Preliminary Report
- Read and approved copy of the Statutory Warranty Deed

Which you are to use and/or deliver provided you can deliver for the account of the undersigned the following:

- Properly executed Deed

describing the real property as set forth in that certain preliminary title report issued by Fidelity National Title Company of Oregon No. 45142120109, dated October 7, 2021, which preliminary title report the undersigned has read and does hereby approve;

AND when you can cause to be issued an **Owner's Standard** coverage form Policy of Title Insurance from **Fidelity National Title Insurance Company** with a liability of **Five Million And No/100 Dollars ($5,000,000.00)** insuring the undersigned that title to the above referenced property:

**SHOWING TITLE VESTED IN**

County of Yamhill School District 29J

Subject to the usual printed exclusions and exceptions, current general and special taxes for the fiscal year in which this escrow closes, and taxes for the ensuing year, if any, a lien not yet due and payable, and exceptions numbered 1-5, 7-13 of the above referenced title report, and further subject to any new encumbrance recorded at closing.

Seller hands you herewith the following:

- Deed from Stuart H. Lindquist to County of Yamhill School District 29J
- 1099 Form
- Approved copy of Preliminary Report
- Department of Revenue Documents

describing the real property as set forth in that certain preliminary title report issued by Fidelity National Title Company of Oregon No. 45142120109, dated October 7, 2021, which preliminary title report the undersigned has read and does hereby approve;

which you can use when you hold for the account of the undersigned Seller funds pursuant to the closing statement approved by the undersigned; and:

Prorate the following as of recording of deed:

- Real Property Taxes

# SALE ESCROW INSTRUCTIONS
(continued)

**ADDITIONAL INSTRUCTIONS**

NONE

**GENERAL INSTRUCTIONS**

The General Provisions attached to these Instructions are part of these instructions.

Upon request, you are instructed to furnish any broker or lender identified with this transaction or anyone acting on behalf of such lender, any information concerning this escrow, copies of all instructions, amendments or statements.

All terms and provisions of the agreement between the parties, amendments or addendums thereto, have been complied with to the satisfaction of the undersigned parties or will be complied with outside this escrow.

**IT IS UNDERSTOOD BY THE PARTIES SIGNING THE ABOVE INSTRUCTIONS OR THOSE ESCROW INSTRUCTIONS WHICH ARE ATTACHED HERETO THAT SUCH INSTRUCTIONS CONSTITUTE THE WHOLE AGREEMENT BETWEEN THIS FIRM AS AN ESCROW AGENT AND YOU AS A PRINCIPAL TO THE ESCROW TRANSACTION. THESE INSTRUCTIONS MAY NOT INCLUDE ALL OF THE TERMS OF THE AGREEMENT WHICH IS THE SUBJECT OF THIS ESCROW. READ THESE INSTRUCTIONS CAREFULLY, AND DO NOT SIGN THEM UNLESS THEY ARE ACCEPTABLE TO YOU.**

IN WITNESS WHEREOF, the undersigned have executed this document on the date(s) set forth below.

REFUNDS after closing, if any:

☐ DEPOSIT (attach voided check or deposit slip OR see bank information on 'Disbursement of Proceeds/Wire Transfer Instructions')

**BUYER(S):**

County ~~of Yamhill~~ School District 29J

BY: Nikki Fowler 12/14/2021

Nikki Fowler
Director of Finance

Date

Forwarding Address:

Phone: _____

Email: _____

# SALE ESCROW INSTRUCTIONS
(continued)

REFUNDS after closing, if any:

☐ DEPOSIT (attach voided check or deposit slip OR see bank information on 'Disbursement of Proceeds/Wire Transfer Instructions')

**SELLER(S):**

Beutler Exchange Group as QI for Stuart H. Lindquist, Exchange No. 219903-KI _____ Date

BY: _____
Karen Inabnit, Sr. Exchange Officer

READ AND APPROVED BY EXCHANGER:

_____
Stuart H. Lindquist

Forwarding Address:

Phone: _____ _____

Email: _____ _____

**RECEIVED BY:**

Fidelity National Title Company of Oregon

By: JM _____ 12-14-21 _____
Lori Medak, Senior Escrow Officer Date

## GENERAL PROVISIONS

**1. DEPOSIT OF FUNDS**

The law dealing with the disbursement of funds requires that all funds be available for withdrawal as a matter of right by the title entity's escrow and/or sub escrow account prior to disbursement of any funds. Only cash or wire transferred funds can be given immediate availability upon deposit. Cashier's checks may be available one business day after deposit. All other funds such as personal, corporate or partnership checks and drafts are subject to mandatory holding periods which may cause material delays in disbursement of funds in this escrow. In order to avoid delays, all fundings should be wire transfer. Outgoing wire transfers will not be authorized until confirmation of the respective incoming wire transfer or of availability of deposited checks.

All funds received in this escrow shall be deposited with other escrow funds in a general escrow account or accounts of Fidelity National Title Company of Oregon, with any state or national bank, and may be transferred to any other such general escrow account or accounts. Said funds will not earn interest unless the instructions otherwise specifically state that funds shall be deposited in an interest-bearing account.

Escrow Holder receives indirect benefits including but not limited to checks, deposit slips, data processing and account service and waiving of certain fees from the depository bank where its non-interest bearing client trust accounts are maintained. Escrow Holder or its affiliates may also elect to enter into other business transactions with or obtain loans for investment or other purposes from the depository institution. These benefits are passed on to the escrow principals through lower escrow fees. Pursuant to OAR 863-50-065, a good faith estimate of the value of the benefit is Twenty-Four and 12/100 Dollars ($24.12) per escrow. By initialing below, we hereby acknowledge advisement of the disclosure.

NOTICE OF OPPORTUNITY. You have the opportunity to earn interest on your escrow funds by requesting Escrow Holder to set up an interest bearing account on your behalf. Escrow Agent will inform you of any fees it will charge to establish the account. Interest earned is dependent upon the amount of the deposit, the length of time of the deposit, and the prevailing interest rate.

All disbursements shall be made by check of Fidelity National Title Company of Oregon. The principals to this escrow are hereby notified that the funds deposited herein are insured only to the limit provided by the Federal Deposit Insurance Corporation. Any instruction for bank wire will provide reasonable time or notice for Escrow Holder's compliance with such instruction. Escrow Holder's sole duty and responsibility shall be to place said wire transfer instructions with its wiring bank upon confirmation of (1) satisfaction of conditions precedent or (2) document recordation at close of escrow. Escrow Holder will NOT be held responsible for lost interest due to wire delays caused by any bank or the Federal Reserve System, and recommends that all parties make themselves aware of banking regulations with regard to placement of wires.

In the event there is insufficient time to place a wire upon any such confirmation or the wires have closed for the day, the parties agree to provide written instructions for an alternative method of disbursement. WITHOUT AN ALTERNATIVE DISBURSEMENT INSTRUCTION, FUNDS WILL BE HELD IN TRUST IN A NON-INTEREST BEARING ACCOUNT UNTIL THE NEXT OPPORTUNITY FOR WIRE PLACEMENT.

If for any reason funds are retained or remain in escrow after closing date, Escrow Agent is authorized to deduct therefrom reasonable monthly charges as custodian thereof of one percent of the original balance but not less than Ten and No/100 Dollars ($10.00) per month. Funds deposited into this escrow are to be maintained in a federally insured trust account and any escrow related services provided to Escrow Agent by any depository bank or savings and loan association are hereby consented to and approved.

Unless specifically instructed otherwise in writing, mail all funds and instruments deliverable to the parties in favor of them to their address indicated below. At your discretion, you are authorized to receive and/or disburse any funds in connection with this escrow by electronic (wire) transfer.

The undersigned hereby authorize and instruct Escrow Holder to charge each party to the escrow for their respective Federal Express, special mail handling/courier and/or incoming/outgoing wire transfer fees. Unless specified in writing by the undersigned, Escrow Holder is authorized to select special mail/delivery or courier service to be used.

**2. PRORATIONS AND ADJUSTMENTS**

Make each proration on the basis of the actual number of days in the year covered by said item, annualizing monthly amounts. Tax prorations shall be based on the amount of the latest available tax statement (which may include reductions based on any deferral or exemption); during periods in which the current years tax figures are not available, you shall prorate taxes or assessments upon the immediate preceding year's figures, any further adjustment in actual taxes shall be handled between the parties outside of this escrow and Escrow Agent shall have no liability for the collection or payment thereof. If the parties herein have provided Escrow Agent with a rent schedule on the subject property, you shall prorate rents and charge seller and credit buyer with any deposits paid in advance pursuant to the rent schedule approved by the parties. Seller represents that they will collect all rents which fall due prior to the close of escrow. Make no adjustment against buyer for uncollected rent. Buyer acknowledges that the assessor's office customarily mails tax notices for the July 1 to June 30 tax year in October of the tax year and that Escrow Agent cannot guarantee that the tax assessor's office will address the tax bill to Buyer. Buyer accepts responsibility for contacting the assessor's office and obtaining a tax bill in a timely manner. Buyer acknowledges that a discount applies only if taxes are paid in full on or before November 15 of the tax year and that interest and billing charges may accrue after November 15.

**3. UTILITIES/POSSESSION**

Transfer, payment and adjustment of utilities and possession of the premises are to be settled by the parties directly and outside escrow.

**4. PREPARATION AND RECORDATION OF INSTRUMENTS**

Escrow Holder is authorized to prepare, obtain, record and deliver the necessary instruments to carry out the terms and conditions of this escrow and to order the policy of title insurance to be issued at close of escrow as called for in these instructions. Close of escrow shall mean the date instruments are recorded.

**5. AUTHORIZATION TO FURNISH COPIES**

You are authorized to furnish copies of these instructions, supplements, amendments, notices of cancellation and closing statements, to the Real Estate Broker(s) and Lender(s) named in this escrow.

# GENERAL PROVISIONS
(continued)

**6. RIGHT OF CANCELLATION**
Any principal instructing you to cancel this escrow shall file notice of cancellation in your office in writing. You shall, within two (2) working days thereafter, deliver, one copy of such notice to each of the other principals at the addresses stated in this escrow. If written objection is filed, you are authorized to institute an action in interpleader pursuant to provisions of paragraph number 9 contained herein.

**7. PERSONAL PROPERTY**
No examination, chattel or security interest search or insurance as to the amount or payment of personal property taxes is required unless specifically requested.

Bills of sale, if any required, are to be delivered unrecorded at the close of escrow. Escrow Agent shall have no responsibility or liability for the condition or delivery of any personal property being transferred herein.

By signing these General Provisions, the parties to the escrow hereby acknowledge that they are indemnifying the Escrow Holder against any and all matters relating to any "Bulk Sales" requirements, and instruct Escrow Holder to proceed with the closing of escrow without any consideration of matter of any nature whatsoever regarding "Bulk Sales" being handled through escrow.

**8. RIGHT OF RESIGNATION**
Escrow Holder has the right to resign upon ten (10) days written notice delivered to the principals herein. If such right is exercised, all funds and documents shall be returned to the party who deposited them and Escrow Holder shall have no liability hereunder.

**9. ACTION IN INTERPLEADER**
The principals hereto expressly agree that you, as Escrow Holder, have the absolute right at your election to file an action in interpleader requiring the principals to answer and litigate their several claims and rights among themselves and you are authorized to deposit with the clerk of the court all documents and funds held in this escrow. In the event such action is filed, the principals jointly and severally agree to pay your cancellation charges and costs, expenses and reasonable attorney's fees which you are required to expend or incur in such interpleader action, the amount thereof to be fixed and judgment therefor to be rendered by the court. Upon the filing of such action, you shall thereupon be fully released and discharged from all obligations imposed by the terms of this escrow or otherwise.

**10. TERMINATION OF AGENCY OBLIGATION**
These instructions shall be binding on the undersigned until the close of business thirty (30) days from date hereon and shall be performed within said period or thereafter until written demand by the undersigned is made upon you for the revocation hereof; provided however, that your agency as Escrow Holder will not extend beyond six (6) months from the date set forth herein. Any such written notices shall be effective upon receipt of such notice. This escrow may be terminated and all papers and monies returned to the parties only upon written instructions of both parties unless otherwise specified herein.

**11. SETTLEMENT STATEMENTS**
The parties hereto agree to pay all items as set forth on the approved Settlement Statements. It is understood that certain items therein may be estimated figures and are subject to adjustment.

**12. COLLECTION OF FEES**
Upon recordation and disbursement of documents and funds required herein, you are authorized to collect your fees earned as agreed to for your closing services. Parties agree to pay on demand, whether or not this escrow closes, any charges incurred by Escrow Holder on our behalf and its usual escrow fees and charges.

**13. DELIVERY/RECEIPT**
Delivery to principals as used in these instructions unless otherwise stated herein is to be by hand in person to the principal, regular mail, email or fax to any of the contact information provided in these instructions. If delivered by regular mail receipt is determined to be seventy-two (72) hours after such mailing. All documents, balances and statements due to the undersigned may be delivered to the contact information shown herein. All notices, change of instructions, communications and documents are to be delivered in writing to the office of Fidelity National Title Company of Oregon as set forth herein.

**14. STATE/FEDERAL CODE NOTIFICATIONS**
According to Federal Law, the Seller, when applicable, will be required to complete a sales activity report that will be utilized to generate a 1099 statement to the Internal Revenue Service.

The parties have satisfied themselves that the transaction covered by this escrow is not in violation of any planning or zoning law, and Escrow Agent is relieved of all liability in connection therewith, and is not concerned with the enforcement of said laws.

# GENERAL PROVISIONS
(continued)

**15. NON-RESIDENT ALIEN**
The Foreign Investment in Real Property Tax Act (FIRPTA), Title 26 U.S.C., Section 1445, and the regulations thereunder, when applicable, provide in part that a transferee (buyer) of a U.S. real property interest from a foreign person must withhold a statutory percentage of the amount realized on the disposition, report the transaction and remit the withholding to the Internal Revenue Service (IRS) within twenty (20) days after the transfer.

The following limitations on the escrow responsibilities of Escrow Holder apply, except to the extent that Escrow Holder is instructed to act, agrees to act and acts as a Qualified Substitute under FIRPTA or is instructed to act, agrees to act and acts as a transmitter of IRS forms and a withholding payment.

Escrow Holder will not determine, and will not aid in the determination of, whether the FIRPTA withholding provisions are applicable to the subject transaction. Escrow Holder will not furnish tax advice to any party to the transaction. Escrow Holder will not determine, and will not aid in the determination of, whether the transaction will qualify for a FIRPTA exception or exemption. Escrow Holder will not be responsible for the filing of any tax form with the IRS related to FIRPTA, and will not be responsible for collecting and holding any documentation from the buyer or seller on the buyer's behalf for the purpose of supporting a claim of an exception or exemption. Escrow Holder is not an agent for the buyer for the purposes of receiving and analyzing any evidence or documentation that the seller in the subject transaction is a U.S. citizen or resident alien. Escrow Holder is not responsible for the payment of this tax and/or any penalty and/or interest incurred in connection with FIRPTA, and such taxes are not a matter covered by the Owner's Policy of Title Insurance to be issued to the buyer. Escrow Holder is not responsible for the completion of any IRS document or form related to FIRPTA. The buyer is advised that (a) the buyer must independently make a determination of whether the contemplated transaction is subject to the withholding requirement; (b) the buyer bears full responsibility for compliance with the withholding requirement if applicable and for payment of any FIRPTA-related tax, interest, penalty or other expense that may be due on the subject transaction; (c) the buyer is responsible for the completion of any and all FIRPTA-related forms, including but not limited to applicable IRS documentation, and for the mailing of those forms; and (d) any FIRPTA-related form, document or information received from Escrow Holder is not tax or legal advice, should not be construed as such and should not be treated as a complete representation of FIRPTA requirements. Buyer should seek outside counsel from a qualified individual to determine any and all implications of FIRPTA and its regulations. The buyer's signature below is the buyer's acknowledgment of receiving this notice.

**16. ENVIRONMENTAL ISSUES**
Fidelity National Title Company of Oregon has made no investigation concerning said property as to environmental/toxic waste issues. Any due diligence required or needed to determine environmental impact as to forms of toxification, if applicable, will be done directly and by principals outside of escrow. Fidelity National Title Company of Oregon is released of any responsibility and/or liability in connection therewith.

**17. USURY**
Escrow Holder is not to be concerned with any questions of usury in any loan or encumbrance involved in the processing of this escrow and is hereby released of any responsibility or liability therefore.

**18. DISCLOSURE**
Escrow Holder's knowledge of matters affecting the property, provided such facts do not prevent compliance with these instructions, does not create any liability or duty in addition to these instructions.

**19. CLARIFICATION OF DUTIES**
Fidelity National Title Company of Oregon serves ONLY as an Escrow Holder in connection with these instructions and cannot give legal advice to any party hereto.

Escrow Holder is not to be held accountable or liable for the sufficiency or correctness as to form, manner of execution, or validity of any instrument deposited in this escrow, nor as to the identity, authority or rights of any person executing the same. Escrow Holder's duties hereunder shall be limited to the proper handling of such money and the proper safekeeping of such instruments, or other documents received by Escrow Holder, and for the disposition of same in accordance with the written instructions accepted by Escrow Holder.

The agency and duties of Escrow Holder commence only upon receipt of copies of these Escrow Instructions executed by all parties.

THIS AGREEMENT IN ALL PARTS APPLIES TO, INURES TO THE BENEFIT OF, AND BINDS ALL PARTIES HERETO, THEIR HEIRS, LEGATEES, DEVISEES, ADMINISTRATORS, EXECUTORS, SUCCESSORS AND ASSIGNS, AND WHENEVER THE CONTEXT SO REQUIRES THE MASCULINE GENDER INCLUDES THE FEMININE AND NEUTER, AND THE SINGULAR NUMBER INCLUDES THE PLURAL. THESE INSTRUCTIONS AND ANY OTHER AMENDMENTS MAY BE EXECUTED IN ANY NUMBER OF COUNTERPARTS, EACH OF WHICH SHALL BE CONSIDERED AS AN ORIGINAL AND BE EFFECTIVE AS SUCH.

MY SIGNATURE HERETO CONSTITUTES INSTRUCTION TO ESCROW HOLDER OF ALL TERMS AND CONDITIONS CONTAINED IN THIS AND ALL PRECEDING PAGES AND FURTHER SIGNIFIES THAT I HAVE READ AND UNDERSTAND THESE GENERAL PROVISIONS.

**IT IS UNDERSTOOD BY THE PARTIES SIGNING THE ABOVE INSTRUCTIONS OR THOSE ESCROW INSTRUCTIONS WHICH ARE ATTACHED HERETO THAT SUCH INSTRUCTIONS CONSTITUTE THE WHOLE AGREEMENT BETWEEN THIS FIRM AS AN ESCROW AGENT AND YOU AS A PRINCIPAL TO THE ESCROW TRANSACTION. THESE INSTRUCTIONS MAY NOT INCLUDE ALL OF THE TERMS OF THE AGREEMENT WHICH IS THE SUBJECT OF THIS ESCROW. READ THESE INSTRUCTIONS CAREFULLY, AND DO NOT SIGN THEM UNLESS THEY ARE ACCEPTABLE TO YOU.**

# GENERAL PROVISIONS
(continued)

**END OF INSTRUCTIONS**

IN WITNESS WHEREOF, the undersigned have executed this document on the date(s) set forth below.

**BUYER(S):**

County of Yamhill School District 29J

BY: DocuSigned by: Nikki Fowler 680D8B7DBB9F47F... 12/14/2021
Nikki Fowler — Date
Director of Finance

**SELLER(S):**

Beutler Exchange Group as QI for Stuart H. Lindquist, Exchange No. 219903-KI — Date

BY: _____
Karen Inabnit, Sr. Exchange Officer

READ AND APPROVED BY EXCHANGER:

_____
Stuart H. Lindquist

**RECEIVED BY:**
Fidelity National Title Company of Oregon

By: JM — 12-14-21
Lori Medak, Senior Escrow Officer — Date

Fidelity National Title
Company of Oregon

# PRELIMINARY REPORT APPROVAL

Lori Medak, Senior Escrow Officer
Fidelity National Title Company of Oregon
900 SW 5th Avenue
Portland, OR 97204
Phone: (503)222-2424 Fax: (503)227-2274

**Date:** December 14, 2021
**Escrow No.:** 45142120109-LM
**Property:** Vacant Land
Dundee, OR 97115

I have read the Preliminary Report dated October 7, 2021 covering the property described in your above numbered escrow, and approve the Policy of Title Insurance to be issued to me as required by my instructions to include as encumbrances therein General Exception No(s). 1-5 and Specific Item and Exception No(s). 7-13 of said report, in addition to those specific items described in my escrow instructions or created by me. I know of no other matters pertaining to the condition of title other than stated in this report. Further, we approve the legal description as being the property which is the subject of this escrow.

I hereby acknowledge receipt of a copy of said Preliminary Report.

In addition to the above, the undersigned hereby approve the legal description shown in said report and authorize the use of said description on all documents in this transaction.

**IT IS UNDERSTOOD BY THE PARTIES SIGNING THE ABOVE INSTRUCTIONS OR THOSE ESCROW INSTRUCTIONS WHICH ARE ATTACHED HERETO THAT SUCH INSTRUCTIONS CONSTITUTE THE WHOLE AGREEMENT BETWEEN THIS FIRM AS AN ESCROW AGENT AND YOU AS A PRINCIPAL TO THE ESCROW TRANSACTION. THESE INSTRUCTIONS MAY NOT INCLUDE ALL OF THE TERMS OF THE AGREEMENT WHICH IS THE SUBJECT OF THIS ESCROW. READ THESE INSTRUCTIONS CAREFULLY, AND DO NOT SIGN THEM UNLESS THEY ARE ACCEPTABLE TO YOU.**

IN WITNESS WHEREOF, the undersigned have executed this document on the date(s) set forth below.

**BUYER(S):**

County of Yamhill School District 29J

BY: Nikki Fowler
Nikki Fowler
Director of Finance

12/14/2021
Date

Fidelity National Title Company of Oregon

By: _____
Lori Medak, Senior Escrow Officer

12-14-21
Date

DocuSign Envelope ID: 2EACC8B7-CF60-41BE-BEE5-FE311335ECC6

Fidelity National Title
Company of Oregon

900 SW 5th Avenue, Portland, OR 97204
(503)222-2424 FAX (503)227-2274

# PRELIMINARY REPORT

**ESCROW OFFICER:** Lori Medak
Lori.Medak@fnf.com
503-222-2424

**ORDER NO.:** 45142120109
**Supplement** 1: Eff Date/Taxes/City Lien search

**TITLE OFFICER:** Deborah Clark

**TO:** Fidelity National Title Company of Oregon
900 SW 5th Avenue
Portland, OR 97204

**ESCROW LICENSE NO.:** 901000243
**OWNER/SELLER:** Stuart H. Lindquist
**BUYER/BORROWER:** Newberg School District 29J, and/or assigns
**PROPERTY ADDRESS:** Vacant Land, Dundee, OR 97115

**EFFECTIVE DATE: October 7, 2021, 08:00 AM**

1. THE POLICY AND ENDORSEMENTS TO BE ISSUED AND THE RELATED CHARGES ARE:

| | AMOUNT | PREMIUM |
|---|---|---|
| ALTA Owner's Policy 2006<br>**Owner's Standard** | $ 4,652,725.00 | $ 7,580.00 |
| Government Lien Search | | $ 20.00 |

2. THE ESTATE OR INTEREST IN THE LAND HEREINAFTER DESCRIBED OR REFERRED TO COVERED BY THIS REPORT IS:

   A Fee

3. TITLE TO SAID ESTATE OR INTEREST AT THE DATE HEREOF IS VESTED IN:

   Stuart H. Lindquist

4. THE LAND REFERRED TO IN THIS REPORT IS SITUATED IN THE COUNTY OF YAMHILL, STATE OF OREGON, AND IS DESCRIBED AS FOLLOWS:

   SEE EXHIBIT "A" ATTACHED HERETO AND MADE A PART HEREOF

# EXHIBIT "A"
## Legal Description

Being a part of the Levi Hagey Donation Land Claim, Notification No. 1434, Claim No. 61 in Township 3 South, Range 2 West of the Willamette Meridian, in Yamhill County, Oregon, said part being more particularly described and bounded as follows, to-wit:

Beginning at a post set in the Southwest corner of said Donation Land Claim; and running thence North along the fence line, 10.71 chains to a post at the Northwest corner of that tract conveyed to John Parret et ux., by Deed recorded in Book K, Page 629, Deed Records of Yamhill County, Oregon, which said last name post and corner is the starting point of the tract herein described as is the Southwest corner of the tract described herein; running thence North along the fence line to a post set in the corner of the fence at a point 53.641 chains South of the Northwest corner of said Donation Land Claim, which point is the Southwest corner of Parcel 1, described in Deed recorded July 10, 1963 in Deed and Mortgage Film Volume 31, Page 392, Yamhill County Deed Records, to Clara H. Robertson; running thence East 79.78 chains, more or less, to the most Northeasterly corner of the tract herein described and the Southeast corner of said Robertson tract; thence running Southwesterly 73°, 5.46-1/3 chains; thence South 74° West 2.5 chains; thence South 51°30' West, 10.5 chains; thence South 53° West 2.31 chains to the Northeast corner of said John Parrett tract; thence West along line of fence, 62.86 chains, more or less, to the Point of Beginning.

SAVE AND EXCEPTING THEREFROM the following described tract of land:

Beginning at an iron rod set in the South fence line of the Lile tract as described in Book 163, Page 648, Deed Records, Yamhill County, Oregon, said point being North 00°37'20" East, 715.92 feet from the Southwest corner of said Levi Hagey Donation Land Claim, said point also being in the East line of County Road No. 79; thence East along said South fence line, 320.27 feet; thence North 00°28'55" West, 448.83 feet; thence North 89°10'30" West, 315.04 feet to an iron rod set at a fence corner post in the East line of County Road No. 79; thence South 00°11'20" West, 453.34 feet to the Point of Beginning.

FURTHER SAVE AND EXCEPTING THEREFROM those portions described in Stipulated General Judgment entered in the Circuit Court of the State of Oregon for the County of Yamhill in Case No. 13CV03477, State of Oregon, by and through its Department of Transportation vs. Stuart H. Lindquist et al. and recorded on March 10, 2016, as Instrument No. 201603533, Deed and Mortgage Records of Yamhill County, Oregon.

FURTHER SAVE AND EXCEPTING THEREFROM that portion lying East of the centerline of those portions described in Stipulated General Judgment entered in the Circuit Court of the State of Oregon for the County of Yamhill in Case No. 13CV03477, State of Oregon, by and through its Department of Transportation vs. Stuart H. Lindquist et al. and recorded on March 10, 2016, as Instrument No. 201603533, Deed and Mortgage Records of Yamhill County, Oregon.

**AS OF THE DATE OF THIS REPORT, ITEMS TO BE CONSIDERED AND EXCEPTIONS TO COVERAGE IN ADDITION TO THE PRINTED EXCEPTIONS AND EXCLUSIONS IN THE POLICY FORM WOULD BE AS FOLLOWS:**

**GENERAL EXCEPTIONS:**

1. Taxes or assessments which are not shown as existing liens by the records of any taxing authority that levies taxes or assessments on real property or by the Public Records; proceedings by a public agency which may result in taxes or assessments, or notices of such proceedings, whether or not shown by the records of such agency or by the Public Records.

2. Any facts, rights, interests or claims, which are not shown by the Public Records but which could be ascertained by an inspection of the Land or by making inquiry of persons in possession thereof.

3. Easements, or claims of easement, which are not shown by the Public Records; reservations or exceptions in patents or in Acts authorizing the issuance thereof; water rights, claims or title to water.

4. Any encroachment (of existing improvements located on the Land onto adjoining land or of existing improvements located on adjoining land onto the subject Land), encumbrance, violation, variation or adverse circumstance affecting the Title that would be disclosed by an accurate and complete land survey of the subject Land.

5. Any lien or right to a lien for services, labor, material, equipment rental or workers compensation heretofore or hereafter furnished, imposed by law and not shown by the Public Records.

SPECIFIC ITEMS AND EXCEPTIONS:

~~6.~~ Unpaid Property Taxes are as follows:

| | |
|---|---|
| Fiscal Year: | 2021-2022 |
| Amount: | $215.27, plus interest, if any |
| Levy Code: | 29.1 |
| Account No.: | 82984 |
| Map No.: | R3336 00100 |

Prior to close of escrow, please contact the Tax Collector's Office to confirm all amounts owing, including current fiscal year taxes, supplemental taxes, escaped assessments and any delinquencies.

current

7. City Liens, if any, in favor of the City of Dundee. None found as of October 11, 2021.

8. Rights of the public to any portion of the Land lying within the area commonly known as streets, roads and highways.

9. The Land has been classified as Farm land, as disclosed by the tax roll. If the Land becomes disqualified, said Land may be subject to additional taxes and/or penalties.

10. Easement(s) for the purpose(s) shown below and rights incidental thereto, as granted in a document:

| | |
|---|---|
| Granted to: | City of Dundee |
| Purpose: | Public Drainage |
| Recording Date: | April 8, 1983 |
| Recording No: | Film Volume 176, Page 782 |
| Affects: | Reference is hereby made to said document for full particulars |

11. Easement(s) for the purpose(s) shown below and rights incidental thereto, as granted in a document:

| | |
|---|---|
| Granted to: | Portland General Electric Company, an Oregon corporation |
| Purpose: | Electric power lines and signal or communications lines |
| Recording Date: | August 27, 2013 |
| Recording No: | 201313749 |
| Affects: | Reference is hereby made to said document for full particulars |

12. Easement(s) for the purpose(s) shown below and rights incidental thereto as condemned by an instrument,

| | |
|---|---|
| Entitled: | Stipulated General Judgment |
| Court: | Circuit |
| Cause No.: | 13CV03477 |
| In favor of: | State of Oregon, by and through its Department of Transportation |
| Purpose: | Slopes |
| Recording Date: | March 10, 2016 |
| Recording No: | 201603533 |
| Affects: | Reference is hereby made to said document for full particulars |

13. The herein described Land has no rights of ingress and egress to the thoroughfare named below, such rights having been:

Taken by decree in favor of the State of Oregon, by and through its Department of Transportation, a certified copy of decree was recorded
Recording Date: March 10, 2016
Recording No: 201603533

Street name: State Highway adjoining Southerly and Easterly
Affects: Reference is hereby made to said document for full particulars

~~14.~~ The application for title insurance was placed by reference to only a street address or tax identification number. The proposed Insured must confirm that the legal description in this report covers the parcel(s) of Land requested to be insured. If the legal description is incorrect, the proposed Insured must notify the Company and/or the settlement company in order to prevent errors and to be certain that the legal description for the intended parcel(s) of Land will appear on any documents to be recorded in connection with this transaction and on the policy of title insurance.

~~15.~~ Please be advised that our search did not disclose any open Deeds of Trust of record. If you should have knowledge of any outstanding obligation, please contact the Title Department immediately for further review prior to closing.

16. The following are required when a principal to the proposed transaction is an instrumentality of the state, such as a municipality, a county or other governmental body:

- Certification, with supporting documentation, that the board or other governing authority of the governmental body has approved the transaction in accordance with applicable practices, procedures, rules, ordinances and statutes.
- Certification that a named person or persons, identified by name and position, are authorized to act on behalf of the governmental body in the proposed transaction.
- Verification of the current legal name and good standing of the governmental body when it is a local governmental body other than a city or county.

17. WARNING REGARDING DEED OR CONTRACT TO TAX-EXEMPT GOVERNMENTAL TRANSFEREE. Oregon law prohibits the county recording officer from recording a deed or contract to a tax-exempt governmental transferee, unless the deed or contract is accompanied by a certificate of payment of ad valorem county taxes. The certificate must be attested by the county assessor using a form prescribed by the Oregon Department of Revenue. Failure to allow adequate time for obtaining a certificate of payment may delay recording. This requirement is contained in Chapter 96, Oregon Laws 2015, effective Oct. 5, 2015.

18. If requested to issue an extended coverage ALTA loan policy, the following matters must be addressed:

a) The rights of tenants holding under unrecorded leases or tenancies
b) Matters disclosed by a statement as to parties in possession and as to any construction, alterations or repairs to the Land within the last 75 days. The Company must be notified in the event that any funds are to be used for construction, alterations or repairs.
c) Any facts which would be disclosed by an accurate survey of the Land

**ADDITIONAL REQUIREMENTS/NOTES:**

A. [Intentionally Deleted]

B. In addition to the standard policy exceptions, the exceptions enumerated above shall appear on the final 2006 ALTA Policy unless removed prior to issuance.

C. Note: No utility search has been made or will be made for water, sewer or storm drainage charges unless the City/Service District claims them as liens (i.e. foreclosable) and reflects them on its lien docket as of the date of closing. Buyers should check with the appropriate city bureau or water service district and obtain a billing cutoff. Such charges must be adjusted outside of escrow.

D. Note: Effective January 1, 2008, Oregon law (ORS 314.258) mandates withholding of Oregon income taxes from sellers who do not continue to be Oregon residents or qualify for an exemption. Please contact your Escrow Closer for further information.

E. NOTE: The following are required when a principal'to the proposed transaction is an instrumentality of the state, such as a municipality, a county or other governmental body:

- Certification, with supporting documentation, that the board or other governing authority of the governmental body has approved the transaction in accordance with applicable practices, procedures, rules, ordinances and statutes.
- Certification that a named person or persons, identified by name and position, are authorized to act on behalf of the governmental body in the proposed transaction.
- Verification of the current legal name and good standing of the governmental body when it is a local governmental body other than a city or county.

F. Note: There are NO conveyances affecting said Land recorded within 24 months of the date of this report.

G. Note: There are no matters against the party(ies) shown below which would appear as exceptions to coverage in a title insurance product:

Parties: Newberg School District 29J

H. THE FOLLOWING NOTICE IS REQUIRED BY STATE LAW: YOU WILL BE REVIEWING, APPROVING AND SIGNING IMPORTANT DOCUMENTS AT CLOSING. LEGAL CONSEQUENCES FOLLOW FROM THE SELECTION AND USE OF THESE DOCUMENTS. YOU MAY CONSULT AN ATTORNEY ABOUT THESE DOCUMENTS. YOU SHOULD CONSULT AN ATTORNEY IF YOU HAVE QUESTIONS OR CONCERNS ABOUT THE TRANSACTION OR ABOUT THE DOCUMENTS. IF YOU WISH TO REVIEW TRANSACTION DOCUMENTS THAT YOU HAVE NOT SEEN, PLEASE CONTACT THE ESCROW AGENT.

I. Recording Charge (Per Document) is the following:

| County | First Page | Each Additional Page |
|---|---|---|
| Yamhill | $81.00 | $5.00 |

Note: When possible the company will record electronically. An additional charge of $5.00 applies to each document that is recorded electronically.

Note: Please send any documents for recording to the following address:
Portland Title Group
Attn: Recorder
1433 SW 6th Ave.
Portland, OR. 97201

Please email your release to the following email address: or-ttc-yamhillrecording@tlcortitle.com

J. Note: This map/plat is being furnished as an aid in locating the herein described Land in relation to adjoining streets, natural boundaries and other land. Except to the extent a policy of title insurance is expressly modified by endorsement, if any, the Company does not insure dimensions, distances or acreage shown thereon.

K. Notice: Please be aware that due to the conflict between federal and state laws concerning the cultivation, distribution, manufacture or sale of marijuana, the Company is not able to close or insure any transaction involving Land that is associated with these activities.

L. NOTE: IMPORTANT INFORMATION REGARDING PROPERTY TAX PAYMENTS:

| | | |
|---|---|---|
| Fiscal Year: | July 1st through June 30th | |
| Taxes become a lien on real property, but are not yet payable: | | July 1st |
| Taxes become certified and payable (approximately on this date): | | October 15th |
| First one third payment of taxes is due: | November 15th | |
| Second one third payment of taxes is due: | February 15th | |
| Final payment of taxes is due: | May 15th | |

Discounts: If two thirds are paid by November 15th, a 2% discount will apply. If the full amount of the taxes are paid by November 15th, a 3% discount will apply.

Interest: Interest accrues as of the 15th of each month based on any amount that is unpaid by the due date. No interest is charged if the minimum amount is paid according to the above mentioned payment schedule.

# EXHIBIT ONE

## 2006 AMERICAN LAND TITLE ASSOCIATION LOAN POLICY (06-17-06)
## EXCLUSIONS FROM COVERAGE

The following matters are expressly excluded from the coverage of this policy and the Company will not pay loss or damage, costs, attorneys' fees or expenses that arise by reason of:

1. (a) Any law, ordinance or governmental regulation (including but not limited to building and zoning) restricting, regulating, prohibiting or relating to
   (i) the occupancy, use, or enjoyment of the Land;
   (ii) the character, dimensions or location of any improvement erected on the land;
   (iii) the subdivision of land; or
   (iv) environmental protection;
   or the effect of any violation of these laws, ordinances or governmental regulations. This Exclusion 1(a) does not modify or limit the coverage provided under Covered Risk 5.
   (b) Any governmental police power. This Exclusion 1(b) does not modify or limit the coverage provided under Covered Risk 6.
2. Rights of eminent domain. This Exclusion does not modify or limit the coverage provided under Covered Risk 7 or 8.
3. Defects, liens, encumbrances, adverse claims, or other matters
   (a) created, suffered, assumed or agreed to by the Insured Claimant;
   (b) not known to the Company, not recorded in the Public Records at Date of Policy, but known to the Insured Claimant and not disclosed in writing to the Company by the Insured Claimant prior to the date the Insured Claimant became an Insured under this policy;
   (c) resulting in no loss or damage to the Insured Claimant;
   (d) attaching or created subsequent to Date of Policy (however, this does not modify or limit the coverage provided under Covered Risk 11, 13, or 14); or
   (e) resulting in loss or damage that would not have been sustained if the Insured Claimant had paid value for the Insured Mortgage.
4. Unenforceability of the lien of the Insured Mortgage because of the inability or failure of an Insured to comply with the applicable doing-business laws of the state where the Land is situated.
5. Invalidity or unenforceability in whole or in part of the lien of the Insured Mortgage that arises out of the transaction evidenced by the Insured Mortgage and is based upon usury or any consumer credit protection or truth-in-lending law.
6. Any claim, by reason of the operation of federal bankruptcy, state insolvency or similar creditors' rights laws, that the transaction creating the lien of the Insured Mortgage, is
   (a) a fraudulent conveyance or fraudulent transfer, or
   (b) a preferential transfer for any reason not stated in the Covered Risk 13(b) of this policy.
7. Any lien on the Title for real estate taxes or assessments imposed by governmental authority and created or attaching between Date of Policy and the date of recording of the Insured Mortgage in the Public Records. This Exclusion does not modify or limit the coverage provided under Covered Risk 11(b).

The above policy form may be issued to afford either Standard Coverage or Extended Coverage. In addition to the above Exclusions from Coverage, the Exceptions from Coverage in a Standard Coverage policy will also include the following Exceptions from Coverage.

## SCHEDULE B - GENERAL EXCEPTIONS FROM COVERAGE

This policy does not insure against loss or damage (and the Company will not pay costs, attorneys' fees or expenses) which arise by reason of:

1. Taxes or assessments which are not shown as existing liens by the records of any taxing authority that levies taxes or assessments on real property or by the Public Records; proceedings by a public agency which may result in taxes or assessments, or notices of such proceedings, whether or not shown by the records of such agency or by the Public Records.
2. Facts, rights, interests or claims which are not shown by the Public Records but which could be ascertained by an inspection of the Land or by making inquiry of persons in possession thereof.
3. Easements, or claims of easement, not shown by the Public Records; reservations or exceptions in patents or in Acts authorizing the issuance thereof, water rights, claims or title to water.
4. Any encroachment, encumbrance, violation, variation, or adverse circumstance affecting the Title that would be disclosed by an accurate and complete land survey of the Land. The term "encroachment" includes encroachments of existing improvements located on the Land onto adjoining land, and encroachments onto the Land of existing improvements located on adjoining land.
5. Any lien for services, labor or material heretofore or hereafter furnished, or for contributions due to the State of Oregon for unemployment compensation or worker's compensation, imposed by law and not shown by the Public Records.

## 2006 AMERICAN LAND TITLE ASSOCIATION OWNER'S POLICY (06-17-06)
## EXCLUSIONS FROM COVERAGE

The following matters are expressly excluded from the coverage of this policy and the Company will not pay loss or damage, costs, attorneys' fees or expenses that arise by reason of:

1. (a) Any law, ordinance or governmental regulation (including but not limited to building and zoning) restricting, regulating, prohibiting or relating to
   (i) the occupancy, use, or enjoyment of the Land;
   (ii) the character, dimensions or location of any improvement erected on the land;
   (iii) the subdivision of land; or
   (iv) environmental protection;
   or the effect of any violation of these laws, ordinances or governmental regulations. This Exclusion 1(a) does not modify or limit the coverage provided under Covered Risk 5.
   (b) Any governmental police power. This Exclusion 1(b) does not modify or limit the coverage provided under Covered Risk 6.
2. Rights of eminent domain. This Exclusion does not modify or limit the coverage provided under Covered Risk 7 or 8.
3. Defects, liens, encumbrances, adverse claims, or other matters
   (a) created, suffered, assumed or agreed to by the Insured Claimant;
   (b) not known to the Company, not recorded in the Public Records at Date of Policy, but known to the Insured Claimant and not disclosed in writing to the Company by the Insured Claimant prior to the date the Insured Claimant became an Insured under this policy;
   (c) resulting in no loss or damage to the Insured Claimant;
   (d) attaching or created subsequent to Date of Policy (however, this does not modify or limit the coverage provided under Covered Risk 9 and 10); or
   (e) resulting in loss or damage that would not have been sustained if the Insured Claimant had paid value for the Title.
4. Any claim, by reason of the operation of federal bankruptcy, state insolvency or similar creditors' rights laws, that the transaction creating the lien of the Insured Mortgage, is
   (a) a fraudulent conveyance or fraudulent transfer, or
   (b) a preferential transfer for any reason not stated in the Covered Risk 9 of this policy.
7. Any lien on the Title for real estate taxes or assessments imposed by governmental authority and created or attaching between Date of Policy and the date of recording of the deed or other instrument of transfer in the Public Records that vests Title as shown in Schedule A.

The above policy form may be issued to afford either Standard Coverage or Extended Coverage. In addition to the above Exclusions from Coverage, the Exceptions from Coverage in a Standard Coverage policy will also include the following Exceptions from Coverage.

## SCHEDULE B - GENERAL EXCEPTIONS FROM COVERAGE

This policy does not insure against loss or damage (and the Company will not pay costs, attorneys' fees or expenses) which arise by reason of:

1. Taxes or assessments which are not shown as existing liens by the records of any taxing authority that levies taxes or assessments on real property or by the Public Records; proceedings by a public agency which may result in taxes or assessments, or notices of such proceedings, whether or not shown by the records of such agency or by the Public Records.
2. Facts, rights, interests or claims which are not shown by the Public Records but which could be ascertained by an inspection of the Land or by making inquiry of persons in possession thereof.
3. Easements, or claims of easement, not shown by the Public Records; reservations or exceptions in patents or in Acts authorizing the issuance thereof, water rights, claims or title to water.
4. Any encroachment, encumbrance, violation, variation, or adverse circumstance affecting the Title that would be disclosed by an accurate and complete land survey of the Land. The term "encroachment" includes encroachments of existing improvements located on the Land onto adjoining land, and encroachments onto the Land of existing improvements located on adjoining land.
5. Any lien for services, labor or material heretofore or hereafter furnished, or for contributions due to the State of Oregon for unemployment compensation or worker's compensation, imposed by law and not shown by the Public Records.

WIRE SAFE™ | Inquire before you wire!

# WIRE FRAUD ALERT

This Notice is not intended to provide legal or professional advice.
If you have any questions, please consult with a lawyer.

All parties to a real estate transaction are targets for wire fraud and many have lost hundreds of thousands of dollars because they simply relied on the wire instructions received via email, without further verification. **If funds are to be wired in conjunction with this real estate transaction, we strongly recommend verbal verification of wire instructions through a known, trusted phone number prior to sending funds.**

In addition, the following non-exclusive self-protection strategies are recommended to minimize exposure to possible wire fraud.

- **NEVER RELY** on emails purporting to change wire instructions. Parties to a transaction rarely change wire instructions in the course of a transaction.
- **ALWAYS VERIFY** wire instructions, specifically the ABA routing number and account number, by calling the party who sent the instructions to you. DO NOT use the phone number provided in the email containing the instructions, use phone numbers you have called before or can otherwise verify. **Obtain the number of relevant parties to the transaction as soon as an escrow account is opened.** DO NOT send an email to verify as the email address may be incorrect or the email may be intercepted by the fraudster.
- **USE COMPLEX EMAIL PASSWORDS** that employ a combination of mixed case, numbers, and symbols. Make your passwords greater than eight (8) characters. Also, change your password often and do NOT reuse the same password for other online accounts.
- **USE MULTI-FACTOR AUTHENTICATION** for email accounts. Your email provider or IT staff may have specific instructions on how to implement this feature.

For more information on wire-fraud scams or to report an incident, please refer to the following links:

***Federal Bureau of Investigation:***
http://www.fbi.gov

***Internet Crime Complaint Center:***
http://www.ic3.gov


*TM and © Fidelity National Financial, Inc. and/or an affiliate. All rights reserved*

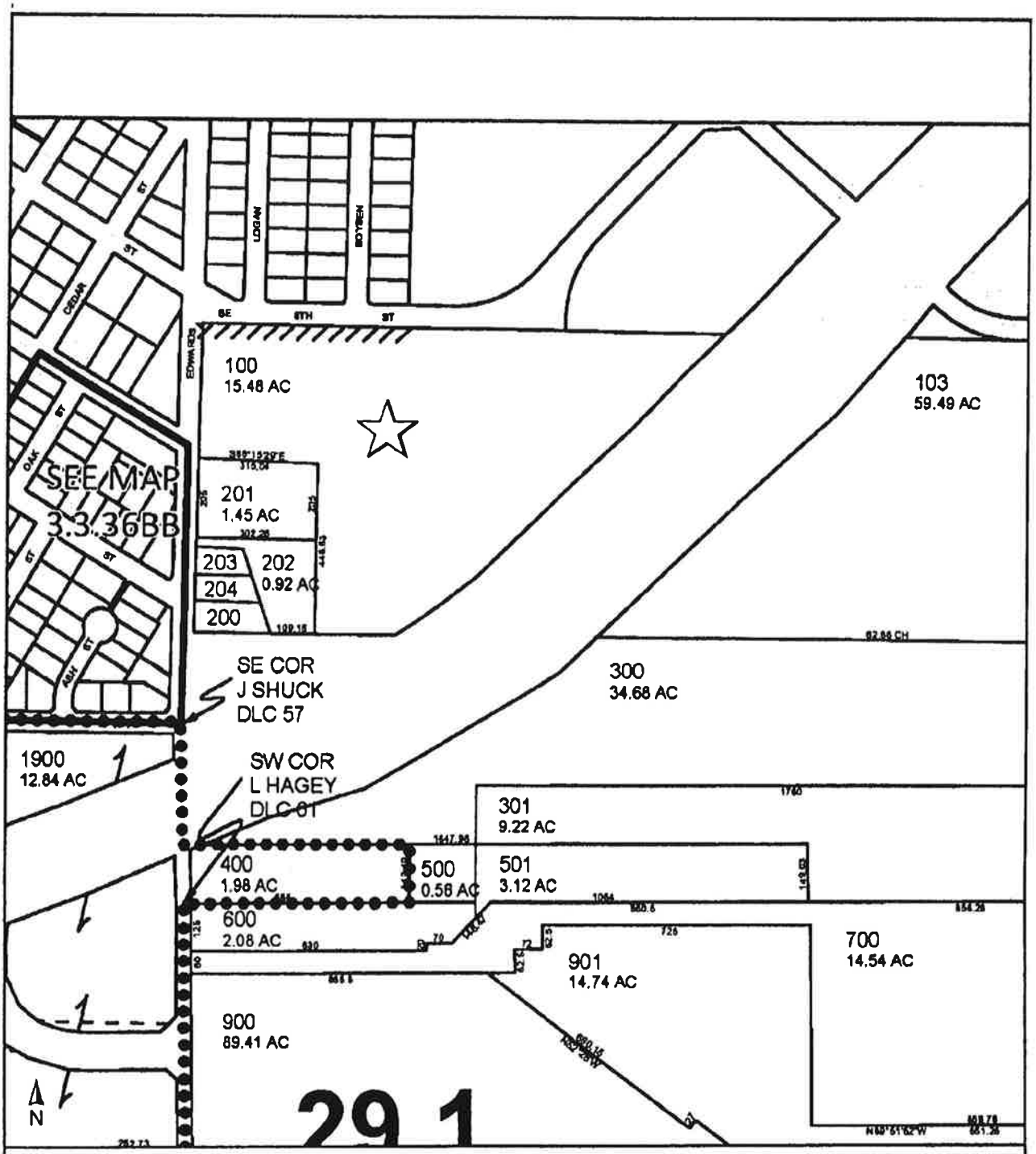


**ParcelID: 82984**

**Dundee, OR 97115**

This map/plat is being furnished as an aid in locating the herein described land in relation to adjoining streets, natural boundaries and other land, and is not a survey of the land depicted. Except to the extent a policy of title insurance is expressly modified by endorsement, if any, the company does not insure dimensions, distances, location of easements, acreage or other matters shown thereon.

## CERTIFICATION OF NONFOREIGN STATUS

| | | |
|---|---|---|
| FROM: | Stuart H. Lindquist | Transferor |
| TO: | County of Yamhill School District 29J | Transferee |
| RE: | Sale of real property located in Yamhill County, OR, described as shown on attached Exhibit "A" | |

Section 1445 of the Internal Revenue Code (the "Code") provides that a transferee of a United States real property interest must withhold tax if the transferor is a foreign person. To inform Transferee that withholding of tax is not required upon the disposition of a United States real property interest by Transferor, the undersigned hereby certifies the following on behalf of Transferor:

1. Transferor is not a foreign corporation, foreign partnership, foreign trust, or foreign estate (as those terms are defined in the Internal Revenue Code and Income Tax Regulations).

2. Transferor's United States Tax Payer Identification Number is: ON FILE.

3. Transferor's office address is: PO Box 42135 Portland OR 97242

4. The Transferor is not a disregarded entity as defined in § 1.1445-2(b)(2)(iii) of the Code.

Transferor understands that this certification may be disclosed to the Internal Revenue Service by Transferee and that any false statement contained herein could be punished by fine, imprisonment, or both.

Under penalties of perjury, I declare that I have examined this certification and to the best of my knowledge and belief it is true, correct and complete, and I further declare that I have authority to sign this document on behalf of Transferor.

Dated: December 15, 2021

Stuart H. Lindquist

196212-0084/VANDOCS:50063547.1

# EXHIBIT A

**Order No.:** 45142120109

Being a part of the Levi Hagey Donation Land Claim, Notification No. 1434, Claim No. 61 in Township 3 South, Range 2 West of the Willamette Meridian, in Yamhill County, Oregon, said part being more particularly described and bounded as follows, to-wit:

Beginning at a post set in the Southwest corner of said Donation Land Claim; and running thence North along the fence line, 10.71 chains to a post at the Northwest corner of that tract conveyed to John Parret et ux., by Deed recorded in Book K, Page 629, Deed Records of Yamhill County, Oregon, which said last name post and corner is the starting point of the tract herein described as is the Southwest corner of the tract described herein; running thence North along the fence line to a post set in the corner of the fence at a point 53.641 chains South of the Northwest corner of said Donation Land Claim, which point is the Southwest corner of Parcel 1, described in Deed recorded July 10, 1963 in Deed and Mortgage Film Volume 31, Page 392, Yamhill County Deed Records, to Clara H. Robertson; running thence East 79.78 chains, more or less, to the most Northeasterly corner of the tract herein described and the Southeast corner of said Robertson tract; thence running Southwesterly 73°, 5.46-1/3 chains; thence South 74° West 2.5 chains; thence South 51°30' West, 10.5 chains; thence South 53° West 2.31 chains to the Northeast corner of said John Parrett tract; thence West along line of fence, 62.86 chains, more or less, to the Point of Beginning.

SAVE AND EXCEPTING THEREFROM the following described tract of land:

Beginning at an iron rod set in the South fence line of the Lile tract as described in Book 163, Page 648, Deed Records, Yamhill County, Oregon, said point being North 00°37'20" East, 715.92 feet from the Southwest corner of said Levi Hagey Donation Land Claim, said point also being in the East line of County Road No. 79; thence East along said South fence line, 320.27 feet; thence North 00°28'55" West, 448.83 feet; thence North 89°10'30" West, 315.04 feet to an iron rod set at a fence corner post in the East line of County Road No. 79; thence South 00°11'20" West, 453.34 feet to the Point of Beginning.

FURTHER SAVE AND EXCEPTING THEREFROM those portions described in Stipulated General Judgment entered in the Circuit Court of the State of Oregon for the County of Yamhill in Case No. 13CV03477, State of Oregon, by and through its Department of Transportation vs. Stuart H. Lindquist et al. and recorded on March 10, 2016, as Instrument No. 201603533, Deed and Mortgage Records of Yamhill County, Oregon.

FURTHER SAVE AND EXCEPTING THEREFROM that portion lying East of the centerline of those portions described in Stipulated General Judgment entered in the Circuit Court of the State of Oregon for the County of Yamhill in Case No. 13CV03477, State of Oregon, by and through its Department of Transportation vs. Stuart H. Lindquist et al. and recorded on March 10, 2016, as Instrument No. 201603533, Deed and Mortgage Records of Yamhill County, Oregon.

ACKNOWLEDGED AND ACCEPTED BY BUYER:

County of Yamhill School District 29J

BY: _____
Nikki Fowler
Director of Finance

# Appendix A

Comprehensive Plan Amendments – New Riverside District Chapter
(Amended _____ 2022)

RIVERSIDE DISTRICT

GOAL: Adopt a new Riverside District comprehensive plan designation and master plan to provide a land use and transportation framework to guide long-term development of the Riverside District.

OBJECTIVES

1. Apply a new Riverside District comprehensive plan designation to the approximately 360 acre planning area within the city limits shown in Figure 1.

2. Adopt the Riverside District Master Plan (June 2011) and amended 2022 by reference as a support document to the Dundee Comprehensive Plan.

3. Adopt comprehensive plan policies specific to the Riverside District.

4. Recognize that adoption of the comprehensive plan framework (text and map amendments) represents the first steps in a multi-step process required prior to development. Future actions will include, but not be limited to:

    - Preparation of more detailed infrastructure and financial plans to assure adequate public facilities and services to support the master plan;

    - Development Code text amendment to adopt new Riverside District Zone;

    - Zone Change(s) to apply the new Riverside District Zone;

    - Detailed master plans (by subarea) to establish local street network, identify specific park sites and trail connections, lay out blocks, refine mix of land uses and set range of densities, mix of housing types and lot sizes, establish phasing schedule, etc.

    - Subdivision(s) to divide land in accordance with detailed master plans; dedicate local streets, parks and trail and utility easements; install public and private improvements, etc.

    - Potential site design review for non-residential buildings, unless clear and objective design standards are adopted as part of the detailed master plan for a particular subarea.

EXISTING CONDITIONS

The Riverside District was annexed to the City of Dundee in 1969, prior to adoption of Senate Bill 100 and Oregon's statewide planning program. When the Dundee Comprehensive Plan was adopted in 1977, the majority of the Master Plan area was included in Dundee's Urban Growth Boundary (UGB). The city applied an Agriculture (A) holding zone to approximately 235 acres within the UGB and plan policies called for incremental rezoning of the agricultural land for residential use based on need.

Agricultural and undeveloped lands on the lower terrace near the Willamette River were not included in the 1977 UGB. The city applied an Exclusive Farm Use (EFU) zone to preserve approximately 125 acres within the city limits for farm uses.

The Riverside District is still largely undeveloped, with the exception of the wastewater treatment plant and a few single family dwellings. In 2008, Dundee City Council re-zoned about 54 acres in the northerly portion of the Riverside District from the Agriculture holding zone to a mix of residential (R-2 and R-3), commercial (CC) and light industrial (LI) zones. Conditions were attached to the zone change approval to limit certain uses, require submittal and approval of a master plan and assure adequate public facilities prior to development of the subject property. During the zone change process, the City Council expressed interest in using the master planning process to ensure integrated planning and development of the entire Riverside District instead of piecemeal rezoning.

Plans for the Newberg-Dundee Bypass also have significant implications for development in the Riverside District. After a lengthy federal environmental review process, Yamhill County and the cities of Newberg, Dundee and Dayton all approved the Bypass alignment and adopted comprehensive plan policies to support the Bypass. The Bypass alignment fragments the Riverside District. The Bypass will have full access control and ODOT will build two overcrossings in the vicinity of 8th Street and Fulquartz Landing Road/Parks Drive to provide connectivity across the Bypass and maintain access to the Willamette River.

The master plan document summarizes background information and existing conditions for the Riverside District planning area. A Background Conditions Report (August 2010) provides more detailed information on existing conditions.

FINDINGS OF FACT

The Riverside District encompasses the majority of the city's buildable land inventory. The City of Dundee initiated the master planning process in 2010 to provide a more detailed land use and transportation plan to guide coordinated development of this special area. The project was

funded by a grant from the Oregon Department of Transportation and Growth Management (TGM) Program.

The Riverside District features a number of unique assets and opportunities:

- A relatively small number of property owners and large parcels of undeveloped land, making master planning easier;
- A prime location along the Willamette River, with outstanding views of the river and surrounding areas in addition to access to water-based recreation;
- Natural resources that provide intrinsic natural values as well as amenities to future residents and visitors; and
- Community support for the master planning process.

The Riverside District master plan reflects substantial input from the public involvement process, including opportunities for on-going coordination with the major property owners. A key step in the planning process was a design charrette, held October 10-14, 2010, to identify land use and transportation plan alternatives for the Riverside District. A market study and a transportation analysis informed the selection of the preferred alternative.

A preliminary, planning-level analysis of public facilities and services needed to implement the preferred alternative was prepared and included in the Land Use Alternatives Report. However, that report was very clear that more analysis of costs and financing mechanisms and responsibilities will need to be conducted to implement the master plan.

On March 31, 2011, Murray, Smith & Associates, Inc. (MSA) presented a memorandum to the City Administrator to provide an estimate of the available capacity of the City of Dundee's existing water supply sources to serve additional development within the City's Urban Growth Boundary (UGB). The memorandum clearly documented the severity of the constraints on the existing water supply.

Following consideration of the water supply issue, the City decided to proceed with the first steps in the planning process (adoption of the Riverside District plan designation and this Comprehensive Plan chapter) and defer adoption of the Riverside District Zone and rezoning land in the Riverside District until adequate public facilities and services can be assured.

POLICIES

1. The policies in this Riverside District chapter shall replace and supersede any policies in the Dundee Comprehensive Plan that relate to the area within the new Riverside District plan designation.

2. The City will identify the boundaries of the Riverside District plan designation on the Comprehensive Plan Map as shown in Figure 1.

3. The City will retain existing zoning that applies within the Riverside District plan designation. Existing zoning shall be considered consistent with the Riverside District plan designation because existing zones allow less intensive, lower density development than anticipated in the Riverside District Master Plan. Uses and development allowed under existing zoning regulations will be allowed, consistent with the provisions of the Dundee Development Code, statewide administrative rules and statutes, all of these policies, and any conditions of prior zoning and development approvals.

4. The waterfront uses are integral to and needed to support the overall development and open space vision of the Master Plan. The City will support the concept of expanding the UGB to coincide with the existing city limits and provide more appropriate zoning to accommodate the urban park, open space and recreational uses identified in the Riverside District Master Plan.

5. The City will adopt the Riverside District Master Plan (June 2011) and as amended 2022) by reference as a supporting document to the Dundee Comprehensive Plan. The Master Plan is intended to identify a coordinated mix of residential, commercial, public, tourism and open space and recreational uses that are cohesive and connected with Dundee's larger community vision. The Master Plan includes additional policies that will be applicable to review and approval of future zone changes, detailed master plans and subdivisions within the Riverside District.

6. Because the Master Plan is considered a concept document, the City will consider refinements to the location and arrangement of land uses and other aspects of the Master Plan prior to or in coordination with implementation of Riverside District zoning. Any changes to the concept Master Plan must include the following limitations and components:

    - A maximum of 22 acres designated for Commercial uses.

    - A maximum of 13 acres designated for Light Industrial uses.

- A mix of housing types and densities, with a target of ~~970~~ 906 units in the Riverside District.

- In areas where the Riverside District is adjacent to developed, lower density residential areas, the development standards of the lower density zone (maximum heights and setbacks) shall apply to new housing on abutting lots in the Riverside District.

- Neighborhood park sites shall be required based on the target of ~~970~~ 906 dwelling units according to the standards of the Dundee Parks and Open Space Plan.

- A connected trail system shall be required to accommodate the Willamette River Trail, the Chehalem Heritage Trail, and connecting local trails within the Riverside District that link to the larger community trail system.

- Cross-sections for trail improvements shall accommodate linear stormwater quality facilities, particularly along the top of the bluff.

- A connected local street system with cross-sections specified to encourage sidewalks, planter strips, and street trees. Blocks shall not exceed a maximum length of 400 feet in commercial areas or 600 feet in residential areas.

- A parkway collector shall be required to provide a north-south link of development subareas to the east of the Bypass and connections to the two Bypass overcrossings. The cross-section for the parkway collector shall be consistent with the standards in the Dundee TSP.

- Riparian corridors shall be protected with a minimum 50-foot setback from the top of bank elevation.

7. Planning for water use should incorporate techniques and systems (e.g. “purple pipe”) for water reuse and conservation to the greatest degree practical, including potential reuse of wastewater for irrigation or other purposes.

8. All development within the Riverside District shall be adequately supported by the required facilities and services, including parks, schools, transportation, water, stormwater and wastewater infrastructure. Implementing ordinances shall provide that:

    - Required facilities and services must be available concurrent with development; and

- No implementing zoning map amendment may be granted except upon a finding that all required facilities and services are available, or can be made available, concurrent with development.

IMPLEMENTATION

The Riverside District Master Plan includes an Action Chart that identifies implementation action issues that will need to be addressed by the city, property owners, and/or other local and state agencies and stakeholder to support development of the Riverside District. The Action Chart does not reflect City budget commitments but is intended to highlight the scope of some of the action items.

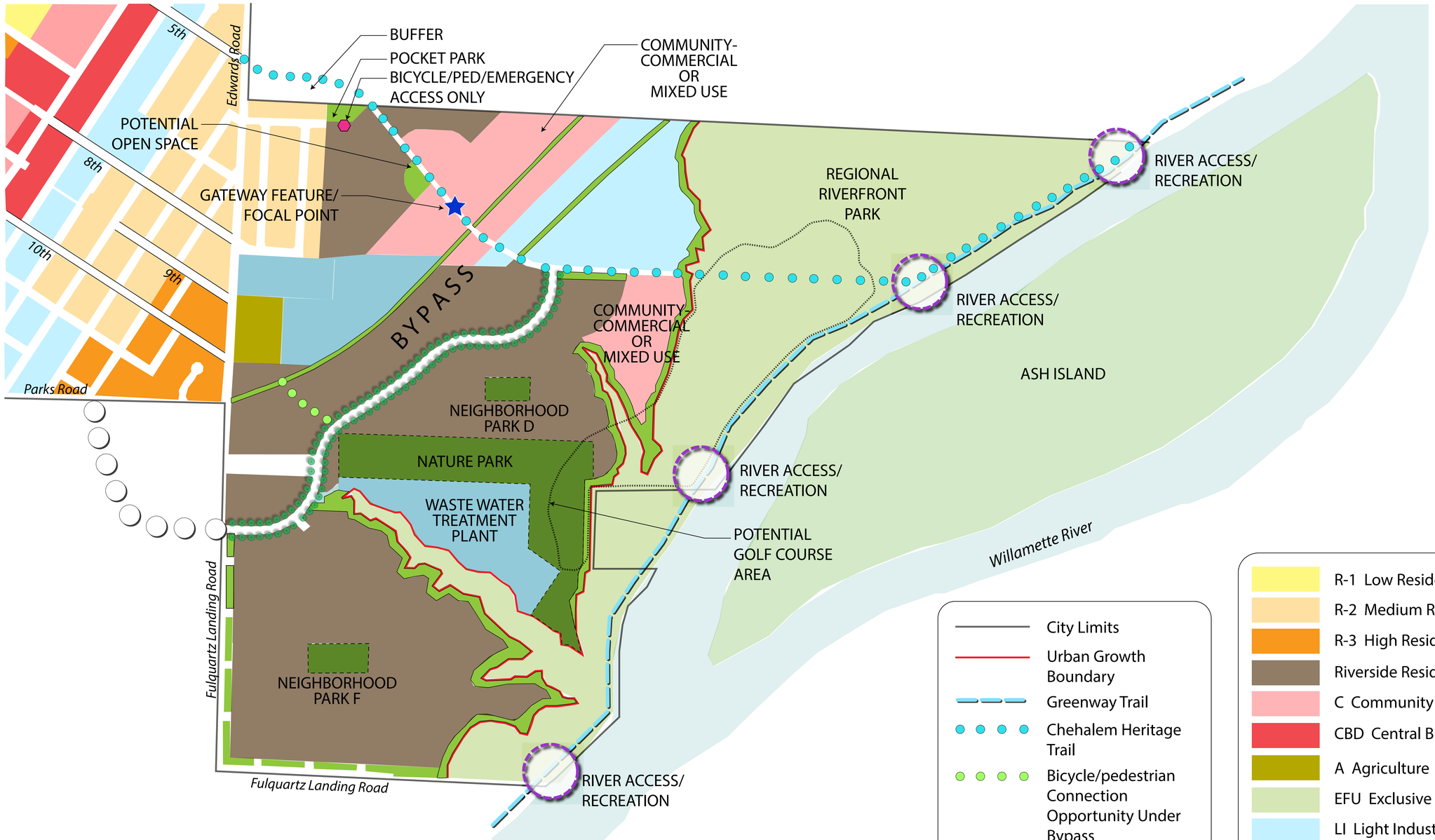


Note: Locations of river access/recreation areas, a potential future golf course, future neighborhood parks, and pocket parks should be considered approximate and conceptual. Locations of these elements will be further defined through subsequent development application processes.

- City Limits
- Urban Growth Boundary
- Greenway Trail
- Chehalem Heritage Trail
- Bicycle/pedestrian Connection Opportunity Under Bypass
- Proposed Bypass Crossing
- "Green Seam" (Trails and Stormwater)
- Parkway Street Trees

- R-1 Low Residential
- R-2 Medium Residential
- R-3 High Residential
- Riverside Residential (10 units/acre)
- C Community Commercial
- CBD Central Business District
- A Agriculture
- EFU Exclusive Farm Use
- LI Light Industrial
- P Public
- Parks
- Greenway Management Overlay Zone
- Flood Hazard Zone

0' 300' 600' 900'

*Base map is scaled from aerial. Scale is approximate.

# Master Plan

## RIVERSIDE DISTRICT AND SUBAREAS MASTER PLAN - CITY OF DUNDEE

June 10, 2011

- The acreage designated for Commercial (14 acres) and Light Industrial (13 acres) uses in the Master Plan is generally consistent with the zone change approved for the Edwards property in 2008. The Master Plan identifies one additional area for Commercial or Mixed Use (8 acres) in Subarea D that is currently in the Agriculture holding zone.

General land uses for each subarea are described below and illustrated on Figures 1 and 2 on the following pages. The allocation of housing units and non-residential floor area by subarea is shown in Table 2.

**Subarea A**, located west of the Bypass corridor and north of 8th Street, includes a mix of planned commercial and residential uses along with pocket parks. The land uses in Subarea A are generally consistent with the uses approved as part of the 2008 zone change for River Farms, LLC, with some refinements in the location of certain uses. General land use categories for Subarea A are summarized below.

- Permitted residential uses include a mix of single-family detached units on relatively small lots, single-family attached units (e.g., townhouses or rowhouses) and some multi-family uses. Lower density residential uses are planned at the west edge of Subarea A for compatibility with adjacent development. A broader mix of housing types and higher densities are accommodated in the central portion of the Subarea. The Master Plan targets development of up to 110 residential units in Subarea A.
- Commercial and Mixed uses are located in the easterly portion of Subarea A, abutting the Bypass and higher density residential uses. The commercial use category accommodates a variety of retail, service and office uses. Drive-through facilities will be prohibited to foster a village scale. The Riverside District Zone may limit the footprint of individual buildings, require conditional use approval for buildings over a certain size (such as 10,000 or 20,000 square feet) and impose design standards. The Commercial and Mixed Use areas will provide flexibility for vertical and horizontal mixed use, including upper story residential or office over ground floor commercial and live/work units. The Master Plan allows development of up to approximately 147,000 square feet of non-residential floor area in Subarea A, assuming typical floor area ratios for commercial development. The actual amount and scale of commercial development may be lower, based largely on market demand.

**Subarea B**, located east of the Bypass corridor and north of 8th Street, is designated for light industrial use. Permitted uses in this area include food and beverage production and sales activities, which could include a "Vintner's Village" of independent wine production and tasting facilities and indoor and outdoor event space. Other permitted uses include eating and drinking facilities. The Master Plan envisions that uses in Subarea B will have a synergy with tourist, open space and recreational uses that take advantage of the riverside location east of the Bypass. The Master Plan allows development of up to 204,000 square feet of non-residential floor area in Subarea B, assuming typical floor area ratios for this type of development. The actual amount and scale of development in Subarea B may be lower, based largely on market demand.

**Subarea C**, located west of the Bypass corridor and south of 8th Street, is designated for public uses. This area is anticipated to be the location of a new elementary school. The school site may function in part to meet park needs during non-school hours. Preservation of the specimen Oak trees located in Subarea C will need to be factored into any development of the area for public uses.

~~residential uses and a neighborhood park. Permitted residential uses include a mix of single-family detached units on standard and small lots, single-family attached units (e.g., townhouses or rowhouses) and some multi-family uses. Lower density residential uses are planned at the west edge of Subarea C for compatibility with adjacent development. Residential densities are higher closer to the Bypass. The Master Plan targets development of up to 64 residential units in Subarea C.~~.

~~The Master Plan identifies the location of a neighborhood park in Subarea C that will be dedicated with development. The park location reflects the amenity value of specimen Oak trees and is based on neighborhood park size and location criteria from the Dundee Parks and Open Space Plan. The size and location of the neighborhood park is conceptual and the precise location and size will be determined as part of a future development application process.~~.

overall development and open space vision of the Master Plan. Additionally, Yamhill County has recommended a UGB amendment that would accommodate the uses shown in the master plan and remove the on-going confusion regarding land use jurisdiction.

The following table summarizes projected acres of development by land use type, as well as target dwelling units, and square footage of retail, commercial, and industrial development for the Riverside District.

***Table 1 – Riverside District Land Uses***

| Locations/Designations | Acres | Percent[1] | Target Dwelling Units[3] | Maximum Floor Area of Development[4] |
|---|---|---|---|---|
| Inside urban growth boundary (UGB) | | | | |
| Residential | ~~100~~85 | ~~38~~32% | ~~970~~ 906 | |
| Commercial | 22 | 8% | | 239,000 |
| Light Industrial | 13 | 5% | | 204,000 |
| Public | 15 | 6% | | |
| *Subtotal* | *135* | *51%* | *~~970~~ 906* | *443,000* |
| Neighborhood Park | 8 | 3% | | |
| Nature Park | 24 | 10% | | |
| Roads (excluding Bypass) | 29 | 11% | | |
| Trails/green seams | 23 | 9% | | |
| Newberg Dundee Bypass corridor | 27 | 10% | | |
| Wastewater treatment plant[2] | 17 | 7% | | |
| *Subtotal (Inside UGB)* | *263* | *73%* | | |
| Outside UGB (open space or recreation) | 97 | 27% | | |
| **Total Planning Area** | **360** | **100%** | **~~970~~ 906** | **443,000** |

Notes

1. Percentages are as a total of land within the UGB except the Subtotal and land outside the UGB.

2. A small portion of the treatment plant acreage reflected in this number is outside the UGB; acreage does not include potential turtle habitat areas south of Lagoon #4 (Canyon Lake)

3. Assumes a mix of housing types and an overall average density of about 10 units/acre.

4. Assumes floor area ratios of 0.25 for commercial and mixed use and 0.35 light industrial and hotel uses.

***Table 2 – Target Dwelling Units and Non-Residential Floor Area by Subarea and Land Use***

| Subarea | Land Use Designation | Acres | Target Dwelling Units | Max. Non-Residential Floor Area |
|---|---|---|---|---|
| A | Commercial | 14 | 14 | 147,500 |
| A | Residential | 13 | 96 | NA |
| B | Light Industrial | 13 | NA | 204,000 |
| C | Public ~~Residential~~ | 11 | ~~64~~NA | NA |
| D | Commercial/Mixed Use | 8 | NA | 91,500 |
| D | Residential | 23 | 277 | NA |
| E | Public | 41[1] | NA | NA |
| F | Residential | 53 | 519 | NA |
| G | Agricultural, Open Space and Recreation | 97 | NA | NA |
| **TOTAL** | | **273[2]** | **~~970~~906** | **443,000** |

Notes

1. Acreage includes approximate area of WWTP and planned Nature Park

2. This total does not include the area estimated for neighborhood parks, trails, roads and the Bypass corridor, shown in Table 1.

## B. Riverside District Policies

After the adoption and implementation of a new Riverside District Zone, the following policies will apply to Planning Commission review and approval of detailed master plan(s) and subdivision(s) of individual or consolidated subareas within the Riverside Master Plan District. The detailed master plan and subdivision reviews will be key steps in setting the stage for specific development of each subarea because they will:

- Establish and dedicate the local street system;
- Identify the specific location and size of neighborhood park(s) identified in the Master Plan and dedicate the planned park(s) in conjunction with the subdivision;
- Confirm that the number of residential lots is consistent with the overall target residential units;
- Layout infrastructure (particularly water and sewer) to accommodate the proposed subdivision and identify improvements needed to assure adequate public facilities; and
- Include a simple traffic analysis to assess the trips and required transportation improvements based on the overall transportation analysis completed for the Master Plan.

The policies will also apply to discretionary review of conditional uses, site design review and amendments of the Riverside District Master Plan. However, the policies will not apply to the review of individual building permits for development on platted lots that is consistent with the use tables and design standards of the Riverside District Zone once it is adopted.

### *Land Use*

As shown in Figure 1, the Riverside District Master Plan envisions the long-term development of a cohesive district that includes a mix of land uses and housing types served by an interconnected of "complete" streets

with planter strips, street trees and sidewalks. A substantial portion of the Riverside District will be devoted to park, open space and a trail network that will serve both the Riverside District and the larger community and provide a unique amenity for development. Non-residential development is targeted to the northerly 1/3 of the Riverside District. It is envisioned that commercial uses to the west of the Bypass will be smaller-scale neighborhood commercial uses. Non-residential uses to the east of the Bypass are envisioned to be larger-scale "destination" uses such as wineries, event facilities, hotel, restaurants and related uses.

1. The Riverside District Master Plan identifies the approximate location and acres of general land use categories by subarea (See Figure 2 and Table 2). Through the detailed master plan and subdivision process, the applicant shall have the ability to propose minor changes between the boundaries of the use areas, consistent with the overall target housing units and non-residential floor area allocated to the subarea.
2. When a partition or subdivision application is submitted for a subarea, even if it only includes a smaller first phase of development, a detailed master plan shall be submitted for the entire subarea to show the layout of streets and more precise location of the neighborhood park (if a conceptual location is shown on the approved Master Plan for the Subarea). The detailed master plan will provide the tool to track the target housing units and maximum non-residential floor area consistent with the allocations by subarea in Table 2.
3. A mixture of different building types is encouraged within the residential areas (e.g. single family residential, duplex, attached single family residential, multi-family). Outside of the overall target number of housing units specific for each subarea, it is expected that the Riverside District Zone will provide broad flexibility for a mix of housing types and lot sizes. The detailed master plan shall identify lots intended for attached and multifamily housing. To ensure efficient use of land in the Riverside District, an average density of 10 units per acre is established. Lot sizes may be averaged and densities may be shifted between subareas to provide flexibility to meet changing housing and market needs.
4. Development within subareas designated for commercial, mixed use and light industrial uses in Subareas A, B and D shall be consistent with the standards included in the Riverside District Zone (when adopted), including limitations on certain uses, maximum building size and basic design standards.
5. The approved Master Plan assumed certain categories of commercial and light industrial uses would be appropriate in the Riverside District. While the Riverside District Zone will provide some flexibility for the City to allow "similar uses" through a Type I-B review, a major change in the list of permitted and conditional uses will require Type II Planning Commission approval or a Type IV Development Code text amendment.
6. The Master Plan identifies a conceptual location for a potential golf course. While a golf course is considered an appropriate use in the Riverside District, conditional use approval is required to review the layout of the golf course relative to public trails and access to the riverfront. Additionally, conditional use approval is required for any portion of the golf course located within Dundee's Exclusive Farm Use (EFU) zone. Through the conditional use review process, the City shall also encourage the use of recycled wastewater or on-site water sources for golf course irrigation to avoid pressure on the City's domestic water supply sources. Based on input from the Department of Land Conservation and Development, development of a golf course on Dundee's designated EFU land may require a goal exception or UGB amendment.
7. The City will support a future UGB amendment application to include Subarea G within Dundee's UGB to accommodate the open space and recreational uses identified in the Riverside Master Plan. The location of this subarea inside of the city limits but outside of the UGB complicates land use jurisdiction.
8. If the School District identifies a need for future school(s) within the Master Plan area, appropriate site(s) shall be identified consistent with the policies of the Dundee Comprehensive Plan and/or School District Facility Plan.
9. The Riverside District Master Plan does not designate potential school sites and the transportation analysis

**Formatted:** Indent: Left: 0.34"

~~9. The Riverside District Master Plan does not designate potential school sites and the transportation analysis~~ did not assume development of a school in any of the subareas. At a minimum, development of a public school within the Riverside District would require conditional use approval and a full traffic analysis. A school in a Public zone is a permitted use.

## *Transportation*

The main elements of the Riverside District transportation system are shown in Figure 3. This figure shows the approximate location of the two overcrossings of the Bypass that will be built by ODOT. The approximate location of the "Parkway Collector" is also shown to the east side of the Bypass. The local street system for the Riverside District will be defined as part of subsequent land use applications, based on established code standards for street connectivity and maximum block length.

1. The Riverside District Master Plan accommodates the development of the Bypass in the location shown in the Tier 2 Draft Environmental Impact Statement (Tier 2 DEIS) and the Dundee TSP. ODOT shall acquire all right-of-way needed for the Bypass and the overcrossings and construct the facilities.
2. The City and the affected property owners will continue to coordinate with ODOT on the location and design details for the overcrossings and landscaping of the berms. The City will advocate for a design that maximizes the developable area in the Riverfront District and reduces the visual impact of the Bypass.
3. An interconnected street system shall be provided within and between residential, commercial, and mixed use areas. Because local streets may be extended on an incremental basis in some subareas, it may be necessary to accept temporary dead-ends or "stub streets" that will be extended when future development occurs.
4. All streets shall be built to established standards for street connectivity and block length as set forth in Chapter 2.202 of the Development Code. Street standards in the Riverside District Zone shall supersede TSP or Development Code standards where they conflict.
5. The collector to the east side of the Bypass shall be developed to a "parkway" standard to integrate the subareas and help establish the overall design character of the Riverside District. In addition to providing internal connections east of the Bypass, construction of this road will ensure that all subareas east of the Bypass would have two ways to cross the Bypass, which is important for safety and emergency service reasons.
6. Street trees shall be required in all subareas of the Riverside District. Street trees shall be installed and maintained to the standards specified in the Development Code.
7. No private streets shall be allowed in the Riverside District.
8. Developers will be allowed and encouraged to construct green street features on local and collector streets to reduce the amount of stormwater entering local rivers and streams, reduce demand on the city's infrastructure and improve water quality. Modifications to street standards will be allowed without a variance at the subdivision phase if a developer proposes green street features that are approved by the City Engineer and Planning Commission.
9. Where cul-de-sacs are constructed, they shall comply with the maximum length standards in Section 2.202 of the City of Dundee Development Code. A pedestrian and bicycle connection may be required between the end of the cul-de-sac and the nearest local street to provide connectivity.
10. Sidewalks shall be provided along both sides of all streets. Where a wider multi-use path is provided (for example, on the side of the Parkway Collector adjacent to the Bypass or on the urban side of the Fulquartz Landing Road frontage), the multi-use path shall replace the required sidewalk.
11. A pedestrian/bicycle pathway shall be accommodated under the Bypass structure located near 10th Street to provide an ADA accessible connection between Dundee and the Riverside District. The City of Dundee may

pursue grants to fund construction of this undercrossing. ODOT has committed that the Bypass design will accommodate the pedestrian/bicycle pathway.

## Water, Wastewater and Stormwater

Water, wastewater and stormwater facilities that are needed to support proposed development in the Riverside District will require further planning of needed improvements, updates of city system development charges (SDCs) and other fees, and coordination between the city and property owners regarding the timing and funding of infrastructure improvements. The types of improvements required to serve the Riverside District are described in more detail in the Land Use Alternatives Report in Appendix B7 and the Cost Estimates, Funding Strategies and Responsibilities document Appendix B9 (adopted by reference).

1. Public facilities for the Riverside District shall be planned, designed and constructed in accordance with adopted Public Facility Master Plans for water, wastewater and stormwater.
2. Each subdivision or development application shall show that its water, wastewater and stormwater requirements can be met adequately by infrastructure that is in place or will be in place at the time of occupancy. The City Engineer shall review and confirm the adequacy of infrastructure plans prior to City approval of the land use application. As a general policy, the City requires that developers bear the cost of infrastructure improvements required to support their project.
3. As authorized by ORS 94.504, the City may require City Council approval of Development Agreements as a condition of subdivision or development application approval to allow the city and an applicant to coordinate in the provision of facilities to serve the development. The Development Agreement may require specific performance conditions for development of the property. These performance conditions may include, but are not limited to, construction of public facilities, dedication or reservation of land for right-of-ways, easements, or parks, or other conditions proper for the development.
4. Planning for water use should incorporate techniques and systems for water reuse and conservation to the greatest degree practical, including potential reuse of wastewater for irrigation or other purposes.
5. The City will encourage natural stormwater drainage systems designed to manage and filter as much stormwater on site as reasonably possible and to incorporate natural drainage and management techniques. Examples and illustrations of low impact development approaches that may be appropriate in the Riverside District are included in the Background Conditions Report, Charrette Report, and Land Use Alternatives Report in Appendix B.

## Parks, Open Space and Trails

Figure 1 illustrates the park and open space framework for the Riverside District, including planned neighborhood parks, a regional riverside park, a nature park, and a connected trail system to access the river and connect the various subareas. Figure 6 highlights natural resource and riparian areas and identifies the general location of the riparian buffer (50 foot width) and green seam buffer (30 foot width).

1. A minimum of three neighborhood parks shall be established within Subareas C, D, and F as shown in Figures 1 and 2 of the Riverside District Master Plan and based on the housing target of ~~970~~ 906 dwelling units. The specific location and size of each neighborhood park shall be refined through the detailed master plan and subdivision process. However, each neighborhood park site shall be consistent with the location and size criteria in the adopted Dundee Parks and Open Space Master Plan and the Neighborhood park sites shall be developed in accordance with the provisions of the Parks and Open Space Zone (Chapter 2.111) of the Development Code. The City shall collaborate with Chehalem Parks and Recreation District (e.g. IGA) on Riverside District park and trail issues such as dedication, improvements, standards, maintenance, etc.

pursue grants to fund construction of this undercrossing. ODOT has committed that the Bypass design will accommodate the pedestrian/bicycle pathway.

## Water, Wastewater and Stormwater

Water, wastewater and stormwater facilities that are needed to support proposed development in the Riverside District will require further planning of needed improvements, updates of city system development charges (SDCs) and other fees, and coordination between the city and property owners regarding the timing and funding of infrastructure improvements. The types of improvements required to serve the Riverside District are described in more detail in the Land Use Alternatives Report in Appendix B7 and the Cost Estimates, Funding Strategies and Responsibilities document Appendix B9 (adopted by reference).

1. Public facilities for the Riverside District shall be planned, designed and constructed in accordance with adopted Public Facility Master Plans for water, wastewater and stormwater.
2. Each subdivision or development application shall show that its water, wastewater and stormwater requirements can be met adequately by infrastructure that is in place or will be in place at the time of occupancy. The City Engineer shall review and confirm the adequacy of infrastructure plans prior to City approval of the land use application. As a general policy, the City requires that developers bear the cost of infrastructure improvements required to support their project.
3. As authorized by ORS 94.504, the City may require City Council approval of Development Agreements as a condition of subdivision or development application approval to allow the city and an applicant to coordinate in the provision of facilities to serve the development. The Development Agreement may require specific performance conditions for development of the property. These performance conditions may include, but are not limited to, construction of public facilities, dedication or reservation of land for right-of-ways, easements, or parks, or other conditions proper for the development.
4. Planning for water use should incorporate techniques and systems for water reuse and conservation to the greatest degree practical, including potential reuse of wastewater for irrigation or other purposes.
5. The City will encourage natural stormwater drainage systems designed to manage and filter as much stormwater on site as reasonably possible and to incorporate natural drainage and management techniques. Examples and illustrations of low impact development approaches that may be appropriate in the Riverside District are included in the Background Conditions Report, Charrette Report, and Land Use Alternatives Report in Appendix B.

## Parks, Open Space and Trails

Figure 1 illustrates the park and open space framework for the Riverside District, including planned neighborhood parks, a regional riverside park, a nature park, and a connected trail system to access the river and connect the various subareas. Figure 6 highlights natural resource and riparian areas and identifies the general location of the riparian buffer (50 foot width) and green seam buffer (30 foot width).

1. A minimum of three neighborhood parks shall be established within Subareas C, D, and F as shown in Figures 1 and 2 of the Riverside District Master Plan and based on the housing target of ~~970~~ 906 dwelling units. The specific location and size of each neighborhood park shall be refined through the detailed master plan and subdivision process. However, each neighborhood park site shall be consistent with the location and size criteria in the adopted Dundee Parks and Open Space Master Plan and the Neighborhood park sites shall be developed in accordance with the provisions of the Parks and Open Space Zone (Chapter 2.111) of the Development Code. The City shall collaborate with Chehalem Parks and Recreation District (e.g. IGA) on Riverside District park and trail issues such as dedication, improvements, standards, maintenance, etc.

The following tables summarize the assumptions and analysis used to estimate thresholds for needed transportation improvements within and outside the study area. Proposed land uses have been translated into total numbers of trips by subarea or a combination of subareas. These trips have in turn been distributed and assigned to the study area roadways.

***Table 3 – Riverside District Land Uses by Subarea***

| Land Use | Subarea A | Subarea B | Subarea C | Subarea D | Subarea E | Subarea F | Subarea G | Total |
|---|---|---|---|---|---|---|---|---|
| Single family residential (units) | 96 | 0 | ~~24~~ 0 | 222 | 0 | 415 | 0 | ~~757~~733 |
| Multifamily residential (units) | 14 | 0 | ~~40~~ 0 | 55 | 0 | 104 | 0 | ~~213~~173 |
| Commercial and retail (sq ft) | 131,500[5] | 0 | 0 | 91,500[3] | 0 | 0 | 0 | 223,000 |
| Public (sq ft) | 0 | 0 | 51,000 | 0 | 0 | 0 | 0 | _____ |
| Golf course[4] (holes) | 0 | 0 | 0 | 9 | 0 | 0 | 0 | N/A |
| Light industrial[2] (sq ft) | 0 | 204,000 | 0 | 0 | 0 | 0 | 0 | 204,000 |
| Neighborhood park (acres) | 4 | 0 | 0 | 2 | 0 | 2 | 0 | 8 |
| Regional & nature park (acres) | 0 | 0 | 0 | 0 | 25 | 0 | 30 | 55 |

[1] Golf course includes 9-holes and a club house/pro shop.
[2] Light Industrial includes wine tasting and production.
[3] Overall square-footage includes 50 hotel rooms.
[4] The clubhouse is located in Subarea D.
[5] The 14 multifamily residential units represent the remaining 16,000 square-feet of commercial and retail space shown in Table 2 above.

Table 5 shows the estimated weekday p.m. peak hour trips generated by each land use within subareas.

***Table 5 – Estimated Riverside District Trip Generation – Weekday PM Peak Hour***

| Land Use | Subareas A | | | Subarea B | | | Subarea C | | | Subarea D | | | Subarea F | | | Total | | |
|---|---|---|---|---|---|---|---|---|---|---|---|---|---|---|---|---|---|---|
| | In | Out | Total | In | Out | Total | In | Out | Total | In | Out | Total | In | Out | Total | In | Out | Total |
| Single family residential | 67 | 39 | 106 | 0 | 0 | 0 | ~~16~~ | ~~10~~ | ~~26~~ | 154 | 90 | 244 | 288 | 169 | 457 | ~~525~~ 509 | ~~308~~ 298 | ~~833~~ 807 |
| Multifamily residential | 7 | 4 | 11 | 0 | 0 | 0 | ~~21~~ | ~~10~~ | ~~31~~ | 29 | 14 | 43 | 54 | 27 | 81 | ~~111~~ | ~~55~~ | ~~166~~ |
| Elementary School (350 students) | 0 | 0 | 0 | 0 | 0 | 0 | 29 | 31 | 60 | 0 | 0 | 0 | 0 | 0 | 0 | 29 | 31 | 60 |
| Hotel use | 0 | 0 | 0 | 0 | 0 | 0 | 0 | 0 | 0 | 16 | 14 | 30 | 0 | 0 | 0 | 16 | 14 | 30 |
| Commercial and retail | 269 | 280 | 549 | 0 | 0 | 0 | 0 | 0 | 0 | 28 | 29 | 57 | 0 | 0 | 0 | 297 | 309 | 606 |
| *- Internal* | *(110)* | *(110)* | *(220)* | *0* | *0* | *0* | *0* | *0* | *0* | *(11)* | *(11)* | *(22)* | *0* | *0* | *0* | *(121)* | *(121)* | *(242)* |
| *- Pass by* | *(16)* | *(16)* | *(32)* | *0* | *0* | *0* | *0* | *0* | *0* | *(2)* | *(2)* | *(4)* | *0* | *0* | *0* | *(18)* | *(18)* | *(36)* |
| Golf course[1] | 0 | 0 | 0 | 0 | 0 | 0 | 0 | 0 | 0 | 11 | 14 | 25 | 0 | 0 | 0 | 11 | 14 | 25 |
| Light industrial[2] | 0 | 0 | 0 | 12 | 87 | 99 | 0 | 0 | 0 | 0 | 0 | 0 | 0 | 0 | 0 | 12 | 87 | 99 |
| Neighborhood parks | 1 | 2 | 3 | 0 | 0 | 0 | 0 | 0 | 0 | 0 | 1 | 1 | 0 | 1 | 1 | 1 | 4 | 5 |
| Regional & nature parks[3] | 0 | 0 | 0 | 3 | 4 | 7 | 0 | 0 | 0 | 3 | 4 | 7 | 0 | 0 | 0 | 6 | 8 | 14 |
| **Total** | **218** | **199** | **417** | **15** | **91** | **106** | ~~37~~ 29 | ~~20~~ 31 | ~~57~~ 60 | **228** | **153** | **381** | **342** | **197** | **539** | ~~840~~ 832 | ~~660~~ 671 | ~~1500~~ 1503 |

[1] Golf course is assumed to include 9-holes and a club house/pro shop.
[2] Light Industrial is assumed to include wine tasting and production.
[3] The trip generation estimates for Subareas G and E are included in Subareas B and D, respectively. These parks generate a combined estimated 23 trips during the weekday p.m. peak hour.

Table 6 shows the estimated trip distribution of the weekday p.m. peak hour trips generated by each subarea shown in Table 5 onto the major roadways in the study area. The percent distribution (Dist.) represents the proportion of overall trips from each subarea expected to use the specified roadway with and without the 5th Street extension.

***Table 6 – Estimated Trip Distribution by Subarea***

| Roadway | Subarea A | | Subarea B[1] | | Subarea C | | Subarea D[1] | | Subarea F | | Total ADT |
|---|---|---|---|---|---|---|---|---|---|---|---|
| | Dist. | Trips | Dist. | Trips | Dist. | Trips | Dist. | Trips | Dist. | Trips | |
| 5th Street via Edwards Road | 50% | 209 | 50% | 53 | 50% | 29 | 50% | 191 | 0% | 0 | 482 |
| 10th Street via Edwards Road | 25% | 104 | 0% | 0 | 25% | 14 | 0% | 0 | 0% | 0 | 118 |
| Parks Drive via Fulquartz Landing | 25% | 104 | 50% | 53 | 25% | 14 | 50% | 190 | 100% | 539 | 900 |
| ***Total*** | ***100%*** | ***417*** | ***100%*** | ***106*** | ***100%*** | ***57*** | ***100%*** | ***381*** | ***100%*** | ***539*** | ***1500*** |

[1] The estimated trip distribution pattern for Subareas G and E were assumed to be consistent with Subareas B and D, respectively.

In addition to the trips shown in Table 6, approximately 25 percent of the trips from subareas A and C and 100 percent of the trips from subareas C and D are expected to use 8th Street to access Edwards Road. The remaining trips from subareas A and C are expected to access Edwards Road via the local street network.

## Attachment 7:Conceptual Site Plan

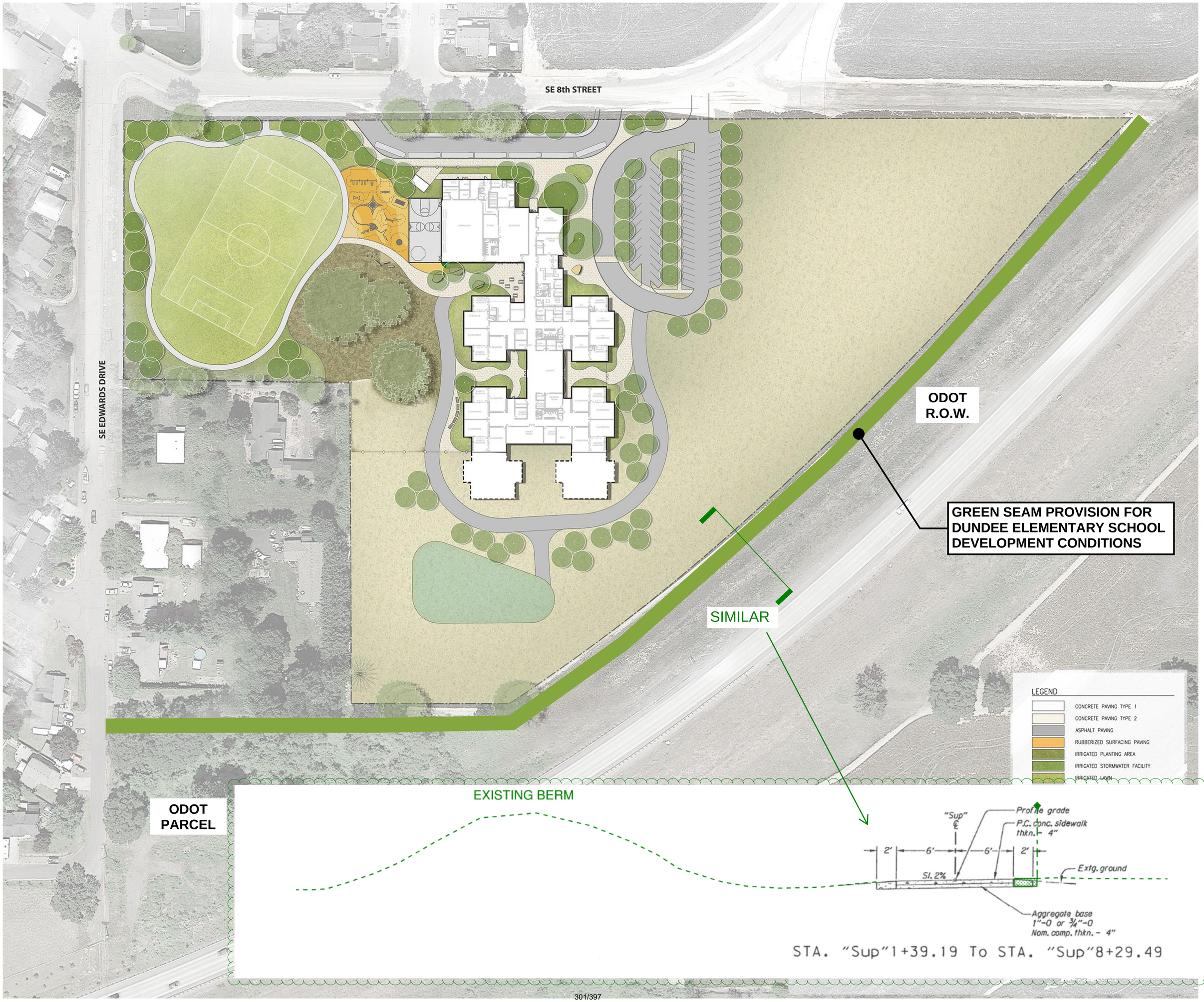
SE 8th STREET
SE EDWARDS DRIVE
ODOT R.O.W.
GREEN SEAM PROVISION FOR DUNDEE ELEMENTARY SCHOOL DEVELOPMENT CONDITIONS
SIMILAR
LEGEND
CONCRETE PAVING TYPE 1
CONCRETE PAVING TYPE 2
ASPHALT PAVING
RUBBERIZED SURFACING PAVING
IRRIGATED PLANTING AREA
IRRIGATED STORMWATER FACILITY
IRRIGATED LAWN
ODOT PARCEL
EXISTING BERM
"Sup" ℄
Profile grade
P.C. conc. sidewalk thkn. - 4"
2'
6'
6'
2'
Sl. 2%
Extg. ground
Aggregate base 1"-0 or ¾"-0 Nom. comp. thkn. - 4"
STA. "Sup"1+39.19 To STA. "Sup"8+29.49

# CITY OF DUNDEE CITY COUNCIL
# Staff Report
# Appeal of a Planning Commission Order Denying a Conditional Use Permit and Short Term Rental
# File No.: AP 2022-22 (STR/CU 2022-10)

**Request:** An appeal by the applicant of the Planning Commission's denial of a Conditional Use Permit and a Short Term Rental Application to allow a Standard short term rental (STR) use on a property contiguous to an existing STR on the same side of the street. A Standard STR is a single family dwelling for rent for 30 or more total days in a calendar year (Dundee Municipal Code, 17.203.240, C, 1).

This staff report is based on the applicant's revised materials dated May 31, 2022 and the appeal materials dated August 9 and October 27, 2022.

| **Project Information** | |
|---|---|
| **Applicant/Owner** | John Bridges, 515 E. First St., Newberg, representing Jonathan Pohl & Ana Montalvan, 425 Dogwood Drive (Anew Properties, LLC) |
| **Location** | 425 SW Dogwood Drive |
| **Tax Lot/Size** | 3326AD-02300 / 8,650 sq. ft. (86.67' x 99.80') |
| **Zoning** | R-1 |
| **Applicable Criteria** | Dundee Municipal Code, Section 17.203.240, E (STR) & 17.040.030, A, 1-4 (CUP). |
| **Public Hearing Date** | December 6, 2022 |

## Attachments:

1. Planning Commission Order, 8/1/22, with its Exhibit "A" (Criteria and Findings).

2. The CUP and STR application forms and their supporting information.

3. Comments from owners of properties within 200 feet of the subject property for the Commission's hearing (Carey and Pedersen).

4. Appeal letter, 8/9/22, with the Appeal Application and its Exhibit "A" (reasons for the appeal).

5. Appeal letter, 10/27/22, with its five enclosures.

6. Comments from owners of properties within 200 feet of the subject property for the City Council's appeal hearing (Carey, Sundeen and Pedersen).

## Public Notice:

Public notice was mailed to owners of properties within 200 feet of the subject property on November 15, 2022, and posted on the property November 15, 2022.

## Location Map

The 8,650 square foot subject property is outlined in red (425 SW Dogwood Drive – Tax Lot 2300). The existing STR approved per case STR 2021-17) is on Tax Lot 2400 abutting to the north (395 SW Dogwood Drive). According to a party who submitted comments as part of the process (see below), other STR's (vacation rentals) are on Tax Lot 2700 to the southeast of the subject property and Tax Lot 2807 across SW 3rd Street to the south. Since the beginning of this application process, the Vacation Rental on Tax Lot 2807 has reverted to a single family dwelling.

## Application Background and Process:

The proposed STR at 425 SW Dogwood would be contiguous to an existing STR on the property to the north at 395 SW Dogwood Drive (STR 2021-17). In accordance with the Dundee Municipal Code, Section 17.203.240, J, 9, no Type II STR (a Standard STR) can be located "adjacent (contiguous to the property on the same side of the street) to any permitted Type II STR unit." However, Subsection J, 9, goes on to state, "The planning commission may approve contiguous Type II STR permits as a conditional use permit with criteria as outlined in subsection (H) of this section." Note the reference to "(H)" should be "J" because "J" includes the STR Standards and "H" is Overnight Occupancy Limits.

The quoted language refers to the Commission approving contiguous STR's "as a conditional use permit" and then it specifically says "with criteria as outlined in subsection (H) [ J ] of this section." At the Planning Commission public hearing the Planning Commission determined, and the applicant agreed, the language calls for the conditional use process with its approval criteria, i.e., a Type III process with a Commission hearing, and it calls for the STR process with its standards as the approval criteria.

The applicant initially submitted a CUP application form and addressed the four CUP criteria. The applicant also submitted a STR application and addressed the STR standards. Included as attachments are the applicant's initial CUP and STR applications.

## Appellant's October 27, 2022 Letter and Exhibits 1-5

Mr. John Bridges, Brown, Tarlow, Bridges & Palmer, PC, represents Jonathan Pohl & Ana Montalvan, the owners of the subject property at 425 SW Dogwood Drive. Mr. Bridges' August 9, 2022 appeal letter and its Exhibit "A" and his October 27, 2022 letter and Exhibits 1 – 5 are attached to this staff report.

## Planning Commission Order and It's Exhibit A, Criteria and Findings

The August 1, 2022 Planning Commission (PC) Order is attached. The PC Order's denial was based on one CUP criterion not being met and one STR criterion not being met.

CUP CRITERIA.

When the PC addressed the CUP approval criteria, the PC found Criterion 2 was not met regarding negative impacts of the proposed use on adjacent properties (see p. 3 of 11 of the PC Order). The Commission was concerned about the effect on the neighborhood of not only the subject STR becoming the 4th STR in the neighborhood, but of the accumulative effect of the 3 STR's plus the new proposed STR. Since the PC Order, as noted above, the STR on Tax Lot 2807 had reverted to a single family dwelling.

The PC Order, Exhibit A, p. 4 of 11, shows CUP criterion #2 was not met. Criterion 2 states:

> ***2. The negative impacts of the proposed use, if any, on adjacent properties and on the public can be mitigated through application of other code standards, or other reasonable conditions of approval***.

FINDINGS: The PC Order's finding stated, "The applicant's March 28, 2022 letter responded to Criterion A, 2, as follows." The applicant's response is quoted below.

> There are minimal, if any, negative impacts on Applicants proposed use to use the home as a short-term rental property. Any concerns related to a over density of short term rental property in one location has already been mitigated and addressed in the Dundee Municipal Code which as this applicants is doing necessitates a CUP so that the City of Dundee can analyze whether the density of multiple Short-term rentals in one area is appropriate or not. If there is a concern about the two homes being rented together, the applicant would accept a condition preventing that.

The PC Order's Finding concluded the following:

> The Planning Commission found the STR standards do not adequately mitigate the negative impacts on adjacent properties and on the community. If approved, there would be two STR's at 395 and 425 SW Dogwood Drive and an existing vacation rental at 172 SW Hawthorne which would be a dense

concentration of STR's and vacation rentals in a small area that would negatively affect the area. Criterion 17.404.030, A, 2, is not met.

The Commission found the other 3 CUP criteria were met.

STR CRITERIA.

When the PC addressed the STR approval criteria, the PC found Criterion 1 was not met regarding the proposed STR presenting "any burden on neighbors to the property" (see p. 5 of 11 of the PC Order). The Commission expressed concern with the density of STR's in the area and concluded, if the requested applications are approved, the three STR's/Vacation Rentals would burden the neighbors and change the neighborhood.

The PC Order, Exhibit A, p. 5 of 11, shows STR criterion #1 was not met. Criterion 1 states:

> ***1. The proposed STR will not present any burden on neighbors to the property. Any mitigations added to address concerns have been included as requirements of the permit. Mitigation may be required to the satisfaction of city staff.***
>
> FINDINGS: The applicant's March 28, 2022, and May 31, 2022 letters and materials did not address Criterion 17.203.240, E, 1. The applicant's oral testimony indicated the STR standards will mitigate any burdens on the neighbors. The applicant testified Lifestyle Homes is the rental agency for 395 SW Dogwood Drive and would be the agency for the subject property and, therefore, would be able to not rent both STR's at the same time to the same renters. The applicant would accept a condition of approval prohibiting the same renters from renting both STR's at 395 and 425 SW Dogwood Drive at the same time.
>
> The July 10, 2022 Philip Carey comment letter included a map showing the location of the three existing STR's in the neighborhood. They are at 395 SW Dogwood Drive (Tax Lot 2400) abutting the subject property to the north, 172 SW Hawthorne Court to the southeast (Tax Lot 2700) and 760 SW 5th on the south side of SW 5th (Tax Lot 2807). Steve Morris, the owner of 760 SW 5th, testified orally at the public hearing that he is in the process of moving back to 760 SW 5th and will live in the house, therefore, the previously approved Vacation Rental will no longer be in operation.
>
> The number of existing STR's in the immediate area is three, but one will soon per the testimony revert to its single family dwelling use. Then, if the requested applications are approved, the number of existing STR's in the immediate area would remain at three.
>
> The Commission expressed concern with the density of STR's in the area. The STR criterion allows the Commission to consider the burden on neighbors and the conditional use permit criteria allow the Commission to look beyond the immediate property and consider the overall impact on the community.
>
> The adjacent lot to the north at 395 SW Dogwood Drive is an existing STR approved per STR 2021-17. The vacation rental at 172 SW Hawthorne is in the same block. The Commission concluded, if the requested applications are approved, the three STR's/Vacation Rentals would burden the neighbors and change the neighborhood.

The PC Order's Finding concluded the following:

The Commission determined the concentration of STR's is a burden because it changes the neighborhood and the impacts of the two adjacent STR's cannot be mitigated by the STR standards, therefore, Criterion 17.203.240, E, 1, is not met.

## Applicant's Appeal Application and October 27, 2022 Letter and Enclosures

The applicant appealed the August 1, 2022 PC Order (see 8/9/22 appeal letter, appeal application and its Exhibit "A" attached). Exhibit "A" stated, in part:

> The applicant is filing the appeal therefore they have standing. The applicant demonstrated substantial evidence supporting all of the criteria. The Planning Commission inappropriately assigned a heighten burden for the application. In addition to applying the Short-Term Rental Criteria they also required the applicaticn of the Conditional use criteria. The Planning Commission also assumed facts that were not in evidence while engaged in deliberation. Those included speculating on the total number of grandfathered Short-Term Rentals, grouping of Short-Term Rentals, and oversized impacts of Short-Term Rentals.

Staff would clarify, that where the appellant's language, above, states the applicant is filing an appeal, therefore, they have standing, the language should be reversed to say, the applicant has standing because they are the applicant and they participated at the Planning Commission hearing by Mr. Bridges who testified on their behalf, therefore they have standing to appeal.

The City Council should read Exhibit "A," above because it explains why the Planning Commission erred in their decision.

The appellant's October 27 letter and its enclosures are attached. The letter listed the five enclosures and states, "Under Dundee's Ordinance the City could Approve 53 STR's. They are currently only at 17% of that limit. Obviously, as property is subdivided the number of permitted STR's goes up."

The letter asks that the letter and the enclosures be entered into the record.

The appellant's October 27 letter does not include statements tying the information in the enclosures to the unmet CUP criterion or the unmet STR criterion, but the language in the 8/9/22 Exhibit "A," above referred to "facts not in evidence while engaged in deliberation." Presumably, oral testimony at the December 6 public hearing will further explain the appellant's position.

## Comments From Nearby Property Owners Regarding the Appeal

For the appeal hearing, comments were received from three neighbors, Phillip Carey on the east side of Hawthorne Court to the east of the subject property, Elizabeth Sundeen on the west side of Dogwood Drive behind the house at 442 Dogwood Drive which is across the street from the subject property and Virginia Pedersen on the west side of Hawthorne Court. Their letters are attached.

## Staff Recommendation

After the December 6 public hearing is closed and the City Council is in the deliberation phase, the City Council should:

1. Consider the staff report, the CUP application, the STR application, the two comment letters considered by the Planning Commission at their hearing, the appellant's August 9 and October 27 letters, the three comment letters submitted for the appeal hearing and the public testimony at the December 6 hearing.

2. Deliberate and make findings. Tentative findings are not attached to this staff report because staff does not know what the City Council decision will be and the reasons for the decision.

Where the City Council upholds the Planning Commission Order, the Council can use the findings (reasons) set forth in Exhibit "A" of the Planning Commission Order, and augment those reasons if desired. Staff will prepare a City Council Order for the Mayor to sign consistent with the City Council's decision. The Order will include Findings explaining the Council's reasons for upholding the PC Order.

Where the City Council reverses the Planning Commission Order, the Council must provide reasons for the reversal. Staff will prepare a City Council Order for the Mayor to sign consistent with the City Council's decision. The Order will include Findings explaining the Council's reasons for reversing the Planning Commission Order.

Where the City Council reverses the Planning Commission Order, staff recommends the approval of the conditional use permit and the short term rental applications be subject to the following five conditions of approval because the five conditions require certain items be included in the House Rules. The staff report to the Planning Commission for the Commission's public hearing included Findings concluding the application materials did not include certain statements in the proposed House Rules (conditions of approval 1 – 3), the proposed "Welcome to Our Neighborhood" document included erroneous references to the McMinnville, Carlton, Dayton and Amity Police Departments (condition of approval 4), and a statement must be submitted to the City regarding the maintenance of a Guest Register

1. Before the Business License is issued and before the dwelling can be used or occupied as a short term rental, the applicant shall submit revised House Rules stating the renters must comply with the Dundee Municipal Code, Title 6, regarding pets.

2. Before the Business License is issued and before the dwelling can be used or occupied as a short term rental, the applicant shall submit revised House Rules stating, "The premises of the Short Term Rental may not include any occupied recreational vehicle, trailer, tent, or other temporary shelter during the rental occupancy. Tents, including event tents, are not permitted.

3. Before the Business License is issued and before the dwelling can be used or occupied as a short term rental, the applicant shall submit revised House Rules stating, "All activities associated with the Short Term Rental shall not cause a nuisance as defined in Chapter 8.16, Dundee Municipal Code."

4. Before the Business License is issued and before the dwelling can be used or occupied as a short term rental, the applicant shall submit to the City a revised document "Welcome to Our Neighborhood" with the McMinnville, Carlton, Dayton and Amity Police Departments and their phone numbers deleted.

5. Before the Business License is issued and before the dwelling can be used or occupied as a short term rental, the applicant shall submit to the City a statement that the applicant will maintain a guest register listing each tenant of the STR along with the number of dwelling occupancy days consistent with the Dundee Municipal Code, Section 17.203.240, J, 8.

3. Make a motion affirming or reversing, with the above conditions of approval, the Planning Commission Order.

ATTACHMENT 1

CITY of DUNDEE Oregon

# DUNDEE PLANNING COMMISSION ORDER
## FILE NO. STR / CU 2022-10

AN ORDER DENYING A CONDITIONAL USE PERMIT APPLICATION AND A STANDARD SHORT TERM RENTAL APPLICATION ON A LOT ADJACENT (CONTIGUOUS TO A PROPERTY ON THE SAME SIDE OF THE STREET) TO AN EXISTING STANDARD SHORT TERM RENTAL FOR PROPERTY AT 425 SW DOGWOOD DRIVE, TAX LOT 3326AD, 02300.

RECITALS:

1. John Bridges of Brown, Tarlow, Bridges & Palmer, PC, Newberg, submitted a Standard Short Term Rental application and a Conditional Use Permit application to allow a Standard Short Term Rental at 425 SW Dogwood Drive (3326AD, 02300) on a lot adjacent (contiguous to a property on the same side of SW Dogwood Drive) to an existing Standard Short Term Rental at 395 SW Dogwood Drive.

2. The subject property is 8,650 square feet (86.67' x 99.80') with driveway access on SW Dogwood Drive.

3. The subject property is in the R-1 District which allows Standard Short Term Rentals.

4. The Dundee Planning Commission held a public hearing to receive public oral and written testimony and consider the proposal on July 20, 2022.

5. At the July 20, 2022 public hearing, the Planning Commission heard a summary of the staff report, considered the applicant's testimony and the public testimony, closed the public hearing and deliberated. The Planning Commission finds the Conditional Use Permit Criterion 17.404.030, A, 2, and the Short Term Rental Criterion 17.203.240, E, 1, are not met, therefore the Conditional Use Permit and Short Term Rental Applications do not meet the applicable criteria for approval.

**The Dundee Planning Commission orders the following:**

The Conditional Use Permit and Short Term Rental Applications to allow a Standard Short Term Rental at 425 SW Dogwood Drive are hereby denied. This Order is based on the July 20, 2022 public testimony and the July 20, 2022 staff report as changed by the findings developed by the Planning Commission during deliberation on July 20, 2022 and shown in Exhibit "A." Exhibit "A" is attached and by this reference incorporated herein.

ADOPTED BY THE DUNDEE PLANNING COMMISSION THIS 20th DAY OF JULY 2022:

AYE: 5 NAY: 1 ABSTAIN: 0 ABSENT: 1

SIGNED: _____ 8/1/22
Ed Carlisle, Planning Commission Chair Date

ATTEST: _____ 8/1/22
Steve Dahl, City Administrator Date

**EXHIBIT A**
**CRITERIA & FINDINGS**
**CU / STR 2022-10**

Note: The Dundee Municipal Code criteria are written in ***bolded italic*** font and the findings are written in regular font. The Development Code criteria are presented followed by the findings for each criterion.

## *Conditional Use Permit Criteria*

***17.404.030, A, Use Criteria.***

***1. The site size, dimensions, location, topography and access are adequate for the needs of the proposed use, considering the proposed building mass, parking, traffic, noise, vibration, exhaust/emissions, light, glare, erosion, odor, dust, visibility, safety, and aesthetic considerations.***

FINDINGS: The applicant's March 28, 2022 letter provided Background Facts as follows.

A) Background Facts

| | | |
|---|---|---|
| 1. | Parcel size: | 8,651 sq ft. |
| 2. | Access: | Access to this Parcel is provided by SW Dogwood Drive |
| 3. | Onsite land use and zoning: | The property currently houses a large residential home. The property is entirely zoned R1. |
| 4. | Surrounding: | The surrounding area is zoned R1. |
| 5. | Water: | Water is supplied by the City of Dundee. |
| 6. | Sewage Disposal: | Waste water disposal is supplied by the City of Dundee. |
| 7. | Fire Protection: | This Parcel is within the City of Dundee Fire protection District. |
| 8. | Flood Hazard: | This Parcel is outside the flood way and new portions of property are within the 100 year flood plain or flood way. |

The applicant's March 28, 2022 letter responded to Criterion A, 1, as follows.

The applicant's property consists of a 4,112 sq ft home that consists of five (5) bedrooms and three (3) bathrooms. This home sits on a 8,651 sq ft lot in the North part of the City of Dundee. The home was built in 1990 and all of the dimensional standards and setback requirements as established in 1990 per the Dundee Municipal Code have been satisfied. The property is surrounded by other single family homes of similar size and are all in the same zone of R1. The topography, soil, and location of this property make it suitable for its current use and the proposed use of its short-term rental property. The ingress and egress are provided via SW Dogwood Drive which is also suitable for the properties current use and proposed use. The property has room for six (6) off street parking spots.

The Planning Commission found Criterion 17.404.030, A, 1, is met.

***2. The negative impacts of the proposed use, if any, on adjacent properties and on the public can be mitigated through application of other code standards, or other reasonable conditions of approval.***

FINDINGS: The applicant's March 28, 2022 letter responded to Criterion A, 2, as follows.

There are minimal, if any, negative impacts on Applicants proposed use to use the home as a short-term rental property. Any concerns related to a over density of short term rental property in one location has already been mitigated and addressed in the Dundee Municipal Code which as this applicants is doing necessitates a CUP so that the City of Dundee can analyze whether the density of multiple Short-term rentals in one area is appropriate or not. If there is a concern about the two homes being rented together, the applicant would accept a condition preventing that.

The Planning Commission found the STR standards do not adequately mitigate the negative impacts on adjacent properties and on the community. If approved, there would be two STR's at 395 and 425 SW Dogwood Drive and an existing vacation rental at 172 SW Hawthorne which would be a dense concentration of STR's and vacation rentals in a small area that would negatively affect the area. Criterion 17.404.030, A, 2, is not met.

***3. All required public facilities, including water, sanitary sewer, and streets, have adequate capacity or are to be improved to serve the proposal, consistent with city standards.***

FINDINGS: The applicant's March 28, 2022 letter responded to Criterion A, 3, as follows.

Portland General Electric currently provides electricity to the applicants property. Water and Sewer are currently provided by the City of Dundee. The Applicants proposed use will not over burden those systems considering that the Applicants do not reside in the property as their primary residential home instead using it occasionally as a vacation home. It's current and proposed use will have less impact on the system than a single family occupancy.

The Planning Commission found Criterion 17.404.030, A, 3, is met.

***4. A conditional use permit shall not allow a use that is prohibited or not expressly allowed under DMC Division 17.200; nor shall a conditional use permit grant a variance without a variance application being reviewed with the conditional use application.***

FINDINGS: The applicant's March 28, 2022 letter responded to Criterion A, 4, as follows.

Applicants acknowledge that the City of Dundee approval of a Conditional Use Permit in this instant will not grant a variance and that any need for a variance a on this subject property will require an application to be submitted.

The Planning Commission found Criterion 17.404.030, A, 4, is met.

## *Standard Short Term Rental Criteria*

***17.203.240, E. Criteria. For both Type I, infrequent short-term rentals, and Type II standard short-term rentals, the criteria are:***

***1. The proposed STR will not present any burden on neighbors to the property. Any mitigations added to address concerns have been included as requirements of the permit. Mitigation may be required to the satisfaction of city staff.***

FINDINGS: The applicant's March 28, 2022, and May 31, 2022 letters and materials did not address Criterion 17.203.240, E, 1. The applicant's oral testimony indicated the STR standards will mitigate any burdens on the neighbors. The applicant testified Lifestyle Homes is the rental agency for 395 SW Dogwood Drive and would be the agency for the subject property and, therefore, would be able to not rent both STR's at the same time to the same renters. The applicant would accept a condition of approval prohibiting the same renters from renting both STR's at 395 and 425 SW Dogwood Drive at the same time.

The July 10, 2022 Philip Carey comment letter included a map showing the location of the three existing STR's in the neighborhood. They are at 395 SW Dogwood Drive (Tax Lot 2400) abutting the subject property to the north, 172 SW Hawthorne Court to the southeast (Tax Lot 2700) and 760 SW 5$^{th}$ on the south side of SW 5th (Tax Lot 2807). Steve Morris, the owner of 760 SW 5$^{th}$, testified orally at the public hearing that he is in the process of moving back to 760 SW 5$^{th}$ and will live in the house, therefore, the previously approved Vacation Rental will no longer be in operation.

The number of existing STR's in the immediate area is three, but one will soon per the testimony revert to its single family dwelling use. Then, if the requested applications are approved, the number of existing STR's in the immediate area would remain at three.

The Commission expressed concern with the density of STR's in the area. The STR criterion allows the Commission to consider the burden on neighbors and the conditional use permit criteria allow the Commission to look beyond the immediate property and consider the overall impact on the community.

The adjacent lot to the north at 395 SW Dogwood Drive is an existing STR approved per STR 2021-17. The vacation rental at 172 SW Hawthorne is in the same block. The Commission concluded, if the requested applications are approved, the three STR's/Vacation Rentals would burden the neighbors and change the neighborhood.

The Commission determined the concentration of STR's is a burden because it changes the neighborhood and the impacts of the two adjacent STR's cannot be mitigated by the STR standards, therefore, Criterion 17.203.240, E, 1, is not met.

**2. The applicant has applied for a business license.**

FINDINGS: The application materials include an application for a business license and a Transient Room Tax Registration Form. Criterion 17.203.240, E, 2, is met.

**3. All standards from subsection (J) of this section have been met.**

FINDINGS: The standards from Subsection 17.203.240, J, follow.

***17.203.240, J. Standards.***

**1. Parking. At least two off-street parking spaces (located on the property) must be provided. In addition, one STR parking space may be on-street. All overnight and visiting guests must park in designated parking areas (as shown on the site plan). No unauthorized on-street parking is permitted.**

The applicant's May 28, 2022 letter, p. 1, states in part:

> There are at least six parking spaces available for off street parking.

FINDINGS: The application materials include an oblique air photo and a first-floor floor plan showing a "circle driveway" (two access points onto SW Dogwood Dr.). Google street view appears to show an area on the south side of the house where a vehicle could also park. The driveway on the subject property includes sufficient area for at least 2 cars which will meet the required parking. Criterion 17.203.240, J, 1, is met.

**2. Trash and Recycling Facilities. The owner shall provide for and maintain regular trash collection. Available bins must have adequate capacity for the renters, and no uncontained garbage is allowed on the site.**

The applicant's May 28, 2022 item entitled "Welcome To Our Neighborhood," states in part:

> Please place trach in the appropriate bin outside and our maintenance will remove between each guest stay or every Tuesday if you are staying for more nights.

FINDINGS: The applicant's statement is adequate. Criterion 17.203.240, J, 2, is met.

**3. Pets. Pets shall comply with DMC Title 6.**

Neither the applicant's May 28, 2022 STR materials nor the March 31, 2022 CU materials address pets.

FINDINGS: Dundee Municipal Code, Title 6, addresses dogs, keeping of chickens, and attracting and keeping wild animals. The application materials do not address Criterion 17.203.240, J, 3. A proposed condition of approval would have required, before the Business License is issued and before the dwelling can be used or occupied as a short term rental, the applicant shall submit revised House Rules stating the renters must comply with the Dundee Municipal Code, Title 6, regarding pets. With the condition of approval, Criterion 17.203.240, J, 3, would have been met. The proposed condition of approval does not apply because the applications are denied.

**4. Noise Limits. All activities associated with the STR shall comply with the noise standards in Chapter 8.28 DMC. Any violations are to be considered nuisance violations.**

The applicant's document entitled "Welcome to Our Neighborhood" is presumed to be the House Rules. It states, in part:

> Noise outside the home is strictly prohibited between 10 PM and 7 AM.

FINDINGS: Dundee Municipal Code, 8.28, addresses noise. The application materials include the above statement regarding noise. Criterion 17.203.240, J, 4, is met.

**5. RVs and Other Temporary Shelters. The premises of the STR may not include any occupied recreational vehicle, trailer, tent, or other temporary shelter during the rental occupancy. Tents, including event tents, are not permitted.**

Neither the applicant's May 28, 2022 STR materials nor the March 31, 2022 CU materials address RV's and other temporary shelters.

FINDINGS: The application materials do not address Criterion 17.203.040, J, 5. A proposed condition of approval would have required, before the Business License is issued and before the dwelling can be used or occupied as a short term rental, the applicant shall submit revised House Rules stating, "The premises of the Short Term Rental may not include any occupied recreational vehicle, trailer, tent, or other temporary shelter during the rental occupancy. Tents, including event tents, are not permitted." With the condition of approval, Criterion 17.203.240, J, 5, would have been met. The proposed condition of approval does not apply because the applications are denied.

**6. Nuisances. All activities associated with the STR shall not cause a nuisance as defined in Chapter 8.16, Dundee Municipal Code.**

Neither the applicant's May 28, 2022 STR materials nor the March 31, 2022 CU materials address nuisances.

FINDINGS: The application materials do not address Criterion 17.203.240, J, 6. A proposed condition of approval would have required, before the Business License is issued and before the dwelling can be used or occupied as a short term rental, the applicant shall submit revised House Rules stating, "All activities associated with the Short Term Rental shall not cause a nuisance as defined in Chapter 8.16, Dundee Municipal Code. With the condition of approval, Criterion 17.203.240, J, 5, would have been met. The proposed condition of approval does not apply because the applications are denied.

**7. Posting of Information. The applicant shall keep posted a list of information about the STR adjacent to the front door inside the dwelling. At a minimum, the posting shall include the following information:**

> **a. The name and contact information for a local contact person responsible for maintenance and responding to emergencies and/or complaints.**
> **b. The current annual STR business license.**
> **c. Any requirements for the STR to ensure it complies with this code.**
> **d. The location of any safety equipment including fire extinguishers.**
> **e. The maximum number of occupants that was approved by the city.**
> **f. A list of the applicant's requirements for renters of the property (enforceable as part of this permit issuance).**

Each of 7, a, through 7, f, follow.

**a. The name and contact information for a local contact person responsible for maintenance and responding to emergencies and/or complaints.**

The applicant's May 28, 2022 letter, p. 2, states, in part:

> The application identifies that the local representative will be Lifestyle Properties, LLC.

The applicant's STR application form, p. 1, shows that Megan Carda, Manager, Lifestyle Properties, LLC, is the Local Representative at 100 North Springbrook Road, Newberg, OR 97132. 503 564-0015. megan@lifestylepropertiesoregon.06 [the "06" is an interpretation – it is not legible on the document]

The applicant's May 28, 2022 item entitled "Welcome To Our Neighborhood," states in part:

> If you have any questions during your stay, please contact Lifestyle Properties at (971)832-3399. Someone will be available 7 days a week from 9 AM to 5 PM. In case of an urgent matter outside or our operating hours, please call (503)476-9180. For emergencies, please call 911.

The applicant's May 31, 2022 item entitled "Welcome To Our Neighborhood," states in part:

> For non-emergency matters:
>
> Newberg/Dundee Policer Department – (503) 538-8321
> McMinnville Police Department – (503) 434-7307
> Carlton Police Department – (503) 852-7575
> Dayton Police Department – (937) 333-2677
> Amity Police Department – (503) 835-8606

FINDINGS: The application form shows the Local Representative (LR) is Megan Carda at Lifestyle Properties, LLC, Newberg, with a phone number and an email address. The application form's instructions explain the LR is the "person responsible for maintenance and emergencies." The LR is the party who neighbors, or other parties, would contact to report problems with the short term rental, especially problems after normal working hours including, but not limited to, improper behavior by the renters.

It is not clear why the McMinnville, Carlton, Dayton and Amity Police Departments are listed with their phone numbers. Their inclusion will create confusion on the part of the STR renters as to who to call for service. A proposed condition of approval would have required, before the Business License is issued and before the dwelling can be used or occupied as a short term rental, the applicant shall submit to the City a revised document "Welcome to Our Neighborhood" with the McMinnville, Carlton, Dayton and Amity Police Departments and their phone numbers deleted. With the condition of approval, Criterion 17.203.240, J, 7, a, would have been met. The proposed condition of approval does not apply because the applications are denied.

**b. The current annual STR business license.**

FINDINGS: The application materials include a Business License application form. Criterion 17.203.240, J, 7, b, is met.

**c. Any requirements for the STR to ensure it complies with this code.**

FINDINGS: The document entitled "Welcome to Our Neighborhood" is presumed to be the House Rules which would be posted inside the house. The House Rules state there is a limit of 8 people and it shows 7 additional bullet points, i.e., (1) the minimum age of the primary renter, (2) treat the property with care, (3) the renter and occupants must conduct themselves in a respectful manner that is not disruptive and that noise outside is prohibited from 10 PM to 7 AM, (4) smoking is prohibited, (5) events and event

related item are not permitted, (6) criminal activity is prohibited, and (7) no unauthorized parking is allowed.

Above, the Planning Commission finds conditional use permit criterion 17.404.030, A, 2, and STR criterion 17.203.240, E, 1, are not met and, therefore, chose not to determine whether the eight items ensure the proposed STR would comply with the STR standards.

**d. The location of any safety equipment including fire extinguishers.**

FINDINGS: The application materials include images showing the fire extinguisher, and smoke and carbon monoxide detectors. Criterion 17.203.240, J, 7, d, is met.

**e. The maximum number of occupants that was approved by the city.**

> **Section 17.203.240, H, states:**
>
> **H. Overnight Occupancy Limits. The maximum overnight occupancy for the STR shall be two persons per bedroom plus two additional persons; however, in no case shall the overnight occupancy exceed 10 persons, regardless of the bedroom count.**
>
> FINDINGS: The dwelling includes 5 bedrooms, thus 10 people, plus two additional persons are allowed for a total of 12, however 12 exceeds the maximum of 10. The House Rules state the maximum occupancy is "8." Criterion 17.203.240, H, is met.

**f. A list of the applicant's requirements for renters of the property (enforceable as part of this permit issuance).**

FINDINGS: The application materials include the document entitled "Welcome to Our Neighborhood," which is presumed to be the House Rules. It lists 8 bullet points which are the applicant's requirements for renters. Criterion 17.203.240, J, 7, f, is met.

**8. Guest Register. The owner or property manager shall maintain a guest register listing each tenant of the STR along with the number of dwelling occupancy days consistent with DMC 3.04.150.**

FINDINGS: The applicant's materials do not address the guest register. A proposed condition of approval would have required, before the Business License is issued and before the dwelling can be used or occupied as a short term rental, the applicant shall submit to the City a statement that the applicant will maintain a guest register listing each tenant of the STR along with the number of dwelling occupancy days consistent with the Dundee Municipal Code, Section 3.04.150. With the condition of approval, Criterion 17.203.240, J, 8, would have been met. The proposed condition of approval does not apply because the applications are denied.

**9. No Type II STR shall be located adjacent (contiguous to the property on the same side of the street) to any permitted Type II STR unit. The planning commission may approve contiguous Type II STR permits as a conditional use permit with criteria as outlined in subsection (H) of this section.**

FINDINGS: As discussed in July 20, 2022 staff report, pages 1 and 2 of the introductory information entitled "History of the Application and Process," the requested Standard STR is being reviewed through the conditional use permit Type III process where the Planning Commission holds a public hearing and is the decision authority. The conditional use permit criteria and the STR criteria in Subsection 17.203.240, E, must be met. Note the reference to "(H)" above is a typo and it should be "J."

The applicant requests the Commission approve the proposed conditional use permit and STR applications which would allow a STR adjacent to a previously approved STR per case STR 2021-17 on the property to the north. Criterion 17.203.240, J, 9, is met.

**10. STRs are allowed in any dwelling unit in a residential zone or the agriculture (A) zone except multifamily dwellings and accessory dwelling units. An owner shall not rent out a main house while they live in an accessory dwelling unit.**

FINDINGS: The application materials do not respond to Criterion J, 10. The requested Standard STR is proposed in a detached single family dwelling in the Residential (R-1) District. There are no multifamily dwellings or accessory dwelling units (ADU) on the property. Criterion 17.203.240, J, 10, is met.

**11. For all Type II STRs, the property owner shall designate a local representative that is physically located within the Dundee urban growth boundary (UGB) or within 10 vehicular miles of the UGB. Said representative can be a property owner or a licensed property management company with a physically staffed office within 10 vehicular miles of the UGB. The owner may be the designated representative if the owner resides within these stated limits.**

**The local representative must be authorized by the owner of the dwelling to respond to the tenant and neighborhood questions or immediate concerns. The local representative shall serve as the initial contact person if there are questions or complaints regarding the operation of the STR, including immediate complaints. The local representative must respond to complaints in a timely manner to ensure the dwelling complies with the standards for STRs and other city ordinances pertaining to, but not limited to, noise, disturbances, nuisances, as well as state laws pertaining to the consumption of alcohol, or the use of illegal drugs, or other illegal activities.**

FINDINGS: As stated in the finding for Section 17.203.240, J, 7, a, the application form shows the Local Representative (LR) is Megan Carda, Lifestyle Homes, in Newberg and lists a phone number and email address.

The application form's instructions explain the LR is the "person responsible for maintenance and emergencies." The LR is the party who neighbors or other parties would contact to report problems with the short term rental, especially problems after normal working hours including, but not limited to, improper behavior by the renters. The LR is within 10 driving miles of the short term rental. Criterion 17.203.240, J, 11, is met.

**12. No person or principal shall possess more than one STR permit pursuant to this chapter.**

FINDINGS: The City's files do not show the applicant or principal, Jonathon Pohl and Ana Montalvan, will possess more than one STR permit in the City. Criterion 17.203.240, J, 12, is met.

**13. Smoke detectors are required in all sleeping areas, the hallway serving them, and every floor. Carbon monoxide detectors shall be located in each bedroom or within 15 feet of each bedroom door. Bedrooms on separate floor levels in a structure shall have separate carbon monoxide alarms serving each story. A fire extinguisher having a minimum rating of 2:A 10:BC must be mounted three to four feet above the floor in the kitchen area approximately five to 10 feet from the cooking stove.**

FINDINGS: The application materials include photos showing the fire extinguisher, smoke detectors and carbon monoxide detectors. The applicant's first-floor and second-floor floor plans show the location of

the fire extinguishers, smoke detectors and carbon monoxide detectors. Criterion 17.203.240, J, 13, is met.

## Comments From Owners and Occupants Within 200-Feet of the Subject Property

Philip Carey Comments.

FINDINGS: Mr. Carey's letter states, in part, "I am neither for nor against VR's." The comments ask questions and do not address the approval criteria.

Virginia Pedersen Comments.

FINDINGS: Ms. Pedersen is a Vacation Rental owner/operator in Dundee at 172 SW Hawthorne Court. The comments ask the Planning Commission "...to consider a policy that would allow for a certain number of licenses within a radius or city block." The Commission chose not to consider a policy limiting STR's within a radius or block because there is an existing STR limit of 5% of the total number of single family dwellings in the City Limits.

ATTACHMENT 2

CITY of DUNDEE Oregon

# Type III Review

Conditional Use

Fee: $480.00 + $1500.00 deposit | File No. CU/STR 22-10

**Applicability: A conditional use application is used when certain uses, which, due to the nature of their impacts on surrounding land uses and public facilities, require a case-by-case review and analysis.** Note: A variance application may be submitted concurrently with other applications for review on the same project (i.e. partition, site design review, etc.).

| | |
|---|---|
| **Applicant:** Jonathon Pohl, Ana Montalvan | |
| **Address:** 425 SW Dogwood Drive, Dundee Oregon 97115 | |
| **Email Address:** John@newberglaw.com | |
| **Phone(s):** (503) 583-3138 | |
| **Owner (if different from above):** | |
| **Owner Address:** | |
| **Email Address:** | |
| **Phone(s):** | |
| **Project Name:** Dogwood | |
| **Project Location:** 425 SW Dogwood Drive, Dundee Oregon 97115 | |
| **Map/Tax Lot No.:** R3326AD02300 | **Zone:** R1 |
| **Parcel Size:** 1986 acres | **Current Use:** |
| **Surrounding Uses:** Residential | |
| **Project Description:** STR | |

**Each application must include the following:**

- [x] Current Title Report (within 6 months)
- [x] Project Statement: Describe the reason for the conditional use application.
- [ ] Site Plan(s) showing the following items (may be shown on multiple sheets):
  - Existing features (buildings, parking, landscaping, etc.);
  - Proposed new site features (buildings, parking, landscaping, etc.);
  - Utilities;
  - Parking, access, and on-site circulation;
  - Site landscaping.
  - Signage.

☒ Architectural drawings as necessary to show compliance with Code criteria.

☐ Written response to the conditional use permit approval criteria (DMC 17.404.A)

1. The site size, dimensions, location, topography and access are adequate for the needs of the proposed use, considering the proposed building mass, parking, traffic, noise, vibration, exhaust/emissions, light, glare, erosion, odor, dust, visibility, safety, and aesthetic considerations;
2. The negative impacts of the proposed use, if any, on adjacent properties and on the public can be mitigated through application of other code standards, or other reasonable conditions of approval;
3. All required public facilities, including water, sanitary sewer, and streets, have adequate capacity or are to be improved to serve the proposal, consistent with city standards;
4. A conditional use permit shall not allow a use that is prohibited or not expressly allowed under DMC 17.200; nor shall a conditional use permit grant a variance without a variance application being reviewed with the conditional use application.

Note: In accordance with 17.404.B, the City may impose conditions that are found necessary to ensure that the use is compatible with other uses in the vicinity and that negative impact of the proposed use on the surrounding uses and public facilities is minimized.

**CONFORMANCE TO STANDARDS**

The undersigned understands that this application must be complete and accurate; that before the proposed conditional use will be accepted for consideration by the Dundee Planning Department all aspects of the project shall substantially conform to the standards, regulations, and procedures officially adopted by the City of Dundee, Oregon.

All owners must sign the application or submit letters of consent. Incomplete or missing information may delay the approval process. It is further understood that the applicants(s) having business with the City of Dundee hereby agree to reimburse the City for costs incurred on their behalf for planning, engineering, and legal services as they may relate to the request, application, or project.

| | | | |
|---|---|---|---|
| 3-23-2022 | | 3-23-2022 | |
| Applicant Signature | Date | Owner Signature | Date |
| Jonathan Pohl & Ana Montalvan | | Jonathan Pohl & Ana Montalvan | |
| Print Name | | Print Name | |

## Process

A variance is a Type III application, which involves a public hearing and provides an opportunity for those who appear to appeal the Planning Commission decision to the City Council. The process also requires public notice to all properties within 100 feet of the project site. This application will go through the following process:

1. Applicant submits application form and all required materials for review.
2. City staff will do a completeness check and let you know whether more information is needed (within 30 days of application).

3. City staff will prepare and mail notice to all property owners within 100 feet of the project site, and will send the application materials for review and comments to internal and external departments and agencies. This is a two-week long comment period.
4. Once all comments are received, city staff will prepare a staff report on the application.
5. Planning Commission will hold a hearing and make a decision on the application.

# BROWN, TARLOW, BRIDGES & PALMER, PC

Attorneys at Law

JOHN T. BRIDGES
STEPHEN C. PALMER
RICHARD P. BROWN
LOREN G. GAUKROGER

ALLYN E. BROWN
DONALD O. TARLOW
Retired

515 E. FIRST STREET
NEWBERG, OREGON 97132
TELEPHONE: (503) 538-3138
FACSIMILE: (503) 538-9812
www.newberglaw.com

March 28, 2022

RECEIVED
MAR 31 2022
CITY OF DUNDEE

City of Dundee
P.O. Box 220
Dundee, Oregon 97115

**Re:** *Request for Conditional Use Permit - Short-Term Rental*
*Applicants: Jonathon Pohl, Ana Montalvan*
*Tax Lot #: R3326AD02300*

Ladies and Gentleman:

I represent Mr. Jonathan Pohl and Ms. Ana Montalvan in their application for Conditional Use Permit (CUP) to allow a short-term rental at their residence located at 425 SW Dogwood Drive, Dundee, Oregon 97115. Mr. Pohl and Ms. Montalvan recently purchased this property in October 2021 with a plan to retire to the property from the Seattle area. A CUP is necessary because an adjacent property has already been established as a short-term rental.

A) Background Facts

| | | |
|---|---|---|
| 1. | Parcel size: | 8,651 sq ft. |
| 2. | Access: | Access to this Parcel is provided by SW Dogwood Drive |
| 3. | Onsite land use and zoning: | The property currently houses a large residential home. The property is entirely zoned R1. |
| 4. | Surrounding: | The surrounding area is zoned R1. |
| 5. | Water: | Water is supplied by the City of Dundee. |
| 6. | Sewage Disposal: | Waste water disposal is supplied by the City of Dundee. |
| 7. | Fire Protection: | This Parcel is within the City of Dundee Fire protection District. |
| 8. | Flood Hazard: | This Parcel is outside the flood way and new portions of property are within the 100 year flood plain or flood way. |

B) Ordinance, provisions, and analysis:

1. The Dundee municipal code Section 17.404.A requires considerations of the following factors in review of the Conditional Use Permit Application:

*A) The site size, dimensions, location, topography and access are adequate for the needs of the proposed use, considering the proposed building mass, parking, traffic, noise, vibration, exhaust/emissions, light, glare, erosion, odor, dust, viability, safety, and aesthetic considerations;*

*B) The negative impacts of the proposed use, if any, on adjacent properties and on the public can be mitigated through application of other code standards, or other reasonable conditions of approval;*

*C) All required public facilities, including water, sanitary sewer, and streets, have adequate capacity or are required to be improved to serve the proposal, consistent with the city standards;*

*D) A Conditional Use Permit shall not allow a use that is prohibited or not expressly allowed under DMC 17.200; nor shall a conditional use permit grant a variance without a variance application being reviewed with the conditional use application.*

The following is a list of responses to factors set forth above;

A) The site size, dimensions, location, topography and access are adequate for the needs of the proposed use, considering the proposed building mass, parking, traffic, noise, vibration, exhaust/emissions, light, glare, erosion, odor dust, visibility, safety, and aesthetic considerations;

The applicant's property consists of a 4,112 sq ft home that consists of five (5) bedrooms and three (3) bathrooms. This home sits on a 8,651 sq ft lot in the North part of the City of Dundee. The home was built in 1990 and all of the dimensional standards and setback requirements as established in 1990 per the Dundee Municipal Code have been satisfied. The property is surrounded by other single family homes of similar size and are all in the same zone of R1. The topography, soil, and location of this property make it suitable for its current use and the proposed use of its short-term rental property. The ingress and egress are provided via SW Dogwood Drive which is also suitable for the properties current use and proposed use. The property has room for six (6) off street parking spots.

B) The negative impacts of the proposed use, if any, on adjacent properties can be mitigated through application of other code standards, or other reasonable conditions of approval;

There are minimal, if any, negative impacts on Applicants proposed use to use the home as a short-term rental property. Any concerns related to a over density of short term rental property in one location has already been mitigated and addressed in the Dundee Municipal Code which as this applicants is doing necessitates a CUP so that the City of Dundee can analyze whether the density of multiple Short-term rentals

in one area is appropriate or not. If there is a concern about the two homes being rented together, the applicant would accept a condition preventing that.

C) All required public facilities, including water, sanitary sewer, and streets, have adequate capacity or are to be improved to serve the proposal, consistent with the city standards;

Portland General Electric currently provides electricity to the applicants property. Water and Sewer are currently provided by the City of Dundee. The Applicants proposed use will not over burden those systems considering that the Applicants do not reside in the property as their primary residential home instead using it occasionally as a vacation home. It's current and proposed use will have less impact on the system than a single family occupancy.

D) A Conditional Use Permit shall not allow a use that is prohibited or not expressly allowed under DMC 17.200; nor shall a conditional use permit grant a variance without a variance application being review with the Conditional Use Application.

Applicants acknowledge that the City of Dundee approval of a Conditional Use Permit in this instant will not grant a variance and that any need for a variance a on this subject property will require an application to be submitted.

The foregoing responses and the enclosed aerial map depicting the property have sufficiently responded to and should address all of the need of the City of Dundee in consideration for this Conditional Use Permit Application. In the events that there are any questions related to this application or other materials please do not hesitate to contact me.

Yours Truly,

BROWN, TARLOW, BRIDGES & PALMER, PC

John T. Bridges
JTB:ls
Enclosures
Title Policy;
Aerial;
Layout;
Parking Photos;
Application; and
Filing Fee.
cc: client

Off Street Driveway holds 3 cars

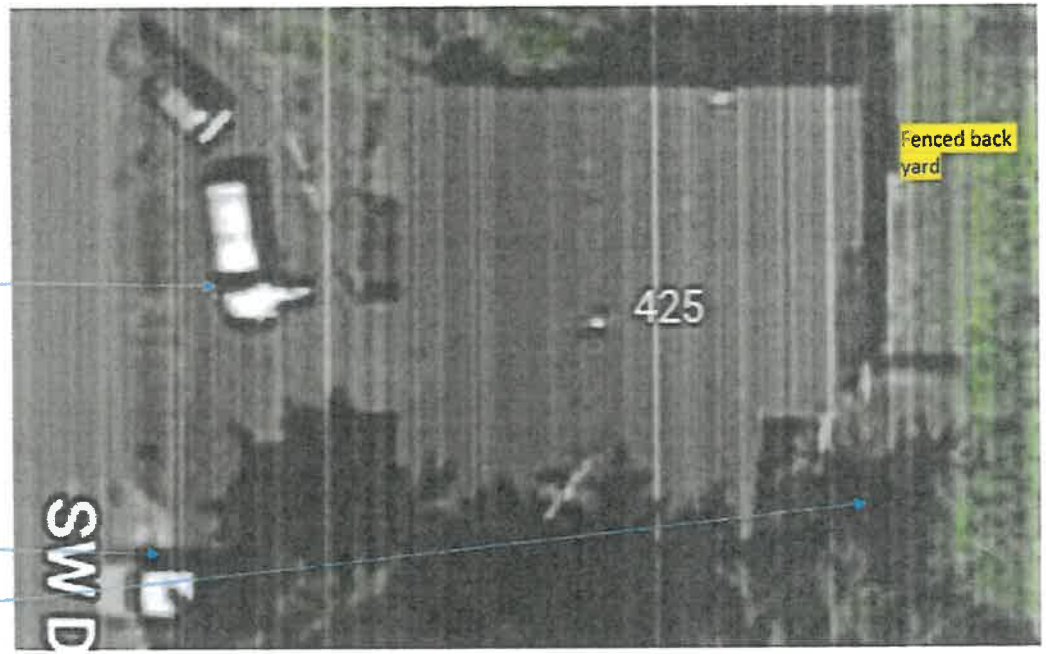


Drive way also goes down side of house to back yard area – 3 additional parking areas

## 425 SW Dogwood Dr, Dundee, OR 97115

Main 2,251 Sq ft

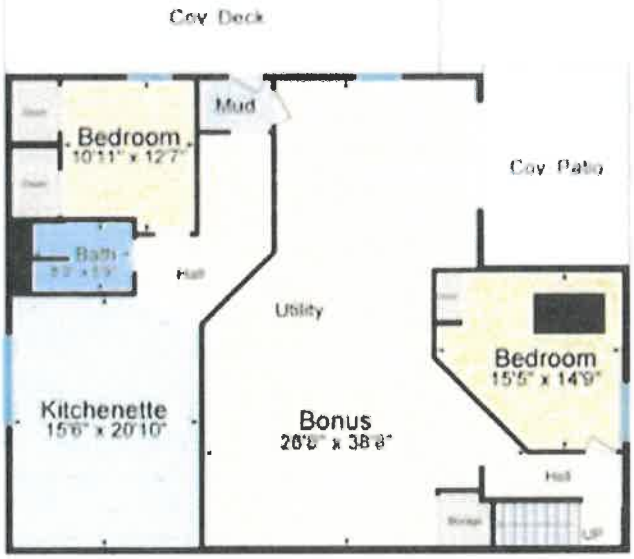


Lower 1,861 Sq ft

**Main + Lower = 4,112 Sq ft** (Measured from Exterior)
**Sketch Prepared for Lisa Munson**
**Property Measured on 07/29/2021**

AQualityMeasurement.com

CITY of DUNDEE Oregon

# Type II Review

Fee: $360.00 | File No. _____

## STANDARD SHORT TERM RENTAL APPLICATION

*Regulated by Dundee Municipal Code Chapter 17.203.240

**1) Property Description:**

Short Term Rental Address: 425 SW Dogwood Drive, Dundee, Oregon 97115

Tax Lot R3326AD02300 Zoning Designation R1

Number of Bedrooms: 5 Number of Bathrooms 3

Number of On-Site Parking Spaces Provided (A minimum of two off street spaces are required): 6

Garbage Service Collection Day (weekly garbage service is required) Tuesday

**2) Applicant Information:**

A) Owner's Name: Jonathan Pohl and Ana Montalvan C/O John T. Bridges

Mailing Address: 515 East 1st Street, Newberg, Oregon 97132

Phone: 503-538-3138 Email: john@newberglaw.com

B) Local Representative Information (Person Responsible for Maintenance and Emergencies):
*Must be located within 10 vehicular miles of the City of Dundee Urban Growth Boundary.

Contact Name: Megan Carda, Manager - Lifestyle Properties, LLC

Mailing Address: 100 North Springbrook Road, Newberg, Oregon 97132

Phone: 503-564-0015 Email: megan@lifestylepropertiesoregon.com

**3) The following items must be submitted with the application:**

☑ Business License Application ☑ Transient Tax Registration Form

☑ A Site Plan drawn to scale, which indicates the following:

- The actual shape and dimensions of the lot
- Sizes and locations of buildings
- Off-street parking spaces
- A floor plan, which clearly indicates the intended use of all interior areas (e.g., bedrooms, kitchen, living room, storage, etc.) by guests, as well as locations of smoke detectors, carbon monoxide detectors, and fire extinguishers.

☑ Images of the required safety features listed in DMC 17.203.240(J)(13)

☑ A list of the rules and requirements for renters. (If approved, these will be requirements of the permit.)

☑ A narrative explaining how the standards listed in DMC 17.203.240(J) and DMC 17.402.050 are met.

I (We) hereby declare under penalty of perjury under the laws of the State of Oregon that the foregoing information is true, complete, and correct. I (We) understand that providing false information in this application shall be a violation of Section 17.203.240 of the Dundee Municipal Code, and shall be grounds to deny the application, void the approval, enjoin the use, and revoke short-term rental dwelling license issued for the property.

| | |
|---|---|
| (Owner Signature) | May 31, 2022<br>(Date) |
| (Owner Signature) | May 31, 2022<br>(Date) |

# BROWN, TARLOW, BRIDGES & PALMER, PC

**Attorneys at Law**

**JOHN T. BRIDGES**
**STEPHEN C. PALMER**
**RICHARD P. BROWN**
**LOREN G. GAUKROGER**

**ALLYN E. BROWN**
**DONALD O. TARLOW**
**Retired**

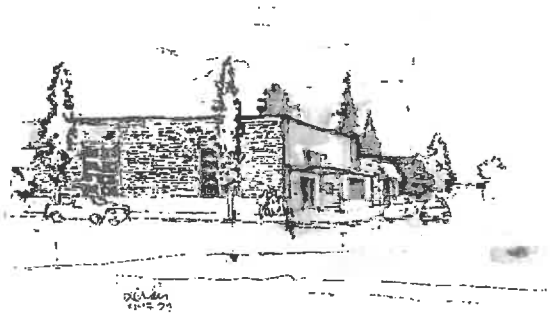

**515 E. FIRST STREET**
**NEWBERG, OREGON 97132**
**TELEPHONE: (503) 538-3138**
**FACSIMILE: (503) 538-9812**
**www.newberglaw.com**

May 31, 2022

City of Dundee
P.O. Box 220
Dundee, Oregon 97115

**Re:** *Short Term Rental Application for 425 SW Dogwood Street, Dundee, Oregon 97115*

To Whom it Concerns,

Please find enclosed a Standard Short Term Rental Application, City of Dundee Business License Application, and Transient Room Tax Registration Form. We are sending this letter, as a supplement to a previously submitted Conditional Use Permit application for a short term rental on the the same property. This supplement will respond to the applicable criteria in DMC 17.203.240(J) and DMC 17.402.050 for a short term rental. Notable additional enclosures include an aerial photo depicting the layout of the property and scaled drawing of the home. Applicants have already paid the filing fee for the Conditional Use Permit, as such no additional filing fee has been submitted with the Short Term Rental Application and Business License Application.

Mr. Jonathan Pohl and Anna Montalvan own the above-referenced property. The property is approximately 10,750 square feet. It is a square shaped property with its' east and west sides of property measuring approximately 125 feet and the north and south sides approximately86 feet. The home is in the center of the property.

DMC 17.402.050 provides general rules that require findings that the property and site comply with the code regarding developmental standards. The property does comply with all of these standards, or did comply with the code provisions, as they existed at the time the structures were built. DMC 17.203.240 and DMC 17.202.020 specifically allows for short term rentals in single-family residential zoned properties. This particular parcel is zoned R-1.

In this section we will address the applicable DMC 17.203.240(J) criteria. There are at least six parking spaces available for off street parking. Enclosed is a copy of the house rules. We will accept that a condition of approval will be that the house rules are posted inside the house. Additionally,

enclosed with this letter are photos within the house that correspond with the house layout. The photos demonstrate that smoke detectors, carbon monoxide detectors and the fire extinguisher are in the locations required under (J)(13). The application identifies that the local representative will be Lifestyle Properties, LLC.

If there are any questions about the completeness of the application or you wish to see other materials, please do not hesitate to contact me.

Yours Truly,

BROWN, TARLOW, BRIDGES & PALMER, PC

John T. Bridges

JTB/lgg
Enclosures

Standard Short Term Rental Application;
City of Dundee Business License Application;
Transient Room Tax Registration Form;
Aerial photo depicting layout of the Property;
Scaled drawing of home;
Photos of safety devices in home; and
House rules

cc: client

CITY of DUNDEE Oregon

*(For Office Use Only)*

*Permit No.*

*Expires*

# CITY OF DUNDEE BUSINESS LICENSE APPLICATION

*Regulated by DMC 5.04 – Business Licenses

Please Check One: ☐ General Business ($75.00)[1] ☐ General Business ($45.00)[1,3] ☐ Home Occupation ($75.00)[2] ☐ Bed and Breakfast ($75.00)[2]
☐ Small Short-Term Rental (up to 4 occupants - $100.00) ☐ Medium STR (5-8 occupants - $125.00) ☒ Large STR (more than 8 occupants - $150.00)

[1] Charges for Multiple Business and/or Partnerships may differ. [2]Requires Land Use approval prior to issuance of a license. [3]If after October 1st

*Late Fees will begin accumulating if annual business license is not renewed by January 31st of each year.

## Section 1. General Information

Name of Business: Anew Properties LLC

Business Location: 425 SW Dogwood Drive, Dundee, Oregon 97115

Mailing Address: 425 SW Dogwood Drive, Dundee, Oregon 97115

Business Telephone Number: 503-538-3138 Secondary Number:

Email Address: john@newberglaw.com Website:

Nature of Business: Short Term Rental Number of Employees 0

## Section 2. Land Use Approval

Some businesses must receive land use approval as well as business license approval. In these circumstances, a land use application and approval must be completed and received. Those businesses include, but are not limited to, Home Occupations, Short-Term Rentals, Bed and Breakfasts, and any business requiring Type 1 Checklist Approval.

Land Use Approval File No. _____ Date Approved _____

Land use approval will remain in effect so long as the business license is renewed each year. Failure to renew may necessitate a new land use approval.

## Section 3. Short-Term Rental Renewals

A number of items are required to be done prior to business license renewal for Short-Term Rentals.

Please provide the following:

- ☐ Evidence that the STR generated at least $500.00 in transient room taxes over the last 12-month period.
- ☐ Evidence that, at the time of renewal, all transient room taxes have been paid in full for the previous year.
- ☐ An affidavit stating that notice has been mailed to all neighbors within 200 feet of the STR property that includes emergency contact information for the representative of the Short-Term Rental.
- ☐ The log of complaints for the previous year. This shall include issues received/reported by the property owner or manager and all nuisance issues that were addressed by the police. The log must explain how each complaint was addressed.

**Section 4. Hazardous Materials**

Does your business involve the storage or use of any flammable materials or supplies? ☐ Yes ☒ No

If the answer is yes, provide the name(s) of each material and the quantity kept at the business site. Please put an asterisk (*) next to each of these products or materials (if any) that are classified as hazardous, toxic, or explosive by the US Department of Commerce or the Oregon State Fire Marshall's office.

| Material Name | Amount on Premise |
|---|---|
| | |
| | |
| | |
| | |

**Section 5. Owner Information**

_____ (Please Initial) **I am submitting the information below on the condition that the City of Dundee keep it confidential to the fullest extent of the law.**

Owner's Name: Anew Properties LLC Phone Number: _____

Owner's Address: 425 SW Dogwood Drive, Dundee, Oregon 97115

Driver's License Number: _____ State _____

Manager's Name: Megan Carda Phone Number: 503-564-0015

Driver's License Number: _____ State _____

Number of Employees: 0 Is business protected by Alarm System? ☐ Yes ☐ No Permit Number: _____

Emergency Contacts:

#1. Jonathan Pohl Phone Number: 281-650-3992

#2. Ana Montalvan Phone Number: 281-650-3992 / 415-515-3997

#3. _____ Phone Number: _____

I, _____ will conduct business as described in this application during the year, or partial year, for which the business license is hereby applied for in conformity with all laws of the State of Oregon and the Ordinances of the City of Dundee. I HEREBY CERTIFY THAT ALL INFORMATION IS TRUE, CORRECT AND COMPLETE TO THE BEST OF MY ABILITY.

Signed _____

Date May 31, 2022

Approved Yes ☐ No Initials Date _____ Comments _____

CITY of DUNDEE Oregon

# Transient Room Tax Registration Form

**Business Information:**

Anew, LLC, C/O John T. Bridges 503-538-3138

Business Name | Phone

515 East 1st Street | Newberg Oregon 97132

Street | City State Zip

Anew, LLC, C/O John T. Bridges 503-538-3138 john@newberglaw.com

Name of Operator / Manager | Phone | E-Mail

Jonathan Pohl and Ana Montalvan

Name and Phone of the Individual Responsible for the completion of the "Transient Room Tax Form" and payment of the taxes

**Type of Business:** (check one)

Bed & Breakfast____ Vacation Rental X Hotel/Motel ____ **Total Rooms** _____

**Owner Information:**

**Form of Ownership:** (check one) Individual X Partnership____ Corporation____

Corporation or Partnership Name if Different from Business Name Above

**Individual Owners, Partners, or Corporate Officers**

| Name | Titles | Address |
|---|---|---|
| Jonathan Pohl | N/A | C/O 515 East 1st Street, Newberg, Oregon 97132 |
| Ana Montalvan | N/A | C/O 515 East 1st Street, Newberg, Oregon 97132 |

**Dundee Municipal Code 3.04.030 Imposition of Fee**

For the privilege of occupancy in any hotel, on and after January 1, 2015, each transient shall pay a fee in the amount of 10% of the rent charged by the operator. The fee collected or accrued by the operator is to be held by the operator in trust for the City and shall be deemed to be a debt owed by the operator to the City.

**Certification:** I certify that 1) to the best of my knowledge and belief, the information provided herein is true and, 2) I have been given a Dundee Transient Room Tax Municipal Code section 3.04 and will comply as applicable.

Jonathan Pohl / [illegible] May 31, 2022

Signature Date

Phone 503.538.3922 * Fax 503.538.1958
620 SW Fifth Street * PO Box 220 * Dundee, Oregon 97115
E-mail: DundeeCity3@comcast.net

Rev 2016.11.21

425 SW Dogwood Drive
Parcel Size: 8,651 sq. ft.
Dimensions 125' x 86'
House Size: 4,112 sq. ft.
Offstreet Parking: 6
Legend
Parking Area
Property Line
SW Dogwood Dr
Google Earth
300 ft

**Top Floor**

3
bedrooms

2
bathrooms

Main 2,251 Sq ft

Driveway also goes down side of house

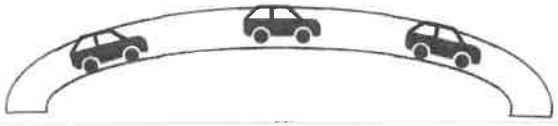

Half moon driveway in front of house can hold 3 cars for parking

Dogwood Drive

**Bottom Floor**
2 bedrooms / 1 bathroom

Garage

Unfinished Basement

.ower 1,861 Sq ft

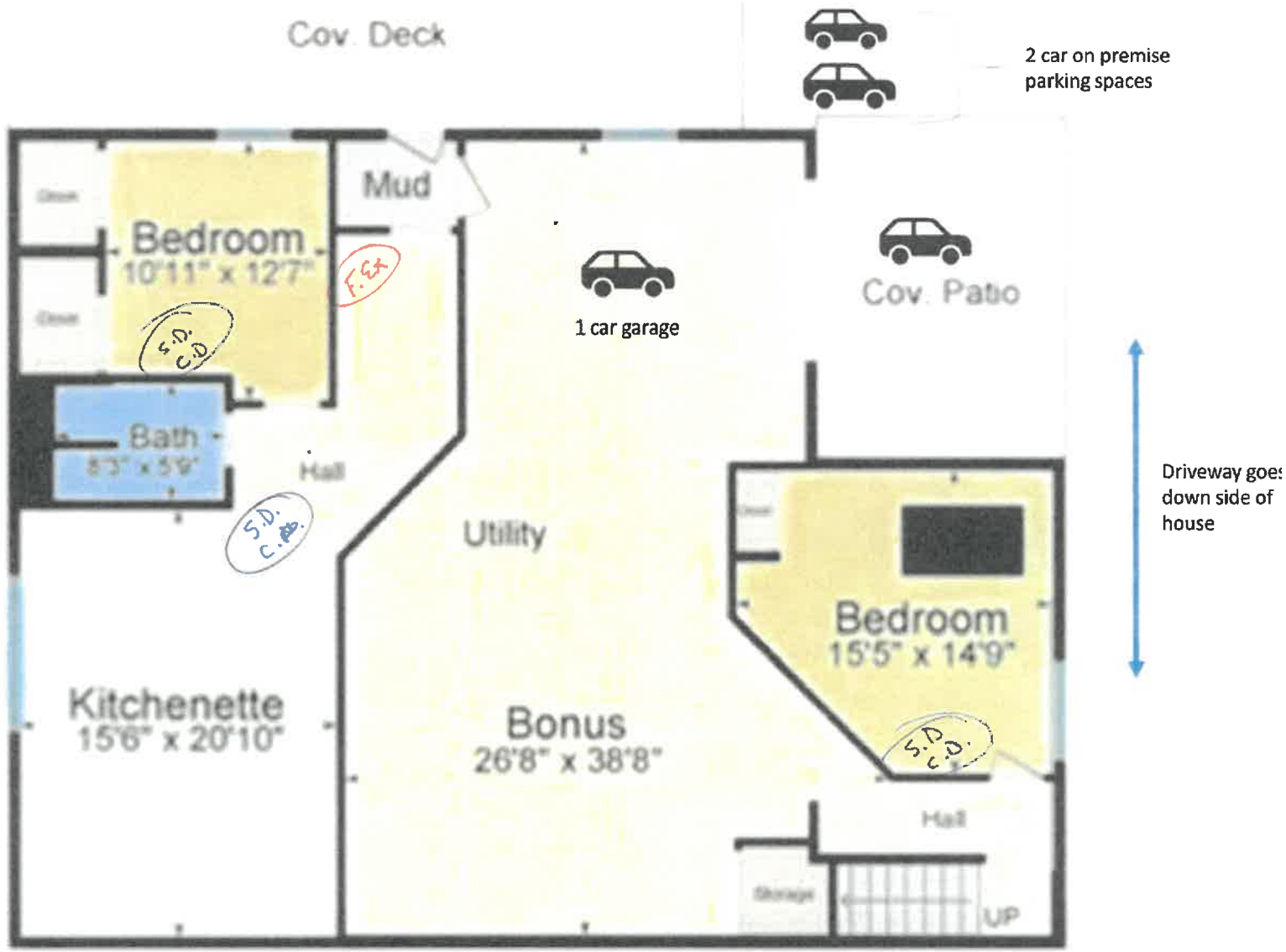

## Safety Devices

All current as of May 9, 2022

### Top Floor

Smoke/Carbon Monoxide Detector outside of Master Bedroom

Fire Extinguisher in kitchen pantry – 7 ft from stove

Smoke/Carbon Monoxide Detector outside of guest rooms

### Bottom Floor

Fire Extinguisher – entry of guest bedroom/bath kitchenette area

Smoke/Carbon Monoxide Detector inside guest room 1

Smoke/Carbon Monoxide Detector inside guest room 2

Smoke/Carbon Monoxide Detector outside bathroom and guest room 1

- **Safety Devices Continued**

- Installed 2 new Radon mitigation systems – North and South side of house. Installed 2021.

- Also have a Radon meter in lower floor living area.

## House Rules for 425 SW Dogwood Dr, Dundee, OR 97115

### *Welcome to Our Neighborhood!*

Dear Guests,

Hello and welcome! Thank you for choosing our property for your trip to the Willamette Valley.

You have arrived at the place we call home, the town we love, and have chosen to put roots down. We are glad you have selected this beautiful rental to call *home sweet home* while exploring our lovely area. It brings us much joy to see people enjoying their time here and as you do so, we simply request a few minor considerations:

If you have any questions during your stay, please contact Lifestyle Properties at (971)832-3399. Someone will be available 7 days a week from 9 AM to 5 PM. In case of an urgent matter outside of our operating hours, please call (503)476-9180. For emergencies, please call **911.** In the event you notice any maintenance issues that need to be addressed, please reach out and we will be happy to schedule a team member to help at the soonest availability. Please place trash in the appropriate bin outside, and our maintenance will remove between each guest stay or every Tuesday if you are staying for more nights.

**For non-emergency matters:**

Newberg/Dundee Police Department - (503) 538-8321
McMinnville Police Department - (503) 434-7307
Carlton Police Department - (503) 852-7575
Dayton Police Department - (937) 333-2677
Amity Police Department - (503) 835-8606

**Iouse Rules for 425 SW Dogwood Dr, Dundee, OR 97115**

Before you settle in and get comfortable, we would like to ensure everyone in your group is aware of the Vacation Rental Agreement in place for this home. Fully understanding and complying with the Vacation Rental Agreement will make for a comfortable and enjoyable stay for everyone! Please review your Vacation Rental Agreement carefully in order for the home will help to avoid damage and unwanted fees at the end of your visit. Some key House Rules are listed below:

- The maximum number of occupants permitted to stay in the home shall be no more than eight (8) people.
- Primary renter must be at least 25 years of age and is responsible for the actions of themselves and the other occupants or visitors of the property. A parent or legal guardian must accompany all guests under 21 years of age for the entire duration of the rental.
- It is requested for all guests to treat the property with the same care as you would your own residence and leave the home in the same condition as it was when you arrived.
- The primary renter, other occupants, and visitors of the property must conduct themselves in a respectful manner that is not disruptive to neighbors, traffic flow, or the community and will not prompt complaints from police, neighbors, or neighborhood associations. Noise outside the home is strictly prohibited between 10 PM and 7 AM.
- Smoking is strictly prohibited at this property including the exterior of the home.
- Events and event related items (bounce houses, tents, etc.) are not permitted at this property.
- Any criminal activity is prohibited and we will fully cooperate with any investigations of alleged unlawful activity, including sharing your information with the authorities.
- No unauthorized parking is allowed. Per city regulations, no street parking is permitted.

ATTACHMENT 3

July 10, 2022

City of Dundee
Written Comments: CU/STR 22-10
Attn: Planner
P O Box 220
Dundee, OR 97115

I live on the corner of Hawthorne and 3rd (117). On the map you sent, I have highlighted in yellow the Vacation Rentals (VR's) that I know exist in my neighborhood.

These are my questions, comments and concerns.

How many VR's are you going to allow in Dundee? How many is too many within Dundee or in one neighborhood?

Are you regulating VR's for Short Term Rental Tax? If that is a true statement, then why are you not trying to get boutique hotels to locate in Dundee. Hotels would concentrate the traffic out of the neighborhoods.

Should the tax charged be higher because in most cases, more than one couple occupies the property? Maybe based on # of Bedrooms.

How is the tax collected spent? General Fund, Special Projects?

You have a list of rules that the VR's must follow. Who is responsible to inspect/monitor the properties for compliance during application and ongoing?

Water/Sewer rates are based on water consumption in the winter. VR's are generally NOT occupied during those times. Are those fees adjusted?

I am neither for nor against VR's. I just want a strong community with neighbors and tourist to that pay for use of our resources.

Phillip Carey
175 SW Hawthorne Ct.
Dundee, OR 07115

The Planning Commission will pass an oral motion at the end of the public hearing process directing staff to prepare a Planning Commission Order for the Commission Chair to sign (1) approving the application, or (2) approving the application with conditions, or (3) denying the application. If you participate in the public hearing process, either by testifying at the public hearing, or by submitting written comments, the City will send you a notice of the decision including your appeal rights.

The subject property is shown in red on the following map.

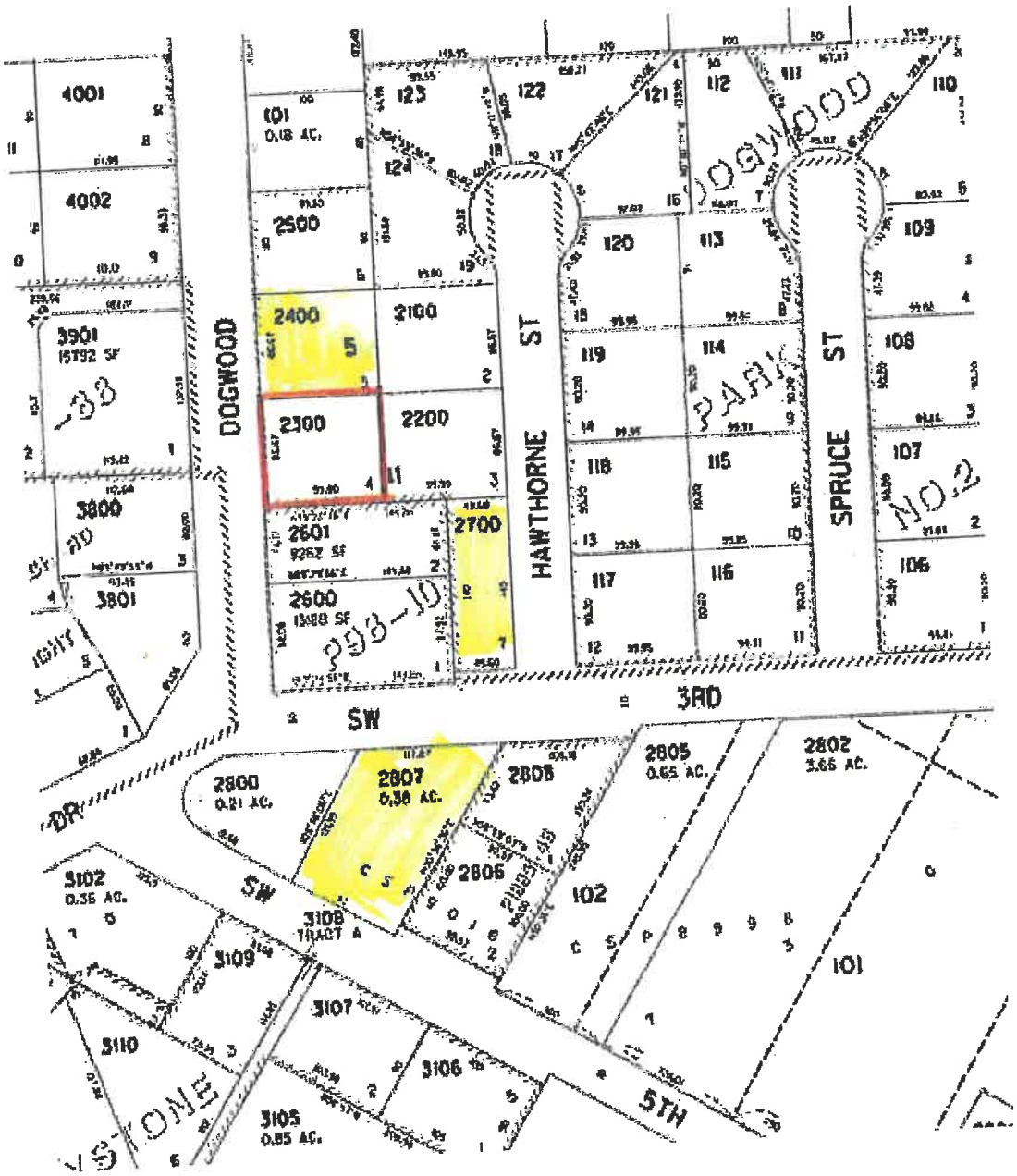


Date Mailed: June 29, 2022

July 11th, 2022
To: Dundee Planning Commission
Re: Conditional Use Application (CU/STR 22-10)

Dear Dundee Planning Commission,
I am the current owner of a short term rental within 200 feet of this application. I would be a hypocrite if I were to say I was against this application. There clearly is still a need for more short term housing in this area. I have been lucky enough to not see a drop off in income since 2015 despite an incredible increase in short term rentals on the market in Dundee over the last 7 years.

My concern is not this application, rather the livability for permanent residents of Dundee when their "neighbors" are all nightly visitors. I would love for the planning commission to consider a policy that would allow for a certain number of licenses within a radius or city block.
I have been very lucky so far to have great support and communication from my current neighbors, but I fear that if the block gets crowded with short term rentals, that support will fade.

I communicated this same feedback to the questionnaire a few years ago and would be happy to discuss this matter further if requested.

Thank you for your consideration,
Virginia Pedersen

Virginia Pedersen

Owner - 172 SW Hawthorne Ct, Dundee, OR 97115
608.469.6123

ATTACHMENT 4

# BROWN, TARLOW, BRIDGES & PALMER, PC

**Attorneys at Law**

**JOHN T. BRIDGES**
**STEPHEN C. PALMER**
**RICHARD P. BROWN**

**ALLYN E. BROWN**
**DONALD O. TARLOW**
**Retired**

**515 E. FIRST STREET**
**NEWBERG, OREGON 97132**
**TELEPHONE: (503) 538-3138**
**FACSIMILE: (503) 538-9812**
**www.newberglaw.com**

August 9, 2022

City of Dundee
P.O. Box 220
Dundee, Oregon 97115

*Sent via First Class Mail*

RECEIVED
AUG 11 2022
CITY OF DUNDEE

**Re:** *Appeal Application:* *Type II Decision*
*File Number:* *CU/STR 2022-10*
*Date of Decision:* *7/20/2022*

To Whom it May Concern,

Please find enclosed the Appeal Application, Exhibit A, and Check (Check No. 3785) in the sum of $320.00.

If there are any questions please do not hesitate to contact me.

Yours Truly,

BROWN, TARLOW, BRIDGES & PALMER, PC

John T. Bridges

JTB
Enclosure:
Appeal Application
Exhibit A
Check- $320
cc: client

CITY of DUNDEE Oregon

(For Office Use Only)

Land Use File No.

AP 22-22
(CU/STR 22-10)

# TYPE II DECISION – APPEAL APPLICATION (To City Council)

FEE: $320.00

*Regulated by Section 17.401.030(D) of the Dundee Municipal Code

1) Applicant Information:

Name of Applicant: Jonathon Pohl, Ana Montalvan Phone Number: (503) 538-3138

Mailing Address: C/O John T. Bridges 515 East First Street, Newberg Oregon 97132

Email Address: John@newberglaw.com

Co-Applicant: Phone Number:

Identify Decision Being Appealed: Planning Commission

File Number: CU/STR 2022-10 Date of Decision 7/20/2022

2) Description:

Please state the specific issues being raised on appeal:

See attached EXHIBIT A.

I hereby certify that all information, justification, and supplemental information submitted are in all respects true and correct to the best of my knowledge.

Applicant: Date: Aug 9, 2022

Co-Applicant / Owner: Date Aug 9, 2022

## EXHIBIT A

The applicant is filing the appeal therefore they have standing. The applicant demonstrated substantial evidence supporting all of the criteria. The Planning Commission inappropriately assigned a heighten burden for the application. In addition to applying the Short-Term Rental Criteria they also required the application of the Conditional use criteria. The Planning Commission also assumed facts that were not in evidence while engaged in deliberation. Those included speculating on the total number of grandfathered Short-Term Rentals, grouping of Short-Term Rentals, and oversized impacts of Short-Term Rentals.

The applicant looks forward to the City Council's consideration of applicant's substantial evidence supporting the criteria for a Short-Term Rental at this location.

ATTACHMENT 5

# BROWN, TARLOW, BRIDGES & PALMER, PC

**Attorneys at Law**

**JOHN T. BRIDGES**
**STEPHEN C. PALMER**
**RICHARD P. BROWN**

**ALLYN E. BROWN**
**DONALD O. TARLOW**
**Retired**

**515 E. FIRST STREET**
**NEWBERG, OREGON 97132**
**TELEPHONE: (503) 538-3138**
**FACSIMILE: (503) 538-9812**
**www.newberglaw.com**

October 27, 2022

City of Dundee
Attn: Jim Jacks
P.O. Box 220
Dundee, Oregon 97115

*Sent via first class mail and e-mail* to
*jjacks@mwvcog.org*

***Re:*** *File Number:* *CU/STR 2022-10*

Dear Mr. Jack,

Please consider this letter and the enclosures additional evidence in the above referenced application. The following items are enclosed:

1. Airbnb guest rating materials;
2. Data showing the total number of lots in the City of Dundee capable of being approved for STR;
3. Data showing the total number of STR's (9) and Vacation Rentals (15) approved by the City (24 total);
4. The mapping of permitted STR's and Grand fathered Vacation Rentals; and
5. Noise Complaints November 2020 to present for STR and VR.

Under Dundee's Ordinance the City could Approve 53 STR's. They are currently only at 17% of that limit. Obviously, as property is subdivided the number of permitted STR's goes up.

Please enter all this data into the record.

Yours Truly,

BROWN, TARLOW, BRIDGES & PALMER, PC

John T. Bridges

JTB
Enclosure
cc: client

## John Bridges

**From:** Steve Dahl <Steve.Dahl@dundeecity.org>
**Sent:** Wednesday, October 26, 2022 5:45 PM
**To:** John Bridges
**Subject:** RE: CU-STR 22-10

Below is what GIS came up with.
Agriculture: 14
R-1: 643
R-2: 239
R-3: 177
Total: 1,073

Steve

Sent from Mail for Windows

**From:** John Bridges
**Sent:** Tuesday, October 25, 2022 2:43 PM
**To:** Melody Osborne; 'Megan Carda'
**Cc:** 'Jonathan Pohl'; Steve Dahl; Chuck Simpson
**Subject:** RE: CU-STR 22-10

Melody,

Hopefully someone will have the number. Part of what I am after is having the City as a source, so I can submit it as evidence. We believe the number is a little over 1,100 developed and undeveloped(which probably would be subdivided) lots in those zones.

John T. Bridges
Brown Tarlow Bridges & Palmer, PC
515 East First Street
Newberg, Oregon 97132
(503) 538-3138
(503) 538-9812 Fax
www.newberglaw.com

Privacy Notice: The information contained in this email message is intended only for the personal and confidential use of the recipient(s) named above. This message may be an attorney-client communication and/or work product and as such may be privileged, confidential and protected from disclosure. If you are not the intended recipient or an agent responsible for delivering it to the intended recipient, you are hereby notified that you have received this document in error and that any review, dissemination, distribution, or copying of this message is strictly prohibited. If you have received this communication in error, please notify the sender by reply email at John@NewbergLaw.com or by telephone at (503)538-3138, and delete the original message and any attachments. Thank you.

**From:** Melody Osborne [mailto:Melody.Osborne@dundeecity.org]
**Sent:** Tuesday, October 25, 2022 12:37 PM
**To:** John Bridges <John@NewbergLaw.com>; 'Megan Carda' <megan@lifestylepropertiesoregon.com>

**Cc:** Jonathan Pohl <pohl160@gmail.com>; Steve Dahl <Steve.Dahl@dundeecity.org>; Chuck Simpson <Chuck.Simpson@dundeecity.org>
**Subject:** RE: CU-STR 22-10

John,

I have no easy way of obtaining that information. I've cc'd the City Administrator and Public Works Superintendent to see if they have those counts from any recent project work. But, if it comes down to me having to hand-count them it's going to take several weeks for me to get you that information. I'm trying to catch up from being out of the office for most of the last month.

If neither Steve or Chuck have the information readily available, you can also use the map on the city website to have someone in your office gather the information. https://mwvcog.maps.arcgis.com/apps/View/index.html?appid=123080f27b0d439da6b040b2e5754959

Melody Osborne
Administrative Assistant
503-538-3922 ext. 0

CITY of DUNDEE Oregon

**From:** John Bridges <John@NewbergLaw.com>
**Sent:** Tuesday, October 25, 2022 12:21 PM
**To:** Melody Osborne <Melody.Osborne@dundeecity.org>; 'Megan Carda' <megan@lifestylepropertiesoregon.com>
**Cc:** Jonathan Pohl <pohl160@gmail.com>
**Subject:** RE: CU-STR 22-10

Melody,

Thank you for providing the information to the Pohls.

Can you also provide me the total number of lots in the R-1, R-2, R-3, and Agriculture zones, combined.

Thanks in advance.

John T. Bridges
Brown Tarlow Bridges & Palmer, PC
515 East First Street
Newberg, Oregon 97132
(503) 538-3138
(503) 538-9812 Fax
www.newberglaw.com

Privacy Notice: The information contained in this email message is intended only for the personal and confidential use of the recipient(s) named above. This message may be an attorney-client communication and/or work product and as such may be privileged, confidential and protected from disclosure. If you are not the intended recipient or an agent responsible for delivering it to the intended recipient, you are hereby notified that you have received this document in

**How many applications/STR (Short-Term Rental) permits have been*approved* by the City of Dunde since August 1, 2021? Please provide the current number and exact address locations.**

STR 21-14, Tebb (1700 Dundee Landing Road)
STR 21-17, Kaspar (395 SW Dogwood Drive)
STR 21-21, Jernigan (727 SE Locust Street)
STR 21-24, Searson (763 SE Boysen Lane)
STR 22-01, Svicarovich (591 SW Alder Street)
STR 22-02, Heesacker (619 SE 8th Street)
STR 22-04, Langeliers (580 SW 9th Street)
STR 22-08, Elstrom (489 SE 8th Street)
STR 22-11, Kef House (709 SW Scotsman Court)
**Total** = 9

**What records does the City have of STR (grandfathered in) PRIOR to August 1, 2021 - what records do you have? Please include the number of permits the City has issued, Name and address locations.**
These are "Vacation Rentals", which continue to operate under the regulations for "Vacation Rentals" until discontinued.
They would be considered a Pre-Existing/Non-Conforming Use, but are not referred to as STRs.
As clarified in emails, the following list is of the remaining active "Vacation Rentals" only.

VR 16-02, Opitz (120 SW Cherry Street)
VR 17-17, Methven (130 SW 7th Street, Ste 200)
VR 18-06, Turk (141 SW Brier Place)
VR 19-10, Tuemmler (1460 SW Myrtle Street)
VR 16-15, Pedersen (172 SW Hawthorne Court)
VR 18-31, Larsen (200 SW 7th Street)
VR 17-05, Hauser (202 NW Namitz Court)
VR 15-25, Fitzpatrick (220 SW 11th Street)
VR 20-15, Fowler (241 NW Dogwood Drive)
VR 18-20, Sparks (309 SW Red Hills Drive)
VR 21-06, Larson (380 SW 9th Street)
VR 18-07, Hanna (742 SW Red Hills Drive)
VR 21-13, Poggi (753 SE Boysen Lane)
VR 16-03, Tina's (760-A N. Highway 99W)

Exhibit 3

VR 16-18, Eckerd (767 SW 5th Street)
**Total = 15**

**What are the zones within Dundee that allow for STRs?**
**Please advise what are the number of STRs within these.**

| | |
|---|---|
| R-1 (Residential) | 4 |
| R-2 (Residential) | 4 |
| R-3 (Residential) | 0 |
| Agricultural | 1 |

**Has the City received any complaints for rental misues in the past year?**

Not that I have been able to discover. Please note that the "City" is different from the Police Department. For police complaints you will need to contact them directly at 503-538-8321.

## John Bridges

**From:** Melissa Ferguson <melissa.ferguson@newbergoregon.gov>
**Sent:** Tuesday, October 25, 2022 3:23 PM
**To:** 'John Bridges'
**Subject:** Dundee rentals
**Attachments:** Dundee rentals CFS.pdf

Here you go, I did just put everything going back to Nov 2020 to present.
Thanks!

| Event Date | Call Number | Case Number | Situation Reported | Location |
|---|---|---|---|---|
| 2021-12-20T15:07:07 | 2021-026928 | No Case Assigned | FIELD INTERVIEW | 1700 Se Dundee Landing Rd |
| 2021-10-16T10:56:25 | 2021-021992 | No Case Assigned | ALARM | 1700 Se Dundee Landing Rd |
| 2021-08-21T10:30:22 | 2021-017653 | No Case Assigned | INFORMATION COMPLAINT | 1700 Se Dundee Landing Rd |
| 2021-05-31T23:26:00 | 2021-010735 | No Case Assigned | AREA CHECK | 1700 Se Dundee Landing Rd |
| 2021-05-04T04:13:38 | 2021-008574 | No Case Assigned | AREA CHECK | 1700 Se Dundee Landing Rd |
| 2021-02-27T15:47:44 | 2021-003651 | No Case Assigned | INFORMATION COMPLAINT | 1700 Se Dundee Landing Rd |
| 2021-02-24T00:22:33 | 2021-003391 | No Case Assigned | INFORMATION COMPLAINT | 1700 Se Dundee Landing Rd |
| 2020-12-01T06:01:24 | 2020-000719 | No Case Assigned | ALARM | 1700 SE DUNDEE LANDING RD |
| 2022-04-02T23:03:57 | 2022-007567 | No Case Assigned | NOISE COMPLAINT | 727 Se Locust St |
| 2020-12-25T20:47:19 | 2020-001910 | No Case Assigned | AREA CHECK | 130 Sw 7th St |
| 2021-06-26T11:34:04 | 2021-012851 | No Case Assigned | ALARM | 130 Sw 7th St |
| 2020-12-06T09:49:31 | 2020-000985 | No Case Assigned | ALARM | 130 Sw 7th St |
| 2021-01-06T16:27:25 | 2021-000293 | No Case Assigned | SUSPICIOUS | 130 Sw 7th St |
| 2022-10-21T14:35:54 | 2022-023638 | No Case Assigned | OTHER/ MISC | 130 Sw 7th St |
| 2021-09-05T11:28:35 | 2021-018797 | No Case Assigned | ALARM | 130 Sw 7th St |
| 2021-08-23T11:19:47 | 2021-017791 | No Case Assigned | ALARM | 130 Sw 7th St |
| 2022-01-06T14:55:08 | 2022-000411 | 22-0000031 | THEFT | 130 Sw 7th St |
| 2022-04-27T10:07:12 | 2022-009443 | No Case Assigned | ALARM | 130 Sw 7th St |
| 2021-04-19T04:29:26 | 2021-007479 | No Case Assigned | UNSECURE PREMISE | 130 Sw 7th St |
| 2020-12-08T12:47:30 | 2020-001102 | No Case Assigned | ALARM | 130 Sw 7th St |
| 2022-03-21T17:08:32 | 2022-006479 | No Case Assigned | PHONE CONTACT | 241 Nw Dogwood Dr |
| 2022-03-09T19:01:51 | 2022-005495 | No Case Assigned | PUBLIC WORKS CALLOUT | 309 Sw Red Hills Dr |
| 2022-04-06T19:29:45 | 2022-007855 | No Case Assigned | TRESPASS | 380 Sw 9th St |
| 2021-03-20T02:07:08 | 2021-005223 | No Case Assigned | NOISE COMPLAINT | 742 Sw Red Hills Dr |

ATTACHMENT 6

RECEIVED
SEP - 6 2022
CITY OF DUNDEE

September 10, 2022

City of Dundee
Written Comments: CU/STR 22-10
Attn: Planner / City Council
P O Box 220
Dundee, OR 97115

I live on the corner of Hawthorne and 3rd (117). On the map you sent, I have highlighted in yellow the Vacation Rentals (VR's) that I know exist in my neighborhood.

How many VR's are you going to allow in Dundee? How many is too many in the city of Dundee or in one neighborhood? Please get an approved / detailed plan for the city for VR's. You have a list of rules that the VR's must follow. Who is responsible to inspect/monitor the properties for compliance during application and ongoing?

Are you regulating VR's for Short Term Rental Tax? If that is a true statement, then why are you not trying to get boutique hotels to locate in Dundee. Hotels would concentrate the traffic out of the neighborhoods.

How is the tax collected spent? General Fund, Special Projects?

I want a strong community with neighbors. The Planning Commission denied the application and I am asking that the City Council affirm their decision.

Phillip Carey
175 SW Hawthorne Ct.
Dundee, OR 07115

Failure of an issue to be raised in the hearing, in person or by letter, or failure to provide statements or evidence sufficient to afford the decision maker an opportunity to respond to the issue precludes appeal to the Oregon Land Use Board of Appeals based on that issue.

The City Council will pass an oral motion at the end of the public hearing process directing staff to prepare a City Council Order for the Mayor to sign (1) affirming the Planning Commission denial, or (2) approving the application, or (3) approving the application with conditions. If you participate in the public hearing process, either by testifying at the public hearing, or by submitting written comments, the City will send you a notice of the decision including your appeal rights.

The subject property (Tax Lot 2300) is shown in red on the following map.

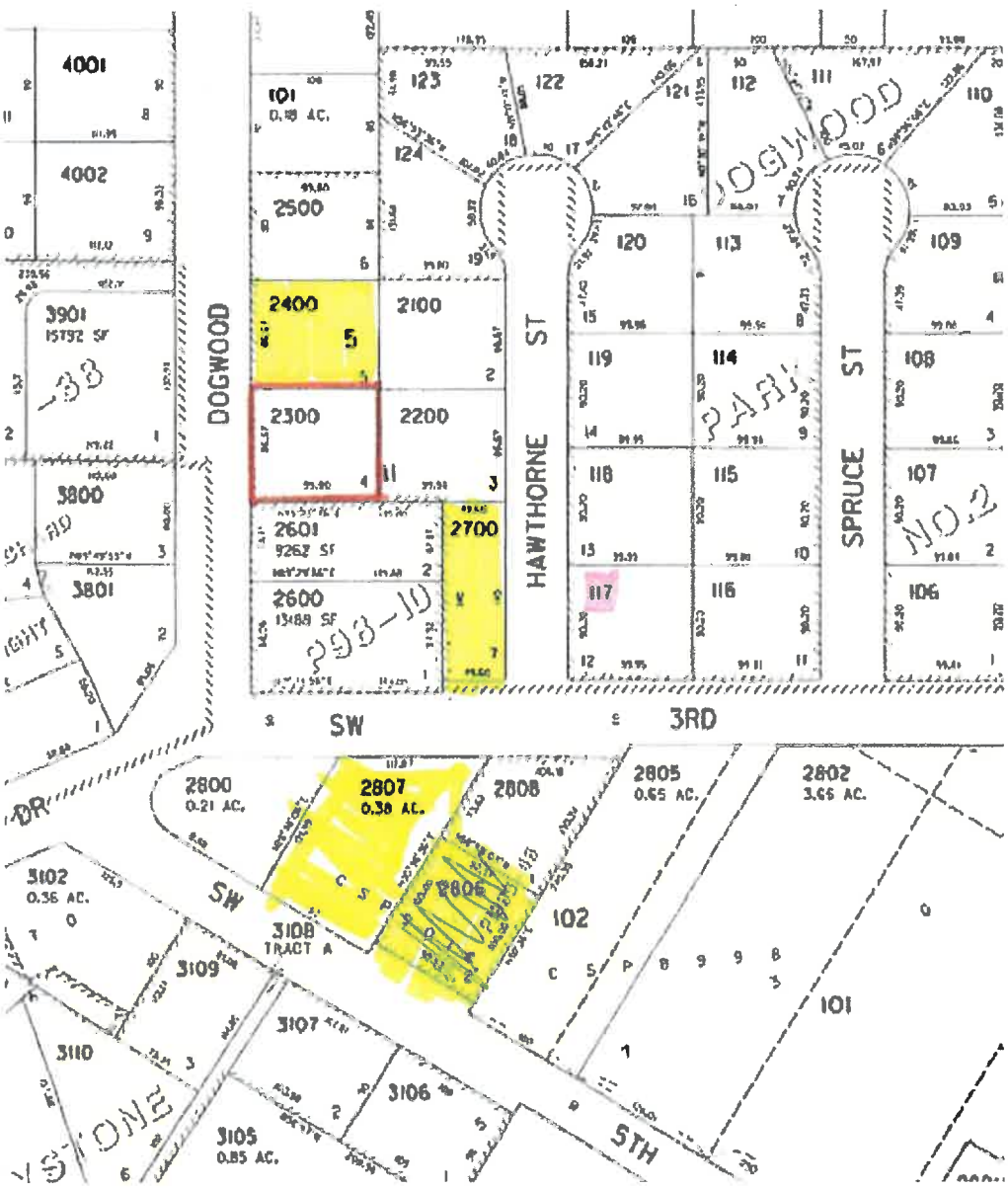


Date Mailed: August 29, 2022

City of Dundee

Short Term Rental and Conditional Use Permit STR/CU 22-10

20 September 2022 City Council Hearing

Mayor and City Council

I am asking you to uphold the decision of the Planning Commission by denying this appeal for the same reasons I opposed a conditional use approval at the Planning Commission hearing. I am providing you with the material submitted to the Planning Commission as I am allowed to use all of this as a basis for appeals regarding this CU application.

Regarding Dundee Development Code 17.203.040 E (1), 17.404.030 A (1) and 17.404.030 A (2), I have demonstrated that the density of STRs in this area creates a safety hazard that cannot be mitigated. I will emphasize that the Planning Commission packet did not show the location of the six (at least) existing STRs in the immediate vicinity of this conditional use application. Neighbors knowing each other and also knowing the normal patterns of life in the neighborhood, in cooperation with our approachable and responsive NDPD, is essential for safety. I have also become aware of issues with vacant houses. Please read below for all the reasons I consider this to be a safety issue that cannot be mitigated.

I am particularly concerned about densities of STRs after seeing the small, closely spaced, housing developments in Newberg. With high density residential zoning in place in the Riverside portion of the city, in the future we will have a much higher number of STRs within the 5% limit. Concentrating this number in part of the city will increase the safety issues. Your decision will set a precedent for the future. Because of this, I would appreciate you, as a council, initiating a code revision process to consider the future density issues. The only restriction prohibiting adjacent, side by side, STRs is not adequate protection for neighborhoods.

I would also appreciate you, as a council, initiating a code revision process to correct the confusion regarding 17.203.240 H. and J. that occurred at the Planning Commission hearing.

Thank you very much for considering my comments.

Elizabeth Sundeen

392 SW Dogwood Drive, Dundee, Oregon

City of Dundee

Type III Short Term Rental / Conditional Use Process

File Number: STR/CU 2022-10

20 July 2022 Public Hearing

City of Dundee Planning Commission

Melody Osborne

I am asking the Planning Commission to deny this Conditional Use on the basis of the Oregon Statewide Planning Goal 10, Housing; the Dundee Comprehensive Plan; the Dundee Development Code. There are also relevant errors and omissions in the materials presented to you.

Oregon Statewide Planning Goal #10:

Goal #10 requires all comprehensive plans to conform to the requirements of the Goal. Goal 10 also requires a 20 year projection of Housing Needs Assessment for the purpose of guaranteeing an adequate supply of housing to serve people at a variety of income levels, a range of places to live, and different community densities. The Housing Needs Assessment is based on a 20 year population projection.

The City of Dundee Comprehensive Plan: Land Use and Urbanization requires a 20 year population projection to identify land needs to support that population.

The City of Dundee Comprehensive Plan: Housing requires provision for a variety of housing types to meet the needs of different family sizes and incomes.

The Dundee Comprehensive Plan appearing on the City of Dundee website as official does not include a population projection beyond the year 2020. The applicant has not provided a 20 year population projection and has not provided a housing needs assessment. This is significant, as Dundee has a large acreage available for development. A portion of this acreage has been rezoned high density residential. The Dundee Development Code limits the total number of standard STR, to 5% of existing housing units. Currently, that allows approximately 50 standard STRs in the city. It is reasonable to expect that, within the next 20 years, significant Riverside housing development will happen, thus increasing the total number of standard STRs allowed in the city. It is reasonable to estimate the number of standard STRs allowed to increase to 100 – 150. If

all standard STRs continue to be clustered in the area where they are now clustered, a significant, required, segment of housing in Dundee will become unavailable. Burden of proof is on the applicant to prove that this will not happen. The applicant has not done so.

The Dundee Comprehensive Plan requires that the Vision of the city be considered in all land use actions. The Vision references "the city's pleasant, natural environment". The Conclusion states "Dundee is a model for citizen engagement, working together with community members, businesses, and developers, and government entities to provide effective government and public/private partnerships in the creation of a pleasant, livable small town. There is not another place in the country like Dundee that has succeeded in creating such an attractive and harmonious atmosphere." An area of the city dominated by STRs does not match this Vision.

Dundee Development Code 17.203.040 E. (1) states "The proposed standard STR will not present any burden on neighbors to the property."

Dundee Development Code 17.404.030 A. (1) states that negative impacts include but are not limited to noise, odor, safety and esthetic considerations

Dundee Development Code 17.404.030 A. (2) states "The negative impacts of the proposed use on adjacent properties and on the public must be mitigated."

Dundee Development Code 17.404.030 B. gives the Planning Commission essentially unlimited power to condition a Conditional Use approval. Unfortunately, conditioning sufficient to meet the above three code requirements and enforcing the conditions are two entirely different matters.

Dundee Development Code 203.242. K. requires immediate complaints to be directed to the police or to the property management. Property management is required to keep a log of complaints to be presented to the city at the time of renewal of the business license. As a practical matter, this doesn't work. Most immediate complaints, if not all, are now and probably will continue to be made to the police. These complaints are never forwarded to either property management or to the city and therefore will never be recorded as complaints. The police are able to handle a complaint at a moment in time, but cannot prevent recurrences either same day (usually night/very early morning in our neighborhood) or recurring over longer periods of time. Safety is a significant factor in considering this Conditional Use request. Illegal activities at STRs can easily be arranged to be unnoticeable to the surrounding properties. This may be why airb&b at one time required background checks for renters. There are, between 1st and 5th , including a corner house on 5th, eleven young children. There are at least two more immediately above this area on Brier. There are also visiting grandchildren at several houses within

this area. The proposed STR is within a very short distance of Billick Park. It is within a short distance of the Dundee Elementary School. The applicant did not address the unlimited number of Type 1 STRs and the impact adding these will have on safety in this immediate area. Having a neighborhood community of people who know and watch out for each other is very important to stopping criminal activities. Concentrating too many STRs of all types in one part of the city eliminates this caring, knowledgeable community. We are fortunate to have a responsive and effective police department which the community can contact, if such a community actually exists. This is an important point when I discuss the errors and omissions. Burden of proof is on the applicant to prove that all necessary mitigation requirements, particularly that for safety, can be met. Especially considering the applicant's omission of Type 1 STRs, errors and other omissions, the applicant has not proved this.

Errors and Omissions:

The applicant did not address the impacts of Type 1 STRs at all and did not provide the locations of existing standard STRs in the immediate area. Page 47 of your packet states that "The subject property is shown in red on the following map". Other unlabeled properties on this map appear in another color. These properties are existing standard STRs. The map omits two additional existing standard STRs, one on lot 3109 and one above and adjacent to lot 4002. Omitting two standard STRs – and not mentioning the at least four others in the immediate area of houses, the park, and the school– gives a significantly distorted view of the existing concentration of the STRs.

Page 8 of your packet notes that the lot to the south is vacant and that the owners have contacted the city regarding licensing an STR on a future house there. A two and a half story house exists on this property. I'm remembering that construction began in late November 2021 – December 2021. The For Sale/Sale Pending sign was removed at about the 4th of July weekend. The lowest half level is entirely separate from the other two levels of the house and is accessed only by an exterior door on the lower level. This is ideal for an unlimited, no spacing requirements, Type 1 STR. Having the existing house become an STR of any type would be a safety issue that could not be mitigated and would then result in at least 8 STRs within about a six house radius. The concentration of STRs in this area already makes compliance with Dundee Development Code 404.030. A. (2) impossible. In the absence of the requirements of Goal #10 and the Comprehensive Plan for 20 year population estimates and 20 year housing needs assessment, it's also impossible for the applicants to prove that the number and concentration of existing and possible future STRs in the area complies with the diverse housing required in these documents.

I hope that you will consider what I have presented very carefully. As this is the first C/U application for a standard STR, you are setting a precedent for the future. It is my belief that the lack of reasonable spacing requirements for all STRs, especially the standard STRs will, in the future, both destroy communities within Dundee, decrease the safety of the city, and will also decrease the supply of housing categories in the city if exceptions to the spacing requirement are granted. I have presented a legal basis for you to deny this C/U application.

You, as Planning Commissioners, are appointed officials of the City of Dundee. The adopted Mission for the City of Dundee is: "The Mission of City Government is to provide essential, quality public services in support of the livability, safety and viability of the Dundee Community."

Thank you for your consideration and for serving as volunteers on our Planning Commission.

Elizabeth Sundeen

392 SW Dogwood Drive

Dundee OR 97115

RECEIVED
SEP 26 2022
CITY OF DUNDEE

September 17th, 2022
To: Dundee Planning Commission
Re: Conditional Use Application (CU/STR 22-10) 425 SW Dogwood Dr

Dear Dundee Planning Commission,

I am the current owner of a short term rental within 200 feet of this application that sent in comments opposing this license for the initial hearing.
My opposition to this particular license is centered around the livability for permanent residents of Dundee when their "neighbors" are all nightly visitors. I would love for the planning commission to consider a policy that would allow for a certain number of licenses within a radius or city block.

I have been very lucky so far to have great support and communication from my current neighbors, but I fear that if the block gets crowded with short term rentals, that support will fade.

Another factor to consider is whether or not this will be run by someone local, or by a larger company like Vacasa or Itrip which is becoming more prevalent in the valley. I think it is important for neighbors to know exactly who they can contact if they have any concerns. All of my surrounding neighbors at the rental I own in Dundee have my email and cell phone, and I live a just a few miles away. During the summer when the rental is occupied the most, I am at the house at least 2x/week.

I recently read that the city of McMinnville is also reviewing their vacation rental policy because of the above concerns. I would love to see where they land and what the City of Dundee could "borrow" from McMinnville as I believe they have great regulations in place.

As a current vacation rental owner I do feel like a bit of a hypocrite opposing this. Please know that my opposition has more to do with the wonderful neighbors near my rental, and what the future looks like for them in Dundee.
I would be happy to discuss this matter further if requested.

Thank you for your consideration,
Virginia Pedersen
Owner - 172 SW Hawthorne Ct, Dundee, OR 97115
608.469.6123

Bryan Weil
160 SW Hawthorne Ct.
Dundee, OR 97115

November 28th, 2022

Dundee City Council,

My name is Bryan Weil and my wife and I with our two young daughters are neighbors to the subject property right below it on Hawthorne Ct (tax lot 2200). I am writing to express our opposition to the conditional use permit for short term rental at 425 SW Dogwood Drive. We currently have two short term rentals on neighboring properties and if this subject property was approved under a conditional use permit that would be three neighboring properties of ours that would be short term rentals and two right above us that are adjacent to each other on Dogwood Drive. Three of five neighboring properties would be short term rentals which makes up 60% of our neighbors. See the tax lot map below showing this. We moved to Dundee 10 years ago and love the city and are very involved in the community and people that live here. Having 60% of our neighbors being short term rentals takes away from that community feel and creates unnecessary traffic and noise to our neighborhood and city. Although most of the short-term rental guests are fairly quiet and respectful, we have had many times that the guests of these rentals are disrespectful with loud music past the allowed municipal code time, foul language, and illegal parking. We moved here to raise our daughters and these types of disturbances have not allowed us to easily do that and are only getting worse as more of these short term rentals have taken over this neighborhood. And on top of all these concerns with adding another short-term rental the Dundee municipal code clearly states in section 17.203.240.J.9 that "No Type II STR shall be located adjacent (contiguous to the property on the same side of the street) to any permitted Type II STR unit." For this municipal code reason and the reasons stated above we ask that you deny this request for conditional use.

Thanks,
Bryan Weil

City of Dundee

Short Term Rental and Conditional Use Permit STR/CU 22-10

6 December 2022 City Council Hearing

Mayor and City Council,

I am asking you to uphold the decision of the Planning Commission by denying this appeal for the same reasons I opposed this conditional use application at the Planning Commission hearing. The material I submitted for the 20 July 2022 Planning Commission hearing, the noticed 20 September 2022 City Council hearing, and this 6 December 2022 City Council hearing have all been submitted into the record of this 6 December 2022 hearing. As this hearing is focused on the Dundee Development Code, the Code citations I submitted are listed here. The supporting material is given below. To avoid repetition, I am speaking about the context of the effects of density and the impossibility of mitigating the existing and proposed STR densities.

Regarding Dundee Development Code 17.203.040 E (1), 17.404.030 A (1), and 17.404.030 A (2), this conditional use request should be denied because the addition of another standard STR to the existing high density of standard STRs in this immediate area creates a safety hazard that cannot be mitigated. The impact of potential future intermittent STRs and also future growth of the city should not be ignored.

Dundee Development Code 17.203.040 E. (1) states "The proposed STR will not present any burden on neighbors to the property."

Dundee Development Code 17.404.030 A. (1) states that negative impacts include but are not limited to noise, odor, safety, and esthetic considerations.

Dundee Development Code 17,404.A. (2) states "the negative impacts of the proposed use on adjacent properties and on the public must be mitigated. The numerous safety issues include vacant houses, criminal activities, and fundamental disruption of neighborhood patterns and interactions.

Oregon state land use laws, the Dundee Comprehensive Plan and the Dundee Development Code provide several protections including protections for developers and protections for the safety, livability, diversity and integrity of existing neighborhoods and cities. The primary issue with this conditional use application is increasing the density of standard STRs in a neighborhood where the existing STR density and the possibility of additional unconditionally permitted standard STRs and intermittent STRs in the immediate neighborhood cannot now be mitigated. Future growth should also be considered. Dundee's Riverside residential zoning is high density, ensuring substantial future growth. Dundee Code limits standard STRs to 5% of the total number of single

family houses; the only limit to density is the prohibition of side by side standard STRs on the same street. At this time, approximately 50 standard STRs are allowed – this number will increase substantially in the future as the Riverside develops. The density of STRs in desirable areas, as this neighborhood is, will inevitably increase. Your decision today will be setting a precedent and also a standard for the future.

Because immediate Code violations are handled as a nuisance by the Newberg Dundee Police Department, enforcement of the Code and also of any C/U conditions imposed is difficult to impossible. The complaints are not passed on to the City or to property managers and therefore will not be considered when the STR licenses are renewed.

Please note that the map showing the location of the subject property on the notices of the postponed 20 September and the 6 December council hearings did not include the locations of the six existing standard STRs in this neighborhood. This C/U application is requesting an increase in density, but the existing density was not provided to residents within the mandatory notice area.

Based on the Code sections cited, the density created by this STR/CU application cannot be mitigated.

The Dundee Comprehensive Plan requires that the adopted vision of the city be considered in all land use actions. This vision describes "the city's pleasant, natural environment". All of us value the pleasant, safe city we have and hope to keep for the future.

I hope that you will uphold the decision of our Planning Commission. I also hope that you will consider code revisions to address the density issues and to correct the obvious code error in 17.203.040 J (9) of the STR code. The error caused confusion at the Planning Commission hearing.

Thank you for considering this – and for volunteering your time and energy on our City Council.

Elizabeth Sundeen

392 SW Dogwood Drive

Dundee, Oregon

City of Dundee

Short Term Rental and Conditional Use Permit STR/CU 22-10

20 September 2022 City Council Hearing

Mayor and City Council

I am asking you to uphold the decision of the Planning Commission by denying this appeal for the same reasons I opposed a conditional use approval at the Planning Commission hearing. I am providing you with the material submitted to the Planning Commission as I am allowed to use all of this as a basis for appeals regarding this CU application.

Regarding Dundee Development Code 17.203.040 E (1), 17.404.030 A (1) and 17.404.030 A (2), I have demonstrated that the density of STRs in this area creates a safety hazard that cannot be mitigated. I will emphasize that the Planning Commission packet did not show the location of the six (at least) existing STRs in the immediate vicinity of this conditional use application. Neighbors knowing each other and also knowing the normal patterns of life in the neighborhood, in cooperation with our approachable and responsive NDPD, is essential for safety. I have also become aware of issues with vacant houses. Please read below for all the reasons I consider this to be a safety issue that cannot be mitigated.

I am particularly concerned about densities of STRs after seeing the small, closely spaced, housing developments in Newberg. With high density residential zoning in place in the Riverside portion of the city, in the future we will have a much higher number of STRs within the 5% limit. Concentrating this number in part of the city will increase the safety issues. Your decision will set a precedent for the future. Because of this, I would appreciate you, as a council, initiating a code revision process to consider the future density issues. The only restriction prohibiting adjacent, side by side, STRs is not adequate protection for neighborhoods.

I would also appreciate you, as a council, initiating a code revision process to correct the confusion regarding 17.203.240 H. and J. that occurred at the Planning Commission hearing.

Thank you very much for considering my comments.

Elizabeth Sundeen

392 SW Dogwood Drive,  Dundee, Oregon

City of Dundee

Type III Short Term Rental / Conditional Use Process

File Number: STR/CU 2022-10

20 July 2022 Public Hearing

City of Dundee Planning Commission

Melody Osborne

I am asking the Planning Commission to deny this Conditional Use on the basis of the Oregon Statewide Planning Goal 10, Housing; the Dundee Comprehensive Plan; the Dundee Development Code. There are also relevant errors and omissions in the materials presented to you.

Oregon Statewide Planning Goal #10:

Goal #10 requires all comprehensive plans to conform to the requirements of the Goal. Goal 10 also requires a 20 year projection of Housing Needs Assessment for the purpose of guaranteeing an adequate supply of housing to serve people at a variety of income levels, a range of places to live, and different community densities. The Housing Needs Assessment is based on a 20 year population projection.

The City of Dundee Comprehensive Plan: Land Use and Urbanization requires a 20 year population projection to identify land needs to support that population.

The City of Dundee Comprehensive Plan: Housing requires provision for a variety of housing types to meet the needs of different family sizes and incomes.

The Dundee Comprehensive Plan appearing on the City of Dundee website as official does not include a population projection beyond the year 2020. The applicant has not provided a 20 year population projection and has not provided a housing needs assessment. This is significant, as Dundee has a large acreage available for development. A portion of this acreage has been rezoned high density residential. The Dundee Development Code limits the total number of standard STR, to 5% of existing housing

units. Currently, that allows approximately 50 standard STRs in the city. It is reasonable to expect that, within the next 20 years, significant Riverside housing development will happen, thus increasing the total number of standard STRs allowed in the city. It is reasonable to estimate the number of standard STRs allowed to increase to 100 – 150. If all standard STRs continue to be clustered in the area where they are now clustered, a significant, required, segment of housing in Dundee will become unavailable. Burden of proof is on the applicant to prove that this will not happen. The applicant has not done so.

The Dundee Comprehensive Plan requires that the Vision of the city be considered in all land use actions. The Vision references "the city's pleasant, natural environment". The Conclusion states "Dundee is a model for citizen engagement, working together with community members, businesses, and developers, and government entities to provide effective government and public/private partnerships in the creation of a pleasant, livable small town. There is not another place in the country like Dundee that has succeeded in creating such an attractive and harmonious atmosphere." An area of the city dominated by STRs does not match this Vision.

Dundee Development Code 17.203.040 E. (1) states "The proposed standard STR will not present any burden on neighbors to the property."

Dundee Development Code 17.404.030 A. (1) states that negative impacts include but are not limited to noise, odor, safety and esthetic considerations

Dundee Development Code 17.404.030 A. (2) states "The negative impacts of the proposed use on adjacent properties and on the public must be mitigated."

Dundee Development Code 17.404.030 B. gives the Planning Commission essentially unlimited power to condition a Conditional Use approval. Unfortunately, conditioning sufficient to meet the above three code requirements and enforcing the conditions are two entirely different matters.

Dundee Development Code 203.242. K. requires immediate complaints to be directed to the police or to the property management. Property management is required to keep a log of complaints to be presented to the city at the time of renewal of the business license. As a practical matter, this doesn't work. Most immediate complaints, if not all, are now and probably will continue to be made to the police. These complaints are never forwarded to either property management or to the city and therefore will never be recorded as complaints. The police are able to handle a complaint at a moment in time, but cannot prevent recurrences either same day (usually night/very early morning in our neighborhood) or recurring over longer periods of time. Safety is a significant factor in considering this Conditional Use request. Illegal activities at STRs can easily be arranged

to be unnoticeable to the surrounding properties. This may be why airb&b at one time required background checks for renters. There are, between 1st and 5th , including a corner house on 5th, eleven young children. There are at least two more immediately above this area on Brier. There are also visiting grandchildren at several houses within this area. The proposed STR is within a very short distance of Billick Park. It is within a short distance of the Dundee Elementary School. The applicant did not address the unlimited number of Type 1 STRs and the impact adding these will have on safety in this immediate area. Having a neighborhood community of people who know and watch out for each other is very important to stopping criminal activities. Concentrating too many STRs of all types in one part of the city eliminates this caring, knowledgeable community. We are fortunate to have a responsive and effective police department which the community can contact, if such a community actually exists. This is an important point when I discuss the errors and omissions. Burden of proof is on the applicant to prove that all necessary mitigation requirements, particularly that for safety, can be met. Especially considering the applicant's omission of Type 1 STRs, errors and other omissions, the applicant has not proved this.

Errors and Omissions:

The applicant did not address the impacts of Type 1 STRs at all and did not provide the locations of existing standard STRs in the immediate area. Page 47 of your packet states that "The subject property is shown in red on the following map". Other unlabeled properties on this map appear in another color. These properties are existing standard STRs. The map omits two additional existing standard STRs, one on lot 3109 and one above and adjacent to lot 4002. Omitting two standard STRs – and not mentioning the at least four others in the immediate area of houses, the park, and the school– gives a significantly distorted view of the existing concentration of the STRs.

Page 8 of your packet notes that the lot to the south is vacant and that the owners have contacted the city regarding licensing an STR on a future house there. A two and a half story house exists on this property. I'm remembering that construction began in late November 2021 – December 2021. The For Sale/Sale Pending sign was removed at about the 4th of July weekend. The lowest half level is entirely separate from the other two levels of the house and is accessed only by an exterior door on the lower level. This is ideal for an unlimited, no spacing requirements, Type 1 STR. Having the existing house become an STR of any type would be a safety issue that could not be mitigated and would then result in at least 8 STRs within about a six house radius. The concentration of STRs in this area already makes compliance with Dundee Development Code 404.030. A. (2) impossible. In the absence of the requirements of Goal #10 and the Comprehensive Plan

for 20 year population estimates and 20 year housing needs assessment, it's also impossible for the applicants to prove that the number and concentration of existing and possible future STRs in the area complies with the diverse housing required in these documents.

I hope that you will consider what I have presented very carefully. As this is the first C/U application for a standard STR, you are setting a precedent for the future. It is my belief that the lack of reasonable spacing requirements for all STRs, especially the standard STRs will, in the future, both destroy communities within Dundee, decrease the safety of the city, and will also decrease the supply of housing categories in the city if exceptions to the spacing requirement are granted. I have presented a legal basis for you to deny this C/U application.

You, as Planning Commissioners, are appointed officials of the City of Dundee. The adopted Mission for the City of Dundee is: "The Mission of City Government is to provide essential, quality public services in support of the livability, safety and viability of the Dundee Community."

Thank you for your consideration and for serving as volunteers on our Planning Commission.

Elizabeth Sundeen

392 SW Dogwood Drive

Dundee OR 97115

The November 15, 2022 City Council minutes will be provided separately prior to the meeting.

# 2023 MEETING CALENDAR

## CITY COUNCIL

**Time: 7:00 pm to 10:00 pm**
**Location: Fire Hall or ZOOM**

| | |
|---|---|
| Tuesday | January 3rd |
| Tuesday | January 17th |
| Tuesday | February 7th |
| Tuesday | February 21st |
| Tuesday | March 7th |
| Tuesday | March 21st |
| Tuesday | April 4th |
| Tuesday | April 18th |
| Tuesday | May 2nd |
| Tuesday | May 16th |
| Tuesday | June 6th |
| Tuesday | June 20th |
| Tuesday | July 5th |
| Tuesday | July 18th |
| Tuesday | August 1st |
| Tuesday | August 15th |
| Tuesday | September 5th |
| Tuesday | September 19th |
| Tuesday | October 3rd |
| Tuesday | October 17th |
| Tuesday | November 7th |
| Tuesday | November 21st |
| Tuesday | December 5th |
| Tuesday | December 19th |

## PLANNING COMMISSION

**Time: 7:00 pm to 10:00 pm**
**Location: City Hall or ZOOM**

| | |
|---|---|
| Wednesday | January 18th |
| Wednesday | February 15th |
| Wednesday | March 15th |
| Wednesday | April 19th |
| Wednesday | May 17th |
| Wednesday | June 21st |
| Wednesday | July 19th |
| Wednesday | August 16th |
| Wednesday | September 20th |
| Wednesday | October 18th |
| Wednesday | November 15th |
| Wednesday | December 20th |

## BUDGET COMMITTEE

**Time: 7:00 pm to 10:00 pm**
**Location: Fire Hall or ZOOM**

| | |
|---|---|
| Thursday | April 20th |
| Thursday | April 27th |
| Thursday | May 4th |
| Thursday | May 11th |

## MUNICIPAL COURT

**Dates are subject to change.**
**Time 5:30 pm to 8:00 pm**
**Location: City Hall**

| | |
|---|---|
| Tuesday | January 10th |
| Tuesday | February 14th |
| Tuesday | March 14th |
| Tuesday | April 11th |
| Tuesday | May 9th |
| Tuesday | June 13th |
| Tuesday | July 11th |
| Tuesday | August 8th |
| Tuesday | September 12th |
| Tuesday | October 10th |
| Tuesday | November 14th |
| Tuesday | December 12th |

## PARKS ADVISORY COMMITTEE

**Time: 7:00 pm to 10:00 pm**
**Location: City Hall or ZOOM**

| | |
|---|---|
| Wednesday | January 4th |
| Wednesday | February 1st |
| Wednesday | March 1st |
| Wednesday | April 5th |
| Wednesday | May 3rd |
| Wednesday | June 7th |
| Wednesday | July 5th |
| Wednesday | August 2nd |
| Wednesday | September 6th |
| Wednesday | October 4th |
| Wednesday | November 1st |
| Wednesday | December 6th |

## TOURISM COMMITTEE

**Time: 8:30 am to 10:00 am**
**Location: City Hall or ZOOM**

| | |
|---|---|
| Wednesday | January 25th |
| Wednesday | February 22nd |
| Wednesday | March 22nd |
| Wednesday | April 26th |
| Wednesday | May 24th |
| Wednesday | June 28th |
| Wednesday | July 26th |
| Wednesday | August 23rd |
| Wednesday | September 27th |
| Wednesday | October 25th |
| Wednesday | November 22nd |
| Wednesday | December 27th |

## HOLIDAYS: CITY HALL CLOSED

| | | |
|---|---|---|
| Monday | January 2nd | New Year's Day (Observed) |
| Monday | January 16th | Martin Luther King Jr. Day |
| Monday | February 20th | President's Day |
| Monday | May 29th | Memorial Day |
| Tuesday | July 4th | Independence Day |
| Monday | September 4th | Labor Day |
| Friday | November 10th | Veteran's Day (Observed) |
| Thursday | November 24th | Thanksgiving Day |
| Friday | November 25th | Day after Thanksgiving |
| Friday* | December 22nd | Closing at 12:00 PM (Christmas Eve Obsv.) |
| Monday | December 25th | Christmas |
| Friday* | December 29th | Closing at 12:00 PM (N/Y Eve Obsv.) |

*Dates moved to the prior Friday as the Eve and Holiday fall on a Sunday/Monday

# LIQUOR LICENSE APPLICATION



**Check** the appropriate license request option:

☑ New Outlet | ☐ Change of Ownership | ☐ Greater Privilege | ☐ Lesser Privilege

**Select** the license type you are applying for.

More information about all license types is available online.

**Full On-Premises**

☐Commercial

☐Caterer

☐Public Passenger Carrier

☐Other Public Location

☐For Profit Private Club

☐Nonprofit Private Club

**Winery**

☐Primary location

Additional locations: ☑2nd ☐3rd ☐4th ☐5th

**Brewery**

☐Primary location

Additional locations: ☐2nd ☐3rd

**Brewery-Public House**

☐Primary location

Additional locations: ☐2nd ☐3rd

**Grower Sales Privilege**

☐Primary location

Additional locations: ☐2nd ☐3rd

**Distillery**

☐ Primary location

Additional tasting locations: ☐2nd ☐3rd ☐4th ☐5th ☐6th

☐ **Limited On-Premises**

☐ **Off Premises**

☐ **Warehouse**

☐ **Wholesale Malt Beverage and Wine**

**INTERNAL USE ONLY**

**Application received:** 09/03/2022

**Minimum documents acquired:** 09/03/2022

**LOCAL GOVERNING BODY USE ONLY**

**City/County name:**

**Date application received:**

Optional: Date Stamp

☐ Recommend this license be granted

☐ Recommend this license be denied

Printed Name _____ Date _____

**Return this form to:**

Investigator name: L Tompkins

Email: lysa.tompkins@oregon.gov

# LIQUOR LICENSE APPLICATION



## APPLICANT INFORMATION

**Identify** the applicants applying for the license. This is the entity (example: corporation or LLC) or individual(s) applying for the license. Please add an additional page if more space is needed.

| Name of entity or individual applicant #1: | Name of entity or individual applicant #2: |
|---|---|
| Rose & Arrow, LLC | |
| Name of entity or individual applicant #3: | Name of entity or individual applicant #4: |
| | |

## BUSINESS INFORMATION

**Trade Name** of the Business (name customers will see):
Rose & Arrow Estate

| Business phone number: | Business email: |
|---|---|
| (503) 487-6341 | compliance@rosearrowestate.com |

**Premises street address** (The physical location of the business and where the liquor license will be posted):
531 N Hwy 99W

| City: | Zip Code: | County: |
|---|---|---|
| Dundee | 97115 | Yamhill |

**Business mailing address** (where we will send any items by mail as described in OAR 845-004-0065[1].):
PO Box 13090

| City: | State: | Zip Code: |
|---|---|---|
| Portland | OR | 97213-0090 |

| Does the business address currently have an OLCC liquor license? | Does the business address currently have an OLCC marijuana license? |
|---|---|
| ☑ Yes ☐ No | ☐ Yes ☑ No |

## APPLICATION CONTACT INFORMATION

**Contact Name:**
Tim Moore

| Phone number: | Email: |
|---|---|
| 503-753-4977 | compliance@rosearrowestate.com |

Mailing address:
PO Box 13090

| City: | Zip Code: | County: |
|---|---|---|
| Portland | 97213-0090 | Multnomah |

Please note: liquor license applications are public records.

# LIQUOR LICENSE APPLICATION



## ATTESTATIONS

By signing this form, you attest that each of the following statements are true. I understand the Commission may require a licensee to provide proof of any of the below or below referenced documents at any time.

I understand that marijuana is **prohibited** on the licensed premises. This includes marijuana use, consumption, ingestion, inhalation, samples, give-away, sale, etc. I attest that all answers on all forms and documents, and all information provided to the OLCC as a part of this application are true and complete.

I affirm that I have read OAR 845-005-0311 and all individuals (sole proprietors) or entities with an ownership interest (other than waivable ownership interest per OAR 845-005-0311[6]) are listed as license applicants in #2 above. I understand that failure to list an individual or entity who has an un-waivable ownership interest in the business may result in denial of my license or the OLCC taking action against my license in the event that an undisclosed ownership interest is discovered after license issuance.

| Print name | Signature | Date | Atty. Bar Info (if applicable) |
|---|---|---|---|
| Ian Lombard | | 8.22.22 | XXXXXXXXXXXXXX |
| | | | |
| | | | |
| | | | |

OREGON LIQUOR CONTROL COMMISSION

# INDIVIDUAL HISTORY FORM

PRINT FORM

RESET FORM

| | | | |
|---|---|---|---|
| 1. Name (Print): | LOMBARD<br>Last | IAN<br>First | Middle |

2. Other names used (maiden, other):

3. Do you have a Social Security Number (SSN) issued by the United States Social Security Administration? Yes ☒ No ☐
If yes, you must list your SSN: [redacted]

**SOCIAL SECURITY NUMBER DISCLOSURE:** As part of your application for an initial or renewal license, Federal and State laws require you to provide your Social Security Number (SSN) to the Oregon Liquor Control Commission (OLCC) for child support enforcement purposes (42 USC § 666(a)(13) & ORS 25.785). If you are an applicant or licensee and fail to provide your SSN, the OLCC may refuse to process your application. Your SSN will be used only for child support enforcement purposes unless you indicate below.

Based on our authority under ORS 471.311 and OAR 845-005-0312(6), we are requesting your voluntary consent to use your SSN for the following administrative purposes only: to match your license application to your Alcohol Server Education records (where applicable), and to ensure your identity for criminal records checks. OLCC will not deny you any rights, benefits or privileges otherwise provided by law if you do not consent to use of your SSN for these administrative purposes (5 USC§ 552(a).

4. Do you consent to the OLCC's use of my SSN as described above? Check this box: ☑

| | | | |
|---|---|---|---|
| 5. Date of Birth (DOB): | 05<br>(mm) | 20<br>(dd) | 1972<br>(yyyy) |

| | |
|---|---|
| 6. Driver License or State ID #: [redacted] | 7. State OREGON |

8. Contact Phone: 503-298-8982

9. E-mail Address: ian@ caspariancapital.com

| | | | | |
|---|---|---|---|---|
| 10. Mailing Address: | 4021 SW 45th Ave<br>(Number and Street) | Portland<br>(City) | OR<br>(State) | 97221<br>(Zip Code) |

11. In the past 10 years, have you been convicted of a felony or a misdemeanor in a U.S. state outside of Oregon?

No ☒ Yes ☐ (If yes, explain in the space provided, below) Unsure ☐ Choose this option and provide an explanation if, for example: you were arrested or went to court, but are unsure of whether there was a conviction; you paid a fine or served probation or parole, but are unsure of whether there was a conviction; or if you know you had a conviction, but you are unsure of whether the conviction has been removed from your record, etc.

No CCH 10/31/22 LT

OREGON LIQUOR CONTROL COMMISSION

# INDIVIDUAL HISTORY FORM

12. Do you, or any entity that you are a part of, **currently hold** or **have you previously held** a recreational marijuana license in Oregon? (Note: marijuana worker permits are not marijuana licenses.)

No ☒ Yes ☐ Please list licenses (and year(s) licensed) below Unsure ☐ Please include an explanation:

13. Do you, or any entity that you are a part of, hold an alcohol license in a U.S. state outside of Oregon?

No ☒ Yes ☐ Please list licenses (and year(s) licensed) below Unsure ☐ Please include an explanation:

14. Do you or any entity that you are a part of, have any other liquor license applications pending with the OLCC?

No ☒ Yes ☐ Please list applications below Unsure ☐ Please include an explanation:

You must sign your own form (electronic signature acceptable). Another individual, such as your attorney or an individual with power of attorney, ***may not*** sign your form.

**Affirmation**

**Even if I receive assistance in completing this form, I affirm by my signature below, that my answers on this form are true and complete. I understand the OLCC will use the above information to check my records, including but not limited to my criminal history. I understand that if my answers are not true and complete, the OLCC may deny my license application.**

| Name (Print): | LOMBARD Last | IAN First | Middle |
|---|---|---|---|
| **Signature:** | | **Date:** 8.3.21 | |

**This box for OLCC use ONLY**

Yes Does the individual currently hold, or has the individual previously held, an OLCC- issued liquor license?

OREGON LIQUOR CONTROL COMMISSION

# BUSINESS INFORMATION

*Please Print or Type*

Applicant Name: ROSE & ARROW, LLC Phone: (503) 487-6341

Trade Name (dba): ROSE AND ARROW ESTATE

Business Location Address: 531 N HWY 99W

City: DUNDEE ZIP Code: 97115

## DAYS AND HOURS OF OPERATION

Business Hours:

| | | | |
|---|---|---|---|
| Sunday | 11 AM | to | 5 PM |
| Monday | 11 AM | to | 5 PM |
| Tuesday | 11 AM | to | 5 PM |
| Wednesday | 11 AM | to | 5 PM |
| Thursday | 11 AM | to | 5 PM |
| Friday | 11 AM | to | 5 PM |
| Saturday | 11 AM | to | 5 PM |

Outdoor Area Hours:

| | | | |
|---|---|---|---|
| Sunday | | to | |
| Monday | | to | |
| Tuesday | | to | |
| Wednesday | | to | |
| Thursday | | to | |
| Friday | | to | |
| Saturday | | to | |

11 AM to 5 PM

The outdoor area is used for:

☒ Food service Hours: 11 AM to 5 PM

☒ Alcohol service Hours: 11 AM to 5 PM

☐ Enclosed, how

The exterior area is adequately viewed and/or supervised by Service Permittees.

LT (Investigator's Initials)

Seasonal Variations: ☑ Yes ☐ No If yes, explain: Outdoor Seating is Seasonal

## ENTERTAINMENT

Check all that apply: N/A

- ☐ Live Music
- ☐ Recorded Music
- ☐ DJ Music
- ☐ Dancing
- ☐ Nude Entertainers
- ☐ Karaoke
- ☐ Coin-operated Games
- ☐ Video Lottery Machines
- ☐ Social Gaming
- ☐ Pool Tables
- ☐ Other:

## DAYS & HOURS OF LIVE OR DJ MUSIC

| | | | |
|---|---|---|---|
| Sunday | | to | |
| Monday | | to | |
| Tuesday | | to | |
| Wednesday | | to | |
| Thursday | | to | |
| Friday | | to | |
| Saturday | | to | |

## SEATING COUNT

Restaurant:

Lounge:

Banquet:

Outdoor: 40

Other (explain): Tasting Room - 19

Total Seating: 59

**OLCC USE ONLY**

Investigator Verified Seating: ___(Y) ✓(N)

Investigator Initials: LT

Date: 10/31/22

**I understand if my answers are not true and complete, the OLCC may deny my license application.**

**Applicant Signature:** [signature] **Date:** 8-22-22

**1-800-452-OLCC (6522)**

***www.oregon.gov/olcc***

*(rev. 12/07)*

# AGENDA REPORT

**To:** **Mayor Russ and City Council**

**From:** **Steve Dahl, City Administrator**

**Date** **December 01, 2022**

**Reason:** **Appointment of the Tourism Committee**

---

The terms of the Tourism Committee are two years and expire on December 31st. Committee membership qualifications include:

- At least three members of the committee must live within the City of Dundee
- Members who do not live within the City of Dundee must be associated with a business within city limits
- One member shall be a member of the City Council and chair the meetings

The membership of the Tourism Committee is as follows:

| Name | End Date | Company |
|---|---|---|
| Bruce Starr | December 2024 | City Councilor |
| Ted Crawford | December 2023 | Past Chair |
| Mary Gregoire | December 2024 | Olive Branch |
| Jennifer Sitter | December 2024 | Red Hills Market/Lofts |
| Megan Carda | December 2024 | Lifestyle Properties |
| Ayla Holstein | December 2023 | Argyle Winery |
| Sondra Storm | December 2023 | Inn at Red Hills |

# AGENDA REPORT

| | |
|---|---|
| **To:** | **Mayor Russ and City Council** |
| **From:** | **Steve Dahl, City Administrator** |
| **Date** | **December 01, 2022** |
| **Reason:** | **Third Amendment to the ODOT (Oregon Department of Transportation Bypass Loan** |

---

**Background:**

In July of 2013, the City of Dundee agreed to help pay for a bypass between Newberg and Dundee to minimize the amount of traffic that flows through both cities. In September of 2022, the Council approved the third amendment to this loan. Since the Council approved the loan, ODOT and the Bypass Committee have altered and changed some of the language in the loan documents to better clarify concerns that were expressed by the Bypass Committee and the City of Dundee attorneys.

The basics of the loan stay the same. The loan will run from December 6, 2022, to July 31, 2069. The original loan will be rolled over in the loan for a grand total of $500,631.85. Payments for the loan will be yearly installments of $20,373 that includes principal and interest of 3.23%.

**Motion:**

I move to approve Resolution number 2022-19, the modified third agreement between the Oregon Transportation Infrastructure Bank and the City of Dundee. Loan Agreement OTIF-0046.

**RESOLUTION NO. 2022-19**

**A RESOLUTION AUTHORIZING AND APPROVING AMENDMENT #3 TO THE LOAN AGREEMENT BETWEEN THE STATE OF OREGON ACTING BY AND THROUGH ITS DEPARTMENT OF TRANSPORTATION AND THE CITY OF DUNDEE, A MUNICIPAL CORPORATION OF THE STATE OF OREGON, DATED JULY 1, 2013 (THE "LOAN AGREEMENT").**

**WHEREAS**, on July 1, 2013, the State of Oregon, acting by and through its Department of Transportation (the "State") and the City of Dundee (the "City") entered into Loan Agreement OTIF-0046, as amended from time to time, (the "Loan Agreement") in the principal loan amount of Three Hundred Fifteen Thousand Two Hundred and No/100 Dollars (the "Loan Amount"), as financing by the State for a portion of Dundee's construction costs of the Newberg-Dundee Bypass (the "Project"); and

**WHEREAS**, in connection with the Loan Agreement, on July 1, 2013, the City also executed and delivered to the State a Promissory Note in the Loan Amount; and

**WHEREAS**, Phase 1 of the Project is complete and the State is ready to commence Phase 2 of the Project consisting of the design and construction of a two-lane roadway section from the current connection at OR-18/OR 219 to OR-99W north of the City of Newberg; and

**WHEREAS**, the State is also ready to commence Phase 3 of the Project consisting of a two-lane roadway section from the current connection at OR-99W south of the City of Dundee to OR-18 north of the City of Dayton; and

**WHEREAS**, the State, by and through the Oregon Transportation Commission, and the City desire to modify certain terms and conditions of the Loan Agreement; and

**WHEREAS**, the modification of the Loan Agreement provides additional funding to assist the City to finance a portion of the construction costs for Phase 2 and Phase 3 and will be in the form of a refinance of the original Loan Amount and an increase in the principal amount of Three Hundred Twenty Thousand and No/100 Dollars to a maximum aggregate principal loan amount of Five Hundred Sixty Thousand Six Hundred Thirty-One and 85/100 Dollars ($560,631.85); and

**WHEREAS**, the City Council previously approved Resolution 2022-16 authorizing and directing the City Administrator to execute Amendment #3 to the Loan Agreement; however, before the Amendment was executed, certain provisions of Amendment #3 were revised by the State; and

**WHEREAS**, it is in the interest of the City of Dundee to enter into Amendment # 3 of the Loan Agreement.

**NOW, THEREFORE, BE IT RESOLVED BY THE CITY OF DUNDEE AS FOLLOWS:**

**Section 1.** That the City Administrator is authorized and directed to execute Amendment #3 to the Loan Agreement, on behalf of the City of Dundee, and such other agreements, documents or certificates as may be required to modify the Loan Agreement to a maximum aggregate principal loan amount of Five Hundred Sixty Thousand Six Hundred Thirty-One and 85/100 Dollars ($560,631.85).

**Section 2.** That the City Administrator is further authorized and directed to execute the Promissory Note, attached to Amendment # 3 of the Loan Agreement.

**Section 3.** This Resolution shall be effective upon its passage by the Dundee City Council.

**PASSED by the City Council of Dundee this 6th day of December, 2022.**

**Approved:**

_____
David Russ, Mayor

**Attest:**

_____
Steve Dahl, City Administrator/Recorder

**AMENDMENT #3 TO LOAN AGREEMENT**

THIS THIRD AMENDMENT TO LOAN AGREEMENT ("Amendment") is made and entered into as of the _____ day of December 2022, by and between the State of Oregon, acting by and through its Department of Transportation ("ODOT" or the "State"), and City of Dundee, Oregon (the "Borrower"). The reference number for this Loan Agreement is OTIF-0046. Capitalized terms not otherwise defined herein shall have the meanings assigned to them in the Loan Agreement (as defined below).

**WITNESSETH**

**WHEREAS**, the State and the Borrower entered into Loan Agreement OTIF-0046 dated July 1, 2013, as amended from time to time, (the "Loan Agreement"), pursuant to which the State agreed to make a loan to Borrower in the principal amount of Three Hundred Fifteen Thousand Two Hundred and No/100 Dollars ($315,200.00) (the "Loan") to finance Borrower's portion of the costs of construction of the Newberg-Dundee Bypass (the "Project");

**WHEREAS**, in connection with the Loan, the Borrower executed and delivered to the State a promissory note dated July 1, 2013 (as amended, extended, or renewed from time to time, the "Note"); and

**WHEREAS**, the State and the Borrower desire to modify certain terms and conditions of the Loan Agreement consistent with the changes to the Loan Amount, Project and Project schedule.

**NOW, THEREFORE**, for good and valuable consideration, the receipt and sufficiency of which is hereby acknowledged, the State and the Borrower mutually agree as follows:

1. The definition of "Maturity Date," in Section 1.01 of the Loan Agreement is amended and restated to read as follows:

> "Maturity Date" means the date on which the Loan is payable in full, which date shall be July 01, 2069.

2. The definition of "Project Completion Date," in Section 1.01 of the Loan Agreement is amended and restated to read as follows:

> "Project Completion Date" means the earlier of
>
> (i) the date on which all of the proceeds of the Loan, including any investment earnings derived from the investment of such proceeds, have been spent; or
>
> (ii) the date on which the State completes construction of the Project; or

(iii) July 1, 2036.

3. The definition of "Project Completion Deadline," in Section 1.01 of the Loan Agreement is amended and restated to read as follows:

"Project Completion Deadline" means July 1, 2036.

4. Section 2.01 of the Loan Agreement is amended and restated to read as follows:

**Section 2.01.** Loan Amount. On December___, 2022, the State hereby agrees to make to the Borrower, and the Borrower agrees to borrow and accept from the State, (i) a refinancing of the Loan in the amount of Two Hundred Forty Thousand Six Hundred Thirty-one and 85/100 Dollars ($240,631.85) and (ii) an increase in the Loan in the principal amount of Three Hundred Twenty Thousand and No/100 Dollars ($320,000.00) for a maximum aggregate principal Loan amount of Five Hundred Sixty Thousand Six Hundred Thirty-one and 85/100 Dollars ($560,631.85).

5. Section 2.03 of the Loan Agreement is amended and restated to read as follows:

**Section 2.03.** Loan Term. The term of the Loan is set forth in the Note. The term of the Loan commences on the date of the last disbursement of the Loan and ends on the Maturity Date, which is July 1, 2069.

6. Section 2.04 of the Loan Agreement is amended and restated to read as follows:

**Section 2.04.** Interest. The principal balances due under the Note shall bear interest at the rate of Three and 23/100 percent (3.23%) per annum. Interest shall be computed on the basis of a 360-day year, consisting of twelve (12), thirty (30) day months. Interest shall be due and payable in arrears and shall accrue on the outstanding principal balance from the date hereof until the principal amount of the Note, together with accrued unpaid interest thereon, is paid in full.

7. New Section 3.11 is added to the Loan Agreement as follows:

**Section 3.11.** Matching Funds. Matching funds of the Borrower in the amount of Five Hundred Sixty Thousand Six Hundred Thirty-one and 85/100 Dollars ($560,631.85) are available and committed to the Project.

8. Section 4.01 of the Loan Agreement is amended and restated to read as follows:

**Section 4.01.** Conditions Precedent to Loan. The State shall be under no obligation to make the loan pursuant to the terms hereof unless the Borrower delivers to the State, on or prior to December 31, 2022, the following documents in form and substance satisfactory to the State and its Counsel:

(a) An opinion of Borrower's Counsel to the effect that:

(i) The Borrower is duly formed and operating under applicable State of Oregon law,

(ii) The Borrower has full legal right and authority to execute and deliver the Loan Agreement and to observe and perform its duties, covenants, obligations and agreements hereunder and to provide financing for the Borrower's Portion of the Costs of the Project,

(iii) The Loan Agreement has been authorized pursuant to official action of the Borrower that has been adopted and authorized in accordance with applicable Oregon law,

(iv) The Loan Agreement has been duly authorized and executed and delivered by Authorized Officers of the Borrower and constitutes the legal, valid and binding obligations of the Borrower enforceable in accordance with its terms,

(v) The authorization, execution and delivery of the Loan Agreement by the Borrower, the observation and performance by the Borrower of its duties, covenants, obligations and agreements hereunder, the consummation of the transactions contemplated herein and the financing by the Borrower of the Borrower's Portion of the Costs of the Project do not and will not contravene any existing law, rule or regulation or any existing order, injunction, judgment, or decree of any court or governmental or administrative agency, authority or person having jurisdiction over the Borrower or its property or assets or result in a breach or violation of any of the terms and provisions of, or constitute a default under, any existing agreement to which the Borrower is a party or by which the Borrower or its property or assets is bound,

(vi) All approvals, consents or authorizations of, or registrations or filings with, any governmental or public agency, authority or person required on the part of the Borrower in connection with the authorization, execution, delivery and performance of the Loan Agreement and its undertaking to provide a portion of the financing for the Project have been obtained or made to the extent it is possible to obtain or make them on or prior to the Loan Closing Date, and

(vii) There is no litigation or other proceeding pending or threatened in any court or other tribunal of competent jurisdiction (either State of Oregon or federal) questioning the creation, organization or existence of the Borrower, the validity, legality or enforceability of the Loan Agreement or the Borrower's authority to finance Borrower's

Portion of the Costs of the Project (such opinion or portions of such opinion may be given by one or more counsel).

(b) Counterpart of this Loan Agreement duly executed and delivered by an Authorized Officer of the Borrower;

(c) The Note duly executed and delivered by an Authorized Officer of the Borrower;

(d) Copy of the official action of the governing body of the Borrower authorizing the execution and delivery of this Loan Agreement and the documents, instruments and agreements required by this Loan Agreement, certified by an Authorized Officer of the Borrower;

(e) Such other certificates, documents, opinions and information as the State may require.

9. Section 4.02(c) of the Loan Agreement is amended and restated to read as follows:

**Section 4.02**. Conditions to Disbursement.

(c) Further, the State shall have no obligation to make any disbursement to ODOT on behalf of the Borrower if:

(i) On or before disbursement, there has been a change in the Act so that the Project is no longer eligible for financial assistance authorized by this Loan Agreement;

(ii) If ODOT does not receive sufficient funding, appropriations, limitation, allotments and other expenditure authority to allow ODOT or OTIF, in the exercise of its reasonable administrative discretion, to provide such funding;

(iii) The requisition is submitted by the Borrower after the Project Completion Date; or

(iv) The closing(s) for the loans to be made by the State to the Other Applicants for the Project, which together with the Loan to the Borrower, total the Local Government Share, have not occurred.

**10.** Section 5.06 of the Loan Agreement is amended and restated to read as follows:

**Section 5.06.** Proportionality Formula for Payment Requisitions. At the time of the first payment requisition from Borrower, ODOT shall state its estimate of the total Costs of the Project. The Borrower and the Other Applicants will be paying to ODOT a portion of the Costs of the Project for all three Project Phases in the maximum aggregate loan amount of

$33,773,470 (collectively, the "Local Government Share"), broken down as follows: (i) a maximum loan amount of $16,000,000 for Phase 1, (ii) a maximum loan amount of $9,000,000 for Phase 2(b) (as defined by ODOT); and (iii) no less than $8,773,470 for Phase 3. Thus, the total maximum loan amount combined for Phases 2(b) and 3 equals $17,773,470. The Local Government Share does not include the Loan Fees. As of June 24, 2020, OTIB has disbursed the entirety of the original loan proceeds in the amount of $16,000,000. As between the Borrower and the Other Applicants for Phases 2 and 3 of the Project, an Applicant shall pay its portion of the aggregate payments made by all the Applicants for the Costs of Phases 2 and 3 of the Project in accordance with the applicable percentage set forth below:

| | |
|---|---|
| Yamhill County | 63.48% |
| City of McMinnville | 20.17% |
| City of Newberg | 14.57% |
| City of Dundee | 1.78% |

The Borrower Portion of the Costs of the Project and the portion of the Costs of the Project for each of the Other Applicants shall be determined by multiplying the applicable percentage set forth above for an Applicant by $17,773,470 divided by the Costs of the Project estimated by ODOT at the time of the first payment requisition. These percentages for the Borrower and the Other Applicants, as well as ODOT's share of the Costs of the Project, shall remain constant during the Project with respect to all payment requisitions. For example:

If the Costs of the Project are estimated by ODOT at the time of the first payment requisition to be $ $469,600,000, then the combined share of the Costs of the Project to be paid by the Borrower and the Other Applicants for the first and all subsequent requisitions will be 3.78481 percent of the Costs of the Project up to a maximum aggregate payment of $17,773,470. If the first requisition is in the amount of $10,000,000, then the portion of such requisition payable by Borrower and the Other Applicants shall be $378,481.05 allocated to Borrower and the Other Applicants as follows:

| | | |
|---|---|---|
| Yamhill County | 2.40248% | $240,247.87 |
| City of McMinnville | .76358% | $76,358.18 |
| City of Newberg | .55129% | $55,128.83 |
| City of Dundee | .06746% | $6,746.17 |
| Totals | 3.78481% | $378,481.05 |

10. Exhibit A to the Loan Agreement is amended and restated in the form of Revised Exhibit A attached hereto.

11. Exhibit B to the Loan Agreement is amended and restated in the form of Revised Exhibit B attached hereto.

12. Exhibit D to the Loan Agreement is amended and restated in the form of Revised Exhibit D attached hereto.

13. This Amendment may be signed in several counterparts. Each will be an original, but all of them together constitute the same instrument.

14. Except as specifically modified above, all other terms and conditions of the Loan Agreement and the Note remain unchanged and in full force and effect.

15. By its execution of this Amendment, the Borrower certifies to the State that the representations, warranties and certifications contained in the original Loan Agreement are true and correct as of the effective date of this Amendment and with the same effect as though made at the time of this Amendment.

IN WITNESS WHEREOF, the State and Borrower have caused this Third Amendment to Loan Agreement to be executed and delivered as of the date set forth in the first paragraph above.

**STATE OF OREGON**, acting by and through its Department of Transportation

By: _____
Daniel Porter
Budget, Economic and Debt Services Manager

Date:_____

**CITY OF DUNDEE, OREGON**
Borrower

By: _____

Name: _____

Title: _____

OREGON DEPARTMENT OF JUSTICE

By: Sam Zeigler, Senior AAG

Date: November 29, 2022 via email

## Revised Exhibit A to Loan Agreement

### Project Description

Borrower: City of Dundee

ODOT will construct the Newberg-Dundee Bypass, consisting of three phases.

**The Bypass** encompasses a section of Oregon 99W that extends northeast across Yamhill County from the Oregon 99W/Oregon 18 intersection to Rex Hill east of Newberg. The Bypass corridor will be at least 330' wide, be located along the south sides of Newberg and Dundee, and be approximately 11 miles long. The eastern terminus is located east of Newberg in the Rex Hill area of Oregon 99W at mile post 20.08. The western terminus is located where Oregon 99W intersects with Oregon 18 (McDougal Corner) west of Dundee near Dayton at Oregon 18 mile post 51.84.

The Bypass includes the following proposed interchanges:

- Dayton Interchange – located at the junction of Oregon 99W and Oregon 18 and represents the western terminus of the Bypass; it replaces the existing Oregon 18/Oregon 99W intersection at McDougal Corner and the South Dundee Interchange.

- East Dundee Interchange – located between Dundee and Newberg; a new connector road will link the interchange at Oregon 99W to the Bypass.

- Oregon 219 Interchange – located in south Newberg along Oregon 219.

- East Newberg Interchange - located southwest of Rex Hill; this interchange will be the eastern terminus of the Bypass

**Phase 1 of the Bypass** will begin at a new signalized intersection on Oregon 219, traveling through south Newberg into Dundee. South of Dundee, Phase 1 will leave the eventual full Bypass alignment, proceeding west, parallel to the Dundee city limits, and cross over the Willamette and Pacific Railroad and Oregon 99W. After crossing over Oregon 99W, Phase 1 of the Bypass will loop around and connect to Oregon 99W at a new signalized intersection.

Other Phase 1 improvements include:

- Additional southbound left turn land on Oregon 99W at Springbrook Road.

- Widening Springbrook Road to three lanes (one northbound land, one southbound land, and a center left turn between Oregon 99W and Oregon 219)

Phase 2 of the Bypass includes the design and construction of a two-lane roadway section from the current connection at OR-18/OR 219 to OR-99W north of the City of Newberg. This work will include:

- OR-219 Interchange – located in south Newberg along OR-219;
- Realigning Wynooski Road to meet the intersection of OR-219 and Wilsonville Road;
- Removing the old Wynooski Road alignment;
- Widening OR-219 for an additional travel lane, sidewalk, ADA ramps, and drainage.
- Sound walls to help reduce noise levels at locations identified in the environmental impact statement and confirmed during design;
- Pedestrian connections at the public golf course in coordination with Chehalem Park and Recreation District;
- Eight bridges to cross Fernwood Road, creeks, and local roads;
- Intersection improvements at the connection with OR-99W;
- Improvements to Veritas Lane and Corral Creek Road for safety and access to OR 99W.

Phase 3 of the Bypass includes a two-lane roadway section from current connections at OR-99W south of the City of Dundee to OR-18 north of the City of Dayton. This work will include:

- Sound walls to help reduce noise levels at locations identified in the environmental impact statement and confirmed during design;
- Adding Interchange near the City of Dundee;
- Adding interchange North of Dayton near the current location of the OR-18 and OR-99W intersection.

**Revised Exhibit B to Loan Agreement**

**Approved Project Budget**

Borrower: City of Dundee

Borrower's Portion of the Costs of Project (in dollars): $560,631.85

| Sources | Original Loan | Phases 2 and 3 |
|---|---|---|
| ARPA | N/A | $32,000,000 |
| Other State and Federal Sources | N/A | To be determined |
| ODOT STIP | $223,750,968 | $419,826,530* |
| Confederated Tribes of Grand Ronde | 4,000,000 | To be determined |
| City of Dundee (OTIB Loan, includes Loan Fee) | 315,200 (original)<br>240,631.85 (refinanced) | 320,000 |
| City of McMinnville (OTIB Loan, includes Loan Fee) | 3,209,600 (original)<br>2,294,230.20 (refinanced) | 3,622,000 |
| City of Newberg (OTIB Loan, includes Loan Fee ) | 2,211,200 (original)<br>1,574,746.73 (refinanced) | 2,615,000 |
| Yamhill County (OTIB Loan, includes Loan Fee) | 10,366,640 (original)<br>7,871,681.18 (refinanced) | 11,396,000 |
| **Total** | **$243,853,608** | **$469,779,530** |
| **Uses** | | |
| Construction | $132,754,730 | $348,900,000 |
| Preliminary Engineering | 42,273,396 | 54,000,000 |
| Right of Way | 60,828,533 | 54,700,000 |
| Utility Relocation | 5,400,000 | 12,000,000 |
| Loan Fees | $160,000 | 179,530 |
| Other | 2,436,950 | |
| **Total** | **$243,853,609** | **$469,779,530** |

*This amount will be reduced by the amount of Other State and Federal Sources and Confederated Tribes of Grand Ronde, if any.

**Revised Exhibit D to Loan Agreement**

**PROMISSORY NOTE**

December_____, 2022
Dundee, Oregon

For value received, the City of Dundee (hereinafter "Borrower") unconditionally promises to pay to the State of Oregon, acting by and through its Department of Transportation (hereinafter "State"), or order, at 350 Capitol St. NE, Salem, OR 97301-3871 or such other place as the State may designate in writing, the principal sum of Five Hundred Sixty Thousand Six Hundred Thirty-one and 85/100 Dollars ($560,631.85), or so much thereof as is disbursed and not repaid (the "outstanding principal balance"), plus interest from the date hereof on the outstanding principal balance until paid. Any capitalized terms not defined in this Note shall have the meanings assigned to such terms in that certain loan agreement of even date herewith between the State and Borrower (as amended from time to time the "Loan Agreement").

The interest rate shall be Three and 23/100 Percent (3.23%) per annum. Interest shall be computed on the basis of a 360-day year, consisting of twelve (12), thirty (30) day months.

Principal and interest shall be payable at the times and in the amounts specified on the repayment schedule on Revised Exhibit A attached hereto and by this reference made a part hereof, and the outstanding principal balance of the Note, together with accrued unpaid interest, shall be due and payable on the Maturity Date. Each payment made by the Borrower hereunder shall be applied first to the State's expenses under the Loan Agreement, then to interest then due and payable on the Loan, then to the principal of the Loan unless the Loan Agreement provides otherwise.

This Note is not payable prior to its maturity except as provided for in Section 2.06 of the Loan Agreement.

This Note is given to avoid the execution by Borrower of an individual note for each advance by State to Borrower. In consideration thereof, Borrower agrees that State's record entries of transactions pursuant to this Note, shall be conclusive evidence of borrowings and payments made pursuant hereto, absent manifest error.

In the event that the Borrower receives written notification from the State that payments made pursuant to the Loan Agreement have been assigned, all payments hereunder shall be made directly to the assignee pursuant to such assignment.

If an Event of Default occurs, the outstanding balance hereunder, including principal, interest and other charges, if any, shall, at the option of the State, become immediately due

and payable. Presentment, demand, protest, and notice of dishonor, protest and nonpayment are waived by the Borrower.

To the extent permitted by the Oregon Constitution and the Oregon Tort Claims Act, the prevailing party in any dispute arising from this Note shall be entitled to recover from the other its reasonable attorney fees, costs and expenses at trial and on appeal. Reasonable attorney fees shall not exceed the rate charged to the State by its attorneys. The Borrower shall, on demand, pay to the State its reasonable expenses incurred in the collection of Loan payments.

The terms, provisions and covenants contained in this Note shall apply to, inure to the benefit of, and bind the parties hereto and their respective successors and assigns.

This Note shall be governed by and construed in accordance with the laws of the State of Oregon (without giving effect to its conflicts of law principles).

This Note is subject to the terms and conditions of the Loan Agreement. The indebtedness evidenced by this Note is secured by the collateral described in the Loan Agreement.

City of Dundee

By: _____

Name & Title (print): _____

NOTICE TO BORROWER

DO NOT SIGN THIS NOTE BEFORE YOU READ IT.

**Revised Exhibit A to Promissory Note**

**Repayment Schedule**

Borrower: City of Dundee

| **Payment Due Date:** | **Amount Due:** |
|---|---|
| July 01, 2023 and the first day of each July thereafter | Installment payment of principal and interest of $20,373 |
| Maturity Date (July1, 2069) | The remaining principal and interest due on the Loan |

**Revised Exhibit F to Loan Agreement**

**Payment Requisition**

TO: Oregon Transportation Infrastructure Bank
Oregon Department of Transportation
Financial Services, MS – 21
355 Capitol Street, NE
Salem, Oregon 97301-3871

RE: Oregon Transportation Infrastructure Fund, Loan Number OTIF-0046

On behalf of the City of Dundee, I hereby request that the Oregon Transportation Infrastructure Fund (OTIF) disburse to the Oregon Department of Transportation the following amount from the account established in the OTIF for this Loan:

[Insert Amount]

The foregoing disbursement is for Costs of the Project as such term is defined in, and which are permitted under, the Loan Agreement dated December___, 2022, between the State of Oregon acting by and through its Department of Transportation and the City of Dundee. I have attached all necessary documentation as required by Section 4.02(b)(vi) of the Loan Agreement. No Event of Default has occurred or is continuing under the Loan Agreement.

DATED this _____ day of _____, _____.

CITY OF DUNDEE

By: _____
Authorized Officer
Name & Title (print): _____
Attachments