Low-power data transceiver pair – save 30%

ELECTRONICS WORLD

INCORPORATING WIRELESS WORLD

Austria Asch. 66.00
Denmark DKr. 67.00
Germany DM 18.00
Greece Dra.1100.00
Holland Dfl. 11.75
Italy L. 8800.00
Malta Lm. 1.55
IR £3.30
Singapore S$7.50
Spain Pts. 850
USA $5.95

A REED BUSINESS PUBLICATION
SOR DISTRIBUTION

FEBRUARY 1998 £2.35

Linsley-Hood THD meter

Direct conversion receiver

Temperature sensors

Noise – in all its colours

Understand capacitors

Building management

Ten circuit ideas

02>
9 770959 833035

NEW

TINA Plus

The circuit design and analysis package which gives you a great deal more

■ More Power ■ More Functionality ■ More Value for Money

Special introductory offer, just

£199*

We challenge you to find a better circuit design and analysis package anywhere

*Price excludes V.A.T

- Analogue, digital and mixed mode simulation
- Powerful analysis tools include AC, DC, transient, pole zero, Fourier (series & spectrum), noise, digital step-by-step and digital timing
- Monte Carlo and worst case analysis
- Enhanced symbolic analysis (providing closed form formulas)
- Temperature and parameter stepping, sweeping and optimisation
- Programmable input to circuits
- Component library contains 5,000+ components (user extendible)
- New models, including analogue control elements
- Interactive components
- Faster algorithms for mixed-mode and large circuits
- Improved schematic entry
- Export to popular PCB packages
- Export/import in Spice format
- Display results in sophisticated diagrams or on a range of Analogue and Digital Virtual Instruments, including function generator, multimeter, oscilloscope, frequency analyser and logic analyser
- Comprehensive DTP functions

TANDEM TECHNOLOGY

Try TINA *plus* for yourself. For free demo disk, contact:
Tandem Technology Limited Breadbare Barns, Clay Lane, Chichester, West Sussex, PO18 8DJ
Telephone: 01243 576121 Fax: 01243 576119
E-mail: 101626.3234@compuserve.com Visit our website: www.tina.com

CIRCLE NO. 101 ON REPLY CARD

Contents

Cover – Hashim Akib

104 MEASURE THD TO 0.001%
Renowned engineer John Linsley Hood shares his latest design – a high performance audio distortion meter.

98 LOUDSPEAKER UNDERCURRENTS
Douglas Self presents an analysis of the complex amplifier loading provided by a moving-coil loudspeaker.

102 NIGHT RIDING
Motor cars with head-up windscreen displays that augment what you see at night? Lana Josifovska reports.

110 HANDS-ON INTERNET
Processor bugs, interactive application notes and Spice add-ons are among Cyril Bateman's Internet topics this month.

122 BUILDING MANAGEMENT USING LOW-POWER RADIO
Brian Back outlines how to design a building management system using wireless transceivers in conjunction with a PIC.

126 UNDERSTANDING CAPACITORS II
Mica capacitors and criteria for components used in conjunction with mains voltages are discussed by Cyril Bateman.

133 SPEAKERS' CORNER
How do loudspeaker makers produce drivers that have next to no external magnetic field? John Watkinson explains.

136 ROAD READING
Is it possible to detect a 2mm crack in the road surface while driving at 50mile/h? Yes it is. Roy Rubenstein explains how.

138 MULTI-BAND DIRECT-CONVERSION RECEIVER
Hannes Coetzee applies novel, low-cost components to produce a unique receiver design for the hf amateur bands.

146 NOISE
Ian Hickman takes a detailed look at various forms of noise.

165 SENSING TEMPERATURE
In this second article, Richard Lines discusses which transducer is best for which job, and covers interfacing issues.

Regulars

91 COMMENT
Thanks for the memory – but...

93 NEWS
Mobile phones and recycling, Eurofighter 2000 problems, UK r&d, GPS locates to 10cm, biometric verification, UK lcd breakthrough.

155 LETTERS
Technology at any price? Room for resonance, Tuning iron, Weaned on Wien

159 NEW PRODUCTS
Pick of the month:
classified for your convenience.

Reader offer

Special offer – 30% exclusive EW reader discount on a synthesised transceiver pair with multiple channels and a 5km maximum range – see page 122.

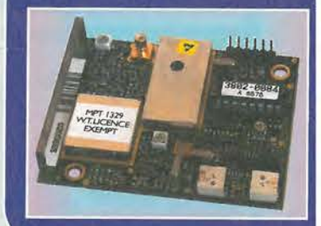

Huge revenues are in store for UK defence electronics industries following a German order for 180 Eurofighters. This – and more news – on page 93.

Imagine detecting a 2mm crack in the road surface while travelling at 50mile/h. Roy Rubenstein explains how its possible on page 136.

114 CIRCUIT IDEAS
- Comb generator
- Anti-theft for cars
- Electrostimulator
- 90° phase shifter
- 1:1 m:s oscillator
- Touch switch
- IR transmit/receive
- Low voltage flasher
- 75W inverter

MARCH ISSUE
ON SALE 5 FEBRUARY

PROTEUS

Schematic Capture

NEW Version IV

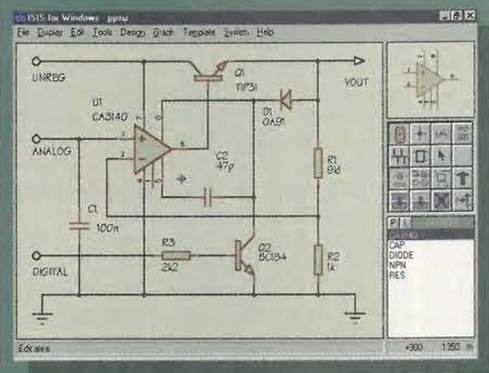

- Produces attractive schematics like you see in the magazines.
- Netlist, Parts List & ERC reports.
- Hierarchical Design.
- Full support for buses including bus pins.
- Extensive component/model libraries.
- Advanced Property Management.
- Seamless integration with simulation and PCB design.

Simulation

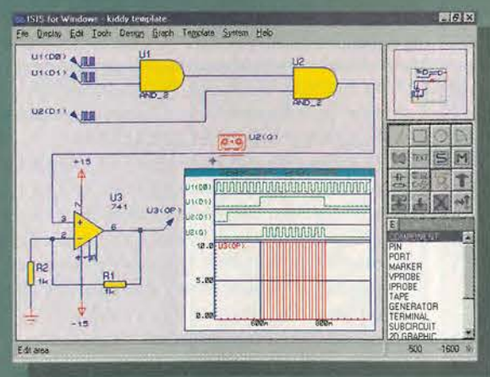

- Non-Linear & Linear Analogue Simulation.
- Event driven Digital Simulation with modelling language.
- Partitioned simulation of large designs with multiple analogue & digital sections.
- Graphs displayed directly on the schematic.

The IV th Generation

New Features

Component Auto-Placer
Pinswap/Gateswap Optimizer
Background Regeneration of Power Planes
Enhanced Autorouting with Tidy Pass
Full Control of Schematic Appearance
Extensive New Component Libraries

Available in 5 levels - prices from £295 to £1875 + VAT.
Call now for further information & upgrade prices.

PCB Design

NEW Version IV

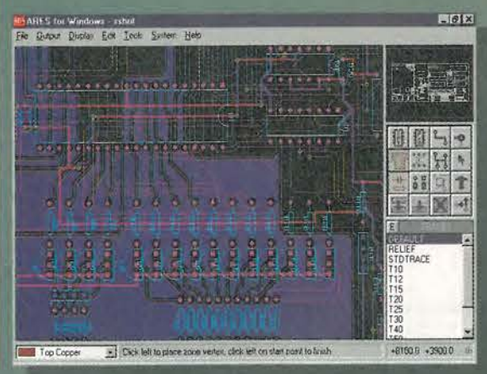

- Automatic Component Placement.
- Rip-Up & Retry Autorouter with tidy pass.
- Pinswap/Gateswap Optimizer & Backannotation.
- 32 bit high resolution database.
- Full DRC and Connectivity Checking.
- Shape based gridless power planes.
- Gerber and DXF Import capability.

"PROTEUS is particularly good with its rip-up-and-retry autorouter"
EWW January 1997

Labcenter Electronics

Write, phone or fax for your free demo disk, or ask about our full evaluation kit.
Tel: 01756 753440. Fax: 01756 752857. EMAIL: info@labcenter.co.uk
53-55 Main St, Grassington. BD23 5AA. WWW: http://www.labcenter.co.uk

Fully interactive demo versions available for download from our WWW site.
Call for educational, multi-user and dealer pricing - new dealers always wanted.
Prices exclude VAT and delivery. All manufacturer's trademarks acknowledged.

CIRCLE NO. 107 ON REPLY CARD

UP DATE

Mobile phone makers see recycling threat

The threat of the EU imposing a tax for the recycling of mobile phones is spurring the industry to come up with its own recycling schemes.

To prevent the tax from slowing the adoption of mobile phones, handset makers, mobile phone operators and retailers are joining forces to develop their own inexpensive schemes for recycling. The objective is to enable each store that issues a mobile phone to take it back for recycling. The majority of funding for the scheme will come from the industry itself, but some cost may trickle down to the user.

However, in order to promote the scheme the industry needs UK government support. "We need the government to help us raise awareness. We are a talking to the government and they sound interested but cautious," said Bill McCartney of ECTEL – The European Telecommunications and Professional Electronics Industry – and Cellular Phones Takeback Group's chairman.

A six month trial in the UK and Sweden, dubbed Takeback and launched by Motorola, Nokia, Ericsson, Panasonic, Alcatel and BT Mobile, has found that only four per cent of handsets were returned for recycling.

Its other findings include the typical lifespan of handsets are between two and four years, and that the attitude regarding recycling varies according to the country.

"In Britain, mobile phones are treated as special waste so special collection schemes have to be set up. In Sweden that is not the case, making it 60 per cent more efficient," said McCartney.

While obstacles for the recycling scheme remain, the industry is confident that the objective of economically recycling mobile phones through local suppliers is achievable. "If we keep this thing running we'll build it to a successful scheme," added McCartney.

German Eurofighter order a boost for UK

Huge revenues will be earned by UK defence electronics companies after Germany spurred on the Eurofighter programme by approving the order of 180 aircraft.

The decision means Europe can now go ahead with producing the plane, creating and securing thousands of jobs.

British Aerospace is the prime contractor for this country's contribution to the £42bn project. The company is distributing £15m worth of work among UK firms, including GEC-Marconi and Smiths Industries.

"In the UK, during the current development phase, there are about 5600 people employed on Eurofighter work," said a BAe spokesman. "When the project reaches peak production there will be between 14000 and 16000."

GEC-Marconi is producing 24 different systems for Eurofighter, including its radar, head-up display, flight controls and electronic warfare systems. Andrew Clifton, industry analyst at investment bank Merrill Lynch, explained that initial pre-production would be worth £200m to GEC. "The total contract will be worth an additional £1.1bn," he said.

Smiths Industries has developed 17 systems for Eurofighter, such as its head-down displays, as well as its engine and fuel management systems. The company employs 770 people working on the project at its Cheltenham-based Defence Systems Division.

The plane will enter service in European airforces in 2002. Europe needs the plane to match the threat from countries possessing Russian-made fighters, like the current Mig-29 and the Sukhoi Su-27.

Telecom industry warned on 2000 bug

British Telecom boss Sir Peter Bonfield has told the UK's telecoms industry that it needs to get its act together and start addressing the Millennium date change problem. Next year may be too late.

Bonfield, speaking at the TMA30 conference, warned that companies that were not into heavy testing of their systems by mid-1998 were "going to run into serious problems".

"It is vital that we get this one right," Bonfield told representatives from across the industry. "We think the Millennium Bug is extremely important and that it should be discussed at board level in companies across the land."

BT, said Bonfield, has had a Year 2000 programme in place for some time to ensure that it is ready in time. "Our biggest risk is in interfacing into areas where we don't have control," he said, pointing out that BT is already working with customers and suppliers to address the issue.

Meanwhile, a report by business telecoms supplier Mitel warns that while many UK businesses are sorting out the problem in their computer systems, they "remain oblivious to the fact that their telecommunications systems will produce results just as frightening as those in the IT world".

Mitel says in its report that although most PBXs will not crash, the reliance on computer telephony applications connected to PBXs will mean that the majority of companies' phone systems will be seriously affected unless they are made compliant.

UK r&d investment "lacks urgency"

The government's commitment to promoting investment in high-tech firms has been called into question by Anthony Parish, director general of the Federation of the Electronics Industry (FEI).

Parish welcomes the initiative from the DTI and the Treasury to set up a working party to find ways of improving the UK's record of R&D investment. But he is worried about the government's lack of urgency in tackling the problem.

He points out that the problem was highlighted in a Bank of England report released over a year ago. "It has taken [the government] over a year to set this up," he said. "This is pathetic to say the least."

The fifteen members on the government's high-tech investment working party, which includes Oxford Instruments chairman Peter Williams, are themselves "very good" according to Parish. "I admire lots of people on that committee, but I think they should get a move on," he said.

The government announced its working party last week, which is to examine the finance of high-tech companies, and barriers preventing their growth. The group will meet over the next six months, and will release a report at the end of May. An interim report is expected in January.

The working group's role is still unclear, however. Geoff Lindey, head of JP Morgan's institutional investment operation and a key member of the group, was unable to expand on the group's role.

Building society first with biometric verification

Nationwide, the UK's largest building society, is the first UK financial organisation to introduce biometric verification at automatic teller machines (ATMs). The building society is to start a six-month pilot scheme in its headquarters-town of Swindon that will check users' identity with an eye-scan. The trial is aimed at assessing the public attitude towards this type of technology. "We were the first to introduce Internet banking and the first to install interactive touch-screen booths in a number of branches. We'll be the first in the UK to do this as well," said a Nationwide spokesman. "This proves that we are technologically minded."

The ATMs will be supplied by NCR and the biometric equipment by US-firm Sensar. Once a user's iris has been scanned, typically taking a few seconds, the information is digitised and stored in a central database. This is then accessed for verification each time a user accesses their account via an ATM.

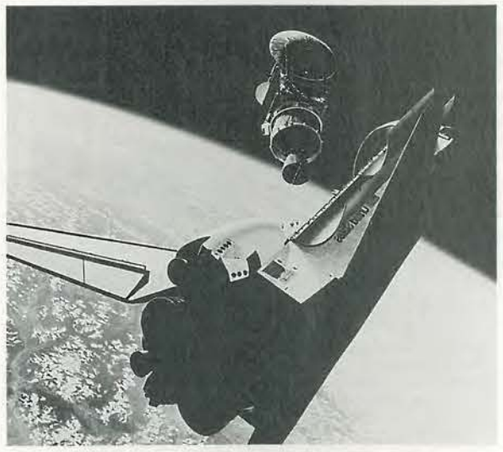

New GPS chips can locate down to 10cm – but more importantly, the technology's there to pin-point down to 1mm.

New GPS IC locates to 10cm

Within three months IMEC, the International Microelectronics Centre at the University of Leuven in Belgium, will commercialise a global positioning system (GPS) chip which can track a location to an accuracy of 10cm.

The chip uses either the American satellite constellation or the Russian Glonass constellation to establish a position. It also conforms to the European global navigation satellite system standard for air traffic control. IMEC intends to be sampling the single-chip device early next year. "We tape-out in December and it will be in fabbed February," said IMEC's director for valorisation, Johan van Helleputte.

IMEC is already working on even more accurate versions of the chip. "Our target is to get down to one millimetre," said van Helleputten "we could do that now except that we need more work on the software processing side."

IMEC has also developed a process for putting the connections directly onto the back of silicon dies – so avoiding the need for packaging. The process has been developed with Siemens. "Siemens has a strategic plan to launch that," said van Helleputte.

Dedicated fingerprint detection ICs

Fingerprint identification ICs are enabling a new class of computer security and human identification systems.

At the Comdex show late last year, several companies introduced low priced fingerprint ID systems that interface to pcs. Digital Persona showed its $99 U.are.UTM – a mouse-sized fingerprint scanner to be introduced early next year.

"Your fingerprint is unique," said Fabio Righi, CEO of Digital Persona. "Using our recognition system is much easier than remembering and typing in a password."

I/O Software demonstrated Sony's Fingerprint Identification Unit (FIU), Who?Vision showed a prototype of its TactileSense fingerprint ID systems designed to be integrated into pc keyboards, while Key Tronic showed its secure keyboard finger image scanner.

Many of the fingerprint ID systems use Intel's universal serial bus (USB) for easy connection to a pc. "USB is helping to make fingerprint scanning possible since pcs are now powerful enough to handle the image processing tasks necessary," said Intel's Steve Whalley.

Fingerprint image capture ICs are a key driver for the applications. Lucent Technologies' spin-off Veridicom has developed a chip that it says will enable low priced fingerprint ID systems.

The Veridicom chip is about one half inch square and has an array of 300 by 300 capacitive sensors to capture a bit mapped fingerprint image. The chip has a surface100 times stronger than glass, making it extremely durable. Who?Vision has developed a durable polymer based fingerprint recording device.

Other companies making fingerprint ICs include Harris and SGS-Thomson Microelectronics.

ADVERTISEMENT

UK foothold in LCD panel market?

A pioneer of liquid crystal material technology has developed a novel paper-thin display which could give the UK a foothold in the flat panel display market.

Professor Damien McDonnell, liquid-crystal display researcher at the Defence Evaluation and Research Agency (DERA) in Malvern, has developed an display technology called zenithal bistable device (ZBD) which is thin, flexible and electrically rewritable. "It doesn't need power to maintain the image, and you can roll it up and stamp on it without erasing it," said McDonnell.

ZBD is not based on the usual bistable ferroelectric technology but uses a nematic crystal. "Bistability comes from the way the crystals are anchored," said McDonnell. "This can be shifted using a small electric fields and stays where it is left. Transmissive and reflective displays, with contrast of 100:1, can be made. We have made one with 4-bits of grey scale and I think seven or 8-bits are possible."

If the DERA-developed 'electronic paper' makes it out of the laboratory, could the UK be the place which produces it? "I don't see why not," said McDonnell. "You can make anything anywhere now. What you need is the investment and the expertise."

McDonnell stresses that making lcds is only part of the problem in establishing an industry. "The major one is that there isn't any room in the lcd market." he said. His belief is that the advent of electronic paper will open up a whole new range of applications. "Something that is very thin, flexible, can be written and rewritten, and used without power could be this product," he said.

Japanese foresight and investment in the seventies gave them the huge lead that they have now in lcd manufacturing. Would they do the same again with electronic paper? "It's not a foregone conclusion," McDonnell said

Better and cheaper than micro ball-grid array

Siemens and IMEC are discussing how best to commercialise their jointly developed chip-scale packaging called PSGA (Plastic Studded Grid Array).

The packaging is said to be more than 20 per cent cheaper and can achieve a finer connection pitch than micro ball grid arrays. It also has no difference in thermal coefficient between the connections and the substrate – a problem that can affect BGAs.

Road charge schemes announced

The opportunities for the use of electronics in vehicles received a further boost following the government's commitment to charge road users under a variety of conditions.

At the ITS Focus conference for Transport Telematics held in London, Baroness Hayman, the minister for transport, confirmed that the government will introduce charging for road congestion, air quality improvement, non-residential parking and motorways in its white paper in the spring.

Although the private sector is uninterested in participating financially, the government is determined to find ways of charging the road user to raise money.

The plan is to equip each vehicle with an electronic in-vehicle unit that will communicate with roadside equipment such as variable message signs and electronic tolling stations. Leicester and Bristol are the first UK councils undertaking an air pollution trial, where cars are charged when entering a zone with poor air quality.

"Leicester is hoping to persuade the government to re-allocate the money that goes in the building of new roads to the support of this system," said David Crawford, media advisor to ITSFocus.

Transistor three atoms across

A tiny transistor, with a gate oxide just three atoms thick, has been developed by Bell Laboratories, the r&d arm of Lucent Technologies.

With a channel length of 60nm, and a three atom, or 1.2nm thick gate oxide layer, the mos transistor is not the smallest ever prototyped, but the designers claim it is the smallest that is manufacturable.

"No one has built a transistor this small with all of the components scaled to deliver the kind of performance needed for a practical device," said Mark Pinto, chief technical officer of Lucent Technologies Microelectronics.

Bell Labs has used electron beam rather than conventional optical lithography to print the silicon surface with the transistor's features.

The result is a device that flows 1.8mA per micron – the highest yet reported for a MOS transistor. And it runs off power supplies as low as 0.6V.

Compared with today's 0.25µm devices, the 60nm transistors are five times faster and use up to 160 times less power.

Single-chip MPEG-4

A copper interconnect process, ferroelectric memory and a single-chip IC for MPEG-4 are just some of the projects involving IMEC and its industrial partners.

IMEC – the International Microelectronics Centre at the University of Leuven, Belgium – expects to have a complete copper tracking process ready for transfer to industrial partners within eighteen months. After six months of work, IMEC has completed some modules of the full process and is working on finding out how one module affects another. IMEC is negotiating terms with seven semiconductor companies for the process.

Ferroelectric memory is being pursued by IMEC as a technology to be embedded into CMOS chips. The problems are still mainly materials problems – IMEC is focusing on PZT – and the contamination of one material by another. This year, IMEC started making wafers on its 0.5µm ferro process and next year it hopes to have a 0.25µm one, with an integrated c-mos/Ferro process in operation by 2000. Ten companies are involved with IMEC in negotiations on the project.

Another materials project is a sub-0.1µm process it is engaged in with Siemens. Another five companies are seeking to get involved.

Other projects currently just getting off the ground are single ICs for real-time, object-oriented MPEG-4 and a single-chip solution for 100Mbit/s wireless LAN using the CDMA radio standard. A multi-level cell flash memory process – storing two bits per memory cell – is under development in conjunction with Siemens and Alcatel-Mietec.

new excel100

POWER FACTOR CORRECTED PFC

The new off the shelf power supply from Weir Lambda

- 4 Safety Extra Low Voltage (SELV) outputs
- 100 watt convection-cooled rating
- Fits 1U rack
- Input and Output connectors for rapid installation
- Harmonic correction to EN61000-3-2
- EMC performance to EN55022
- Auto-ranging input for worldwide operation
- Standard output voltage variants available from stock
- Non-PFC version available for cost sensitive applications
- Customised versions available for volume OEM users

WEIR LAMBDA

Weir Lambda, Durban Road, Bognor Regis, West Sussex PO22 9RW
Tel 01243 865991 Fax 01243 841628 http://www.weirlambda.com

Contact us now on 01243 865991

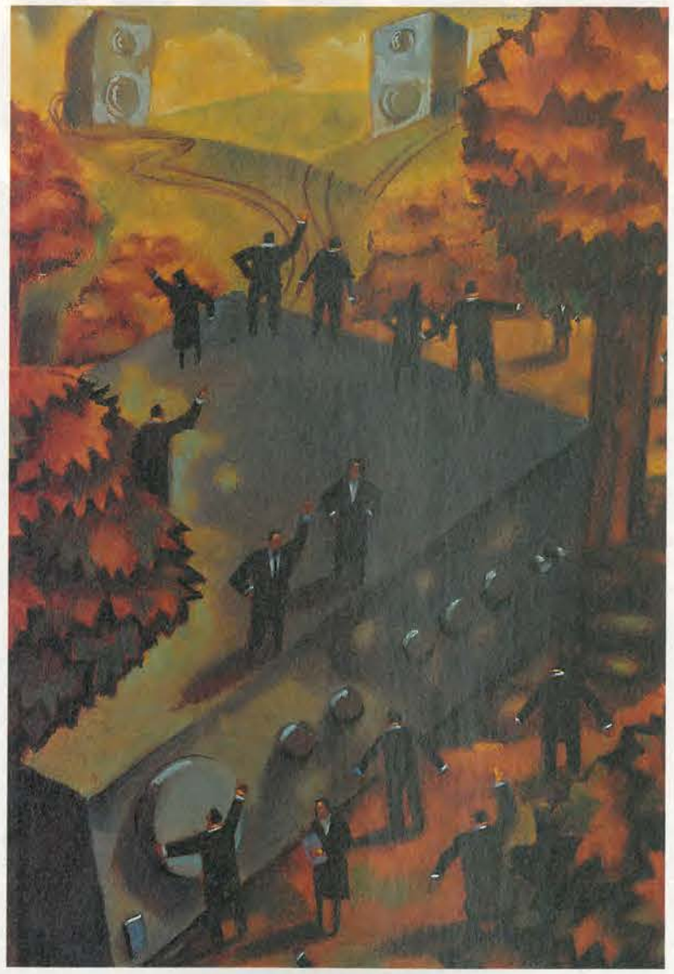

In the sometimes uneasy relationship between amplifiers and the loudspeakers they drive, a prime source of difficulty is the gulf of difference between a resistive load and the complex loading presented by a real speaker. An understanding of this is vital when rating the output semiconductors, argues Douglas Self.

Loudspeaker undercurrents

It is easy to show that the voltage/current phase shifts in reactive loudspeaker loads increase the peak power dissipation in a cycle, using sine wave test signals of varying frequency.[1] The effect of this on device selection in output stages is complicated by the inability to treat power ratings as average power, for as far as safe-operating areas are concerned, low audio frequencies count as dc.

But sinewave studies do not give insight into what can happen with arbitrary waveforms. When discussing amplifier current capability and loudspeaker loading, it is often said that it is possible to synthesise special waveforms that provoke a loudspeaker into drawing a greater current than would at first appear to be possible. This is usually stated without further explanation. Since I too have become guilty of this,[1] it seemed time to make a quick investigation into just how such waveforms are constructed.

The possibility of unexpectedly big currents was raised by Otala[2], and expanded on later.[3] But these information sources are not available to everybody. The effect was briefly demonstrated in *EW* by Cordell[4], but this was a long time ago.

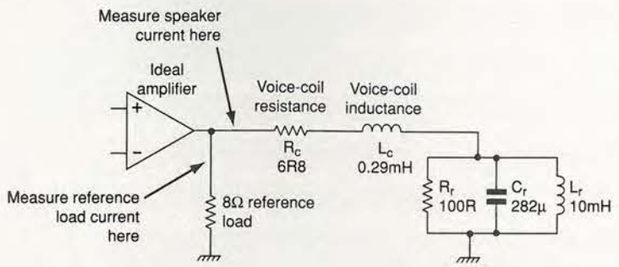

Fig. 1. Equivalent circuit of single-unit speaker. Although the nominal impedance is 8Ω, the coil resistance R_c is only 6.8Ω. This is based on a successful commercial 10in bass unit. The LCR network on the right simulates the cone mass/suspension-compliance resonance.

Speaker model

Figure 1 is the familiar electrical analogue of a single speaker unit. Component R_c is the resistance and L_c the inductance of the voice coil. In series, L_r and C_r represent the resonance of cone mass and suspension compliance, while R_r controls the damping. These three components model the impedance characteristics of the real electromechanical resonance.

Voice-coil inductance is 0.29mH, and coil resistance 6.8Ω. These figures are typical for a 10in bass unit of 8Ω nominal impedance. Measurements on this load will never show an impedance below 6.8Ω at any frequency. This makes it easy to assume that the current demands can never exceed those of a 6.8Ω resistance. This is not true.

To get unexpectedly high currents moving, the secret is to make use of the energy storage in the circuit reactances, by applying an asymmetrical waveform with transitions carefully matched to the speaker resonance.

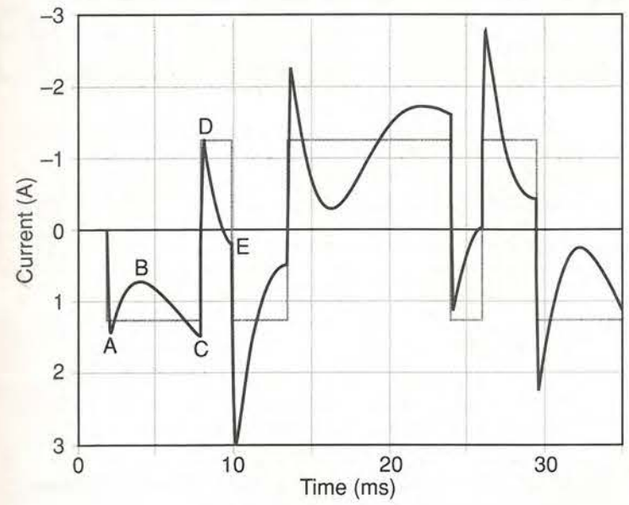

Fig. 2. Asymmetrical waveforms to generate enhanced speaker currents. The sequence ABCDE generates a negative current spike; to the right, the inverse sequence produces a positive spike. The rectangular waveform is the current through the 8Ω reference load.

Simulating the effects

Figure 2 shows PSpice simulation of the currents drawn by the circuit of Fig. 1. The rectangular waveform is the current in a reference 8Ω resistance driven with the same waveform. A ±10V output limit is used here for simplicity but this will in practice be higher, a little below the rail voltages.

At the start of the waveform at A, current flows freely into C_r but then reduces to B as the capacitance charges. Current is slowly building up in L_r, so the total current drawn increases again to C. A positive transition to the opposite output voltage then takes us to point D, which is not the same as A because energy has been stored in L_r during the long negative period.

A carefully-timed transition is made at E, at the lowest point in this part of the curve. The current change is the same amplitude as at D, but since it starts off from a point where the current is already negative, the final peak goes much lower to 2.96A, 2.4 times that for the 8Ω case. I call this the current timing factor, or ctf.

And with multiple speakers?

Otala has shown that the use of multi-way loudspeakers, and more complex electrical models, allows many more degrees of freedom in maximising the peak current, and gives a worst case current timing factor of 6.6 times.[3]

Taking an amplifier designed to give 50W into 8Ω, the peak current into an 8Ω resistance is 3.53A; amplifiers are usually designed to drive 4Ω or lower to allow for impedance dips and this doubles the peak current to 7.1A. In reference 3, Otala implies that the peak capability should be at least 23A, but this need only be delivered for less than a millisecond.

The vital features of the provocative waveform are the fast transitions and their asymmetrical timing, the latter varying with speaker parameters. The waveform in **Fig. 2** uses ramped transitions lasting 10µs; as the transitions are made slower the peak currents are reduced. Nothing much changes up to 100µs, but with 500µs transitions the current timing factor is reduced from 2.4 to 2.1

Without doing an exhaustive survey, it is impossible to know how many power amplifiers can supply six times the nominal peak current required. I suspect there are not many. Is this therefore a neglected cause of real audible impairment? I think not, because:

- Music signals do not contain high-level rectangular waveforms, nor trapezoidal approximations to them. A useful step would be to statistically evaluate how often – if ever – waveforms giving significant peak current enhancement occur. As an informal test, I spent some time staring at a digital scope connected to general-purpose rock music, and saw nothing resembling the test waveform of Fig 2. Whether the asymmetrical timings were present is not easy to say; however the large-amplitude vertical edges were definitely not.

- If an amplifier does not have a huge current-peak capability, then the overload protection circuitry will hopefully operate. If this is of a non-latching type that works cleanly, the only result will be rare and very brief periods of clipping distortion when the loudspeaker encounters a particularly unlucky waveform. Such transient distortion is known to be inaudible and this may explain why the current enhancement effect has attracted relatively little attention to date. ■

References

1. Self, D, 'Speaker Impedance Matters,' *Electronics World*, Feb-Nov 1987, p. 920.
2. Otala, M, *et al*, 'Input Current Requirements of High-Quality Loudspeaker Systems.' AES preprint #1987 (D7) for 73rd Convention, March 1983.
3. Otala, M, 'Peak Current Requirement of Commercial Huttunen Loudspeaker Systems.' *JAES* June 1987, p. 455.
4. Cordell, R, 'Interface Intermodulation In Amplifiers,' *Wireless World*, Feb 1983, p. 32.

Books to buy – domestic security systems

Build or improve your own intruder alarm system

House break-ins have increased threefold in the UK over the last 20 years. Few have not been touched by the affects, even if only though the experience of family and friends who have suffered a burglary. There is a way to reduce significantly the chances of being targeted by thieves: fit an alarm. But isn't that expensive and complicated? Not if you build your own system. This book shows you how, with common sense and basic DIY skills, you can protect your home.

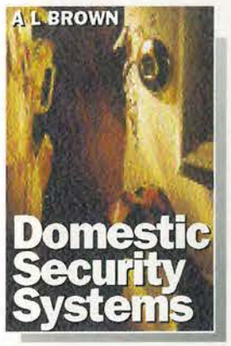

Every circuit is clearly described and illustrated, and contains components that are easy to source. Advice and guidance are based on the real experience of the author who is an alarm installer, and the designs themselves have been rigorously put to use on some of the most crime-ridden streets in the world.

To illustrate the principles , Tony Brown uses two examples of houses, one a typical semi-detached home and one an average three-bedroomed detached bungalow (for which designs would also suit an apartment). Working systems are shown in operation. Designs include all elements, including sensors, detectors, alarms, controls, lights, video and door entry systems.

*build your own security system
*practical guide to domestic security, including basic systems
*includes all elements including sensors, alarms and lights

CONTENTS: Input sensors; System control architecture; Output signalling devices; Installation; Testing and maintenance; Existing systems; Security lighting; Video camera and door entry systems; Suggested tooling; Index

ISBN 0 7506 3235 6 : 192pp : 216 x 138 mm : 70 line illustrations : Paperback :

UK £15. 00 Europe £17.00 ROW £19.00

Intruder Alarms

Specification, installation and maintenance. Gerard Honey

This book covers Intruder Alarm Systems (C+G 1851 syllabus) as well as providing the underlying knowledge required to achieve a level 2 NVQ (National Vocational Qualification) in Understanding, Specifying, Installing and Maintaining Intruder Alarms (C+G 1863, 1864 and 1865). Familiarity with the contents of this book are required before an award will be made.

Gerard Honey is an experienced installer and writer and has used that experience to produce a book that not only provides essential information in a way that is easy to follow and learn, but also makes the book a fine practical source of advice. Each chapter contains summaries, self-tests and other features designed to help the student to understand and gain knowledge easily. Intruder Alarms has been published with the help of SITO, the Security Industry Training Organisation, who design courses and organise training for security installers and professionals.

*Only course book written for syllabus for Security NVQ
*Comprehensive study of intruder alarms
*Author is a practising international security systems expert

CONTENTS: Intruder alarm systems; Circuitry; Detection devices; Power supplies; Control equipment; Signalling systems; Wiring systems; Inspection of the mains supply; Commissioning, maintenance and fault finding; Index

ISBN 0 7506 3238 0 : 192pp : 234 x 156 mm : 50 line illustrations : Paperback :

UK £27.50 Europe £29.50 ROW £37.50

Return to Jackie Lowe, Room L333, Quadrant House, The Quadrant, Sutton, Surrey, SM2 5AS

Please supply the following titles:

Qty Title or ISBN Price

_____

_____

**** All prices on these pages include delivery and package ****

Total_____

Name _____

Address _____

_____

_____

Postcode _____ Telephone _____

Method of payment *(please circle)*

Access/Mastercard/Visa/Cheque/PO

Cheques should be made payable to Reed Business Information

Credit card no_____

Card expiry date

Signed

Please allow up to 28 days for delivery

WE PUT EVERYTHING INTO OUR NEW 48-PIN UNIVERSAL PROGRAMMER

1.8V
2.7V
3.3V
5V

Approved by major manufacturers including:
AMD
Microchip
Atmel
National Semiconductor

INDUSTRY APPROVED

FEATURES

- Supports EPROMs, EEPROMs, Flash, Serial PROMs, BPROMs, PSDs, PALs, GALs, PEELs, MACH, MAX, EPLDs, and nearly 200 Microcontrollers including 87C48/51, 89C51/52, PIC, MC705/711, ST6, Z86, COP etc.
- Correct programming and verification at 1.8, 2.7, 3.3 and 5V
- No adapters required for DIL parts upto 48-pins. Universal adapters for 44-pin PLCC, 44-pin PSOP and 48-pin TSOP parts
- High speed: programmes and verifies National 27C512 in under 11 seconds
- Connects directly to standard parallel port - no PC cards needed
- Built in chiptester for 7400, 4000, DRAM, SRAM
- Lightweight and mains or battery operation
- Complete with parallel port cable, software, re-charger and documentation

THEN ADDED MORE

- FREE software device support upgrades via bulletin board and ftp
- Next day delivery
- Full range of adapters available from £65 for upto 84-pins for PLCC, SOIC, PSOP and TSOP

Only £695

PROGRAMMER MODELS AND PRICES

LV MODELS (SUPPORT 1.8V, 2.7V, 3.3V and 5V DEVICES)					
EPMASTER LV	EPROMs, EEPROMs, Flash, Serial PROMs, Serial EEPROMs 8 to 40 pins all without adapters. Built in emulator modules: 128k by 8: £395 128k by 16: £465	£295	SPEEDMASTER 1000+	EPROMs, EEPROMs, Flash, NVRAMs, Serial PROMs, Serial EEPROMs, BPROMs, GALs, 8748/51	£395
SPEEDMASTER LV	EPROMs, EEPROMs, Flash, NVRAMs, Serial PROMs, Serial EEPROMs, BPROMs, GALs, PALs, EPLDs, MACH, MAX, 8748/51.	£495	MICROMASTER 1000+	EPROMs, EEPROMs, NVRAMs, Flash, Serial, BPROMs, PALs, GALs, PEELs, MACH, MAX, PSD, nearly 200 microcontrollers without adapters.	£525
MICROMASTER LV	EPROMs, EEPROMs, NVRAMs, Flash, Serial, BPROMs, PALs, GALs, PEELs, MACH, MAX, PSD, nearly 200 microcontrollers without adapters.	£625	SPEEDMASTER GLV32	High speed EPROM/Flash 8 way Gang/Set Programmer. Supports 3.3V and 5V	£695
LV40 PORTABLE	All devices supported by Micromaster LV, *plus* completely portable with built in keypad and LCD display.	£995	COP GANG PROGRAMMER	8 way Gang programmer for National Semiconductor COP family of micros COP87xxC, COP87Lxx and COP8SAx	£1500
			SOCKET ADAPTERS	for PLCC, TSOP, SOIC, etc.	from £65

All prices exclude VAT and delivery

CE

MasterCard VISA AMERICAN EXPRESS

For a copy of our catalogue giving full details of programmers, emulators, erasers, adaptors and logic analysers, call, fax or e-mail us. You can also access our BBS or Home page. All our products are in stock now for next day delivery - call our credit card hotline now.

ICE Technology Ltd. Penistone Court, Sheffield Road, Penistone, Sheffield, UK S36 6HP
Tel: +44 (0)1226 767404 Fax: +44 (0)1226 370434 BBS: +44 (0)1226 761181 (14400, 8N1)
Web: www.icetech.com. Email: sales@icetech.com

ICE TECHNOLOGY

CIRCLE NO. 110 ON REPLY CARD

Night riding

Fighter plane head-up display technology and night vision enhancement will soon be appearing in commercial motor cars, reports Svetlana Josifovska.

So we can fly like the birds with the help of an aeroplane, but have we really ever seen in the dark? The opportunity is approaching fast and for us who are not jet-fighter pilots, the car will be one of the first vehicles to allow us this luxury.

Jaguar Cars, the Applied Mathematics and Computing Group (AMAC) at the Cranfield University, Texas Instruments and Pilkington have been designing a commercial night vision system (nvs) for vehicles. The idea for this system has been adapted from a European-funded project named Prometheus that ended two years ago. The idea was to adapt fighter airplane head-up displays and night vision features to the every day, road vehicle. Although at the moment it sounds too expensive for my little Fiesta, such features may one day be a standard part of a family saloon.

The nvs system relies heavily on dsp devices in order to cope with high quantity of information in a quickly changing environment, where visible conditions are difficult. A car can reach speeds of up to 150mile/h. The visibility may be impaired by night conditions, including dazzle from on-coming traffic, and aggravated by adverse weather such as rain or fog. And yet the images have to be delivered in real-time.

"Signal processing has an obvious role to play here as the automotive environment is very unusual, very varied," said Dr Chris Thompson, head of AMAC. "We need to deliver optimal images in real-time to the driver and this is the way to do it."

The role of AMAC is to supply advanced digital signal and image processing in order to deliver an optimised, real-time image of the road scene to the driver. The information is received from a charge-coupled device, or ccd, and near-infra-red sensors with a dsp camera mounted on the vehicle. As objects need to be clearly recognised this can be achieved most suitably through the use of dsps, which in this instance were supplied, along with the camera modules, by Texas Instruments.

The integrated dsp camera, made by the Digital Image Products group at Texas Instruments, incorporates ccd image sensors capable of capturing images not visible to the naked eye. This is then coupled with a programmable dsp and supporting mixed signal conversion circuits. The whole system is linked via a high-speed serial bus, the IEEE 1394, which supports data rates of up to 200Mbit/s.

The near infra-red-adapted ccd camera detects the reflected radiation the electrical output is converted to a digital signal before processing. Initially four C40 processors were used, but this was replaced with a single C80 from Texas Instruments. The C80, with its multiple processors on chip, seems to cope with the requirements very nicely.

"We are using novel and unique techniques, especially designed for the automotive environment. We have to cope with a wide range of lighting as some objects are very reflective, others are highly illuminated and there are those which are dim. We are developing adaptive image enhancement algorithms, able to transform the image in different lighting conditions.The C80 gives us enough processing power to adapt the image as fast as it changes," said Dr Thompson.

Once the transformation is done, the enhanced image is displayed on an head-up display that was designed especially for the car. The transformed image is superimposed over the real image on the screen, supplied by Pilkington. The image is clear, well-defined even though it is not in colour.

"Image processing is all about photo realism but not necessarily about colour," said Dr Thompson.

Additional information of the road scene such as lane markings, edges, road signs and so on can be also provided with AMAC's supplementary research.

This work is complemented by the University's long term work to recognise important features in the scene such as pedestrians, animals, road obstacles and other vehicles by using pattern recognition techniques, neural networks and motion detection algorithms. ■

The enhanced image is shown on a head-up display and overlaid on to the real image.

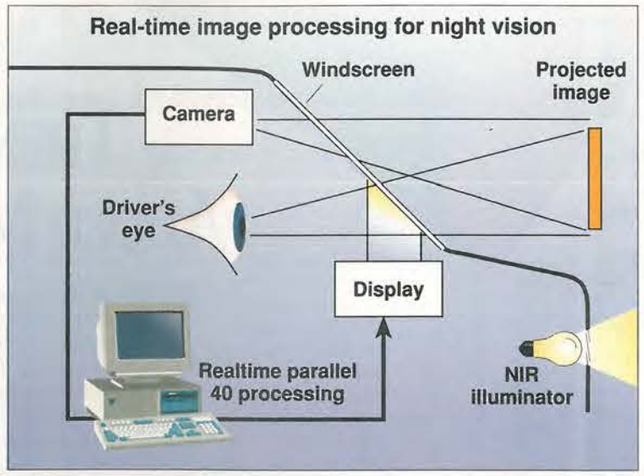

AMAC's role is to supply advanced digital signal and image processing in order to deliver an optimised, real-time image of the road scene to the driver. The information is received from a ccd, and near infra-red sensors with a dsp camera mounted on the vehicle.

Pyramid vision

AMAC is researching further enhancement of night vision by fusing near and far infra-red images. Here so-called pyramid techniques are applied, which are computationally demanding, and hence expensive.

The two infra-red wavebands bring different benefits to a night vision system. far infra-red scan, from 6µm to 1000µm, produces thermal images so it is more suited to detecting living beings. While near infra-red, in the 0.75µm to 1.5µm range, reproduces images that are similar to the visible image. With the pyramid technique the same object is re-scanned with far and near infra-red sensors. The images are reduced in scale by a factor of two each time. This creates the 'pyramid' effect of the final scanned image for the object but it also blurs it. That means bad resolution hence a bad quality image that is more difficult to interpret. So the far and near infra-red images are compared at each scanned level in order to gain the best information of the two.

"Near infra-red is very easy to interpret while far infra-red allows you to see in good weather conditions at distances of up to one kilometre. We take one near infra-red and one far infra-red picture and 'glue' them together. With the pyramid technique where we look at an image on different scales and we construct the 'pyramids'. We are averaging the pixels in a way that we don't loose any information. But we can't do this fast enough just yet so we are researching this method further," said Dr Thompson.

This project is different from Jaguar's night vision system but still involves Jaguar and PSA Peugeot Citroen. If combined with a system similar to Jaguar's nvs, it will increase the night visibility for the driver considerably. The first but slightly simpler night vision systems are likely to appear in the new millennium and only in the high-end car models to start with.

The Low Cost Controller That's Easy to Use

Features

The K-307 Module provides the features required for most embedded applications

- Analogue • 4 Channels in 1 Channel out
- Digital • 36 Digital in or out & Timers
- Serial • RS-232 or RS-485 plus I2C
- Display • LCD both text and graphics
- Keyboard • Upto 8 x 8 matrix keyboard
- Memory • > 2Mbytes available on board
- Low Power • Many modes to choose from

Development

The PC Starter Pack provides the quickest method to get your application up & running

- Operating System • Real Time Multi Tasking
- Languages • ' C ' , Modula-2 and Assembler
- Expansion • Easy to expand to a wide range of peripheral cards

Other Features

Real Time Calendar Clock, Battery Back Up, Watch Dog, Power Fail Detect, STE I/O Bus, 8051 interface, 68000 and PC Interface

Cambridge Microprocessor Systems Limited

CMS

Units 17 - 18 Zone 'D'
Chelmsford Road Ind Est
Great Dunmow Essex CM6 1XG
E-mail cms@dial.pipex.com

Phone 01 371 875 644

IT'S A PIECE OF CAKE

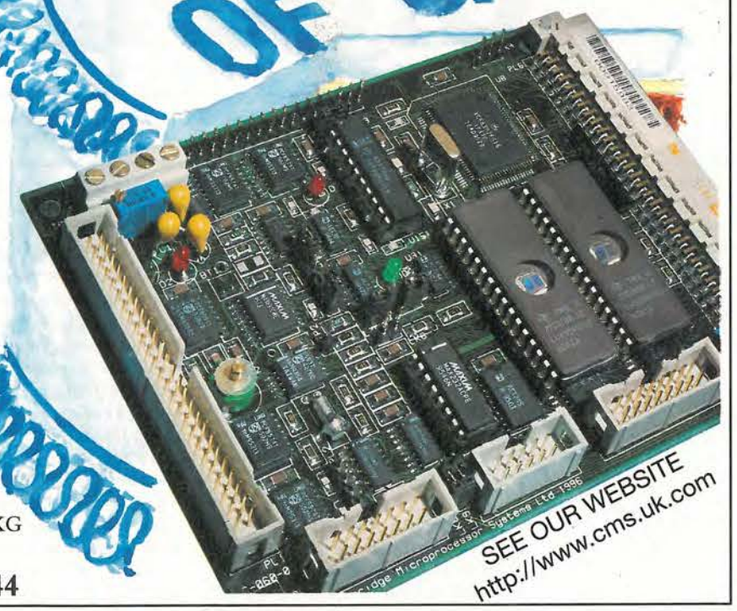

SEE OUR WEBSITE
http://www.cms.uk.com

CIRCLE NO. 111 ON REPLY CARD

Designed by John Linsley-Hood, this high-sensitivity distortion meter incorporates a general-purpose wide-band millivolt meter.

Measure thd to 0.001%

There is a considerable temptation for any electronics engineer who has an interest in the reproduction of music to try his hand at audio amplifier design.

With the wide availability of IC operational amplifiers intended for audio use – most of which have an excellent performance – the design of preamplifier circuitry is now quite a straightforward task. The designer is unlikely to end up with a unit which gives a less than acceptable performance.

Audio power amplifiers on the other hand are not so easy to design, despite the good advice offered in a growing number of books on the topic.

Why measure distortion?

In times gone by, when valve operated audio amplifiers were all that was available, designing a power amplifier was not too difficult. All you had to do was to make sure that your output transformer was of adequate quality, and stick to the general run of accepted circuit forms. If your amplifier sounded satisfactory, it was probable that all was well in respect of its electrical performance too.

This comfortable situation was rudely overthrown by the advent of the silicon junction transistor. By the early sixties, the silicon transistor could no longer be shrugged off as an unreliable and unpredictable laboratory curiosity. It offered many advantages in terms of economy and convenience in use for those who had taken the trouble to learn its structure and its operating characteristics.

Unfortunately, its use in audio applications opened up a technical minefield. A thorough analysis of the performance of any novel transistor operated circuit was essential to ensure that no obscure faults in its operation lay undisclosed.

In my case, in the late fifties, my domestic workshop comprised an elderly Cossor oscilloscope, a sine and square-wave generator, a bench power supply and a millivolt meter. Since I lacked a sensitive means of measuring waveform distortion, I decided to design one. It was subsequently described in the article 'Portable distortion monitor', *Wireless World* July 1972.

Basic distortion measurement

There are three basic ways by which the waveform distortion introduced by a given piece of audio equipment may be discovered.

The first – and most straightforward – is simply to display the input and output waveforms simultaneously on a double beam oscilloscope. Sadly, even if it is possible to superimpose the two waveforms, distortions of up to several percent in magnitude can be difficult to see, although clearly audible.

If the oscilloscope has differential inputs, it may be possible simply to subtract the input signal from an attenuated version of the output one, but, even then, bandwidth, phase and 'time-of-arrival' errors can confuse the outcome.

The second technique is spectrum analysis. Here, the magnitudes and frequencies of the components of the output signal are measured, and compared with the input signal. This procedure is much simplified if the input signal is a pure, single frequency sine-wave. Ideally, the same single frequency should be the only signal present in the output display.

Spectrum analysis really comes into its own if two or more pure sine-wave signals are introduced at the input. Here, the unwanted intermodulation products between these will be revealed, as well as the existence of any spurious harmonic products. This shows when – and how much – the output is distorted, but why and where this distortion has occurred may not be so easy to discover.

The third method is that of total harmonic distortion plus hum and noise measurement. Here, the equipment under test is fed with a single frequency, low noise signal. This frequency is removed from the system output by a simple notch filter. If this filtered residue is displayed on the oscilloscope at the same time as the output signal, it is often relatively easy to discover where this waveform distortion is occurring.

THD meter based on a Wien bridge

Of the notch circuits commonly used when I designed my first distortion meter, two commended themselves. These were the 'twin-T' and the Wien bridge, **Fig. 1**.

If C_x=C_y=C and R_x=R_y=R, then the notch frequency for both of these circuits will be,

$$f_0 = \frac{1}{2\pi CR}$$

Figure 2 is typical of the response from both of these notch circuits. Unfortunately, there is a significant amount of attenuation of the signal on either side of the notch and this would mean that harmonics at $2f_0$ and $3f_0$ would be under assessed.

In practice, negative feedback, connected around the notch network, is normally applied to give a more level frequency response. This is shown as the black curve in the drawing.

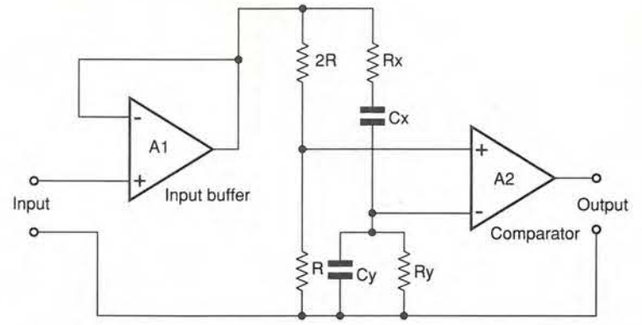

Fig. 1. Basic notch circuits, with the Wien configuration on the left, a), and the twin-T below, b).

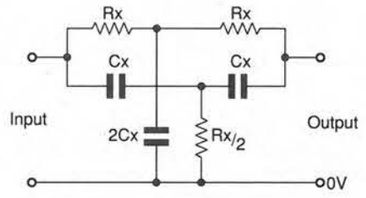

In the case of the Wien bridge notch network, it is possible to rearrange the circuit as in **Fig. 3**. Here, the signal fed to the upper limb of the network is of opposite phase and of twice the magnitude of that in the lower limb. This allows the notch to be generated by simple cancellation of the two input signals at the input to a high impedance buffer stage, A_2. Such an arrangement also allows a twin-gang air spaced tuning capacitor to be used for adjusting the frequency.

In principle, assuming a carefully laid out system, the depth of the notch at f_0 approaches infinity. In practice however, the adjustment of the notch is limited by how precisely the tuning capacitors can be adjusted. Notch depth is also affected by the accuracy of the magnitude of the input signal fed to the upper limb of the bridge and by frequency drift of the input signal source or the distortion meter.

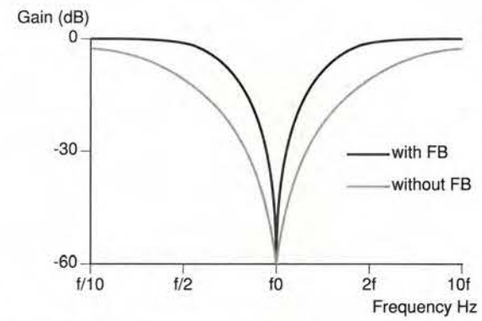

Fig. 2. Analysis shows how negative feedback can be used to sharpen the notch.

Noise problems

The final limiting factor in the circuit shown is the background noise floor of the meter itself. This floor results from the thermal noise of the input circuitry and that associated with the high resistance values required for R_x and R_y. A high resistance is needed because of the relatively low capacitance – typically about 350pF – available in twin-gang air-spaced capacitors.

Nevertheless, my prototype instrument, based on this layout, was capable of exploring distortion levels down to about 0.01%, over the range 20Hz

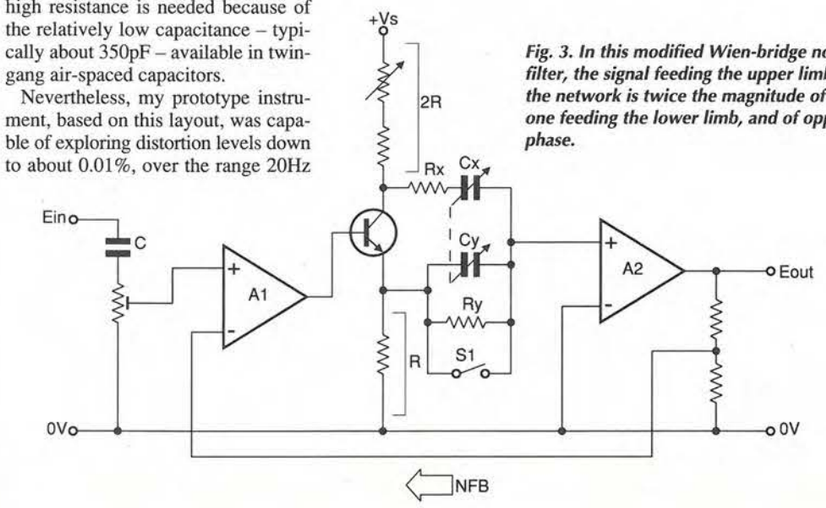

Fig. 3. In this modified Wien-bridge notch filter, the signal feeding the upper limb of the network is twice the magnitude of the one feeding the lower limb, and of opposite phase.

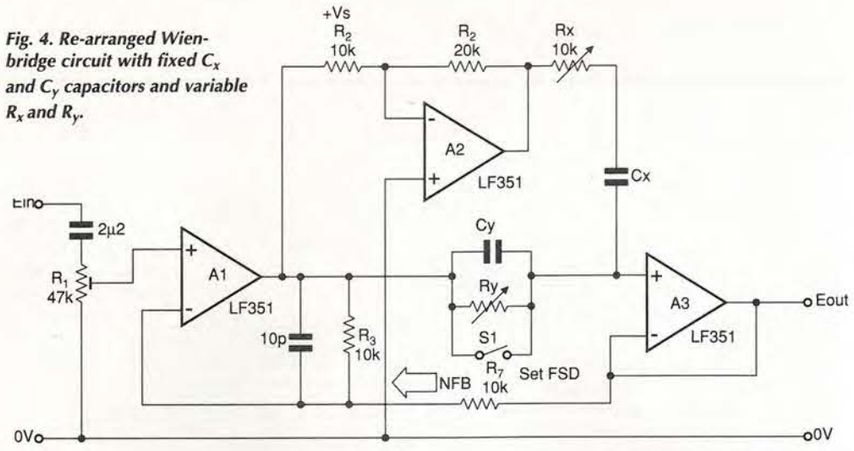

Fig. 4. Re-arranged Wien-bridge circuit with fixed C_x and C_y capacitors and variable R_x and R_y.

to 20kHz, for a 1V rms input signal.

As I mentioned earlier, I subsequently published a design for a complete instrument of this type in *Wireless World*. However, I have made other thd measuring instruments in the intervening years. These include a design based on a twin-T notch circuit, described in *WW* in July 1979, pp. 62-66. This circuit can determine thd levels as low as 0.0001%.

The original, simple Wien Bridge design has remained my preferred general purpose thd meter.

Improving the design

I was interested to read an article by Ian Hickman in *Electronics World*, January 1996, pp. 52-55. Ian proposed an improved circuit arrangement for a distortion meter which avoided or minimised the three practical difficulties inherent in the use of my original design. The first of these was the need to use negative feedback to remove the attenuation due to the notch circuit at frequencies of $2f_0$ or higher. The second was the difficulty in tuning the circuit and its sensitivity to drift in the frequency of the input signal due to the extreme sharpness of the notch. The third problem was the lessened headroom in proximity to the notch frequency. This was due to the action of the negative feedback in increasing the loop gain adjacent to this frequency to flatten the overall frequency response.

Ian's solution was to generate the notch by the use of a state-variable filter, or svf. This four op-amp filter has anti-phase high-pass and low-pass outputs that cancel at a specific frequency if summed.

As Ian showed, this process can be arranged to provide an output with a lopsided frequency response. Such a response can be used to remove the unwanted attenuation of the filter network at $2f_0$ without the need for overall negative feedback.

Both second and third problems were lessened by putting two state-variable filter notch circuits in cascade. This increases the depth of the notch. It can also provide a substantially flat-bottomed base to the notch, making tuning much less critical.

Unfortunately, the use of cascaded state-variable filters requires a lot of op-amps. There are ten in Ian's design. Each one contributes noise and distortion to the whole, as well as a requirement for some somewhat exotic components which might be difficult to come by.

As a result of these points, it seemed an interesting exercise to explore whether the solution of the problems inherent in the original circuit design could be achieved with somewhat greater economy of means.

Alternative notch filters

One of the essential features for any thd measuring instrument intended to allow the evaluation of very low levels of distortion is that the noise floor of the instrument itself should be as low as possible.

In turn, this demands that the impedance levels within the circuit

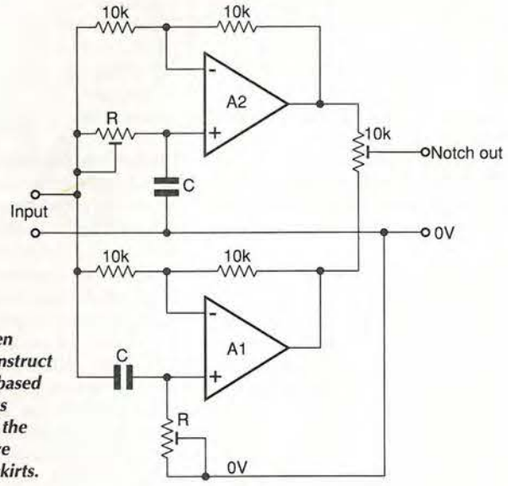

Fig. 6. It is even possible to construct a notch filter based on two all-pass networks, but the notch will have rather broad skirts.

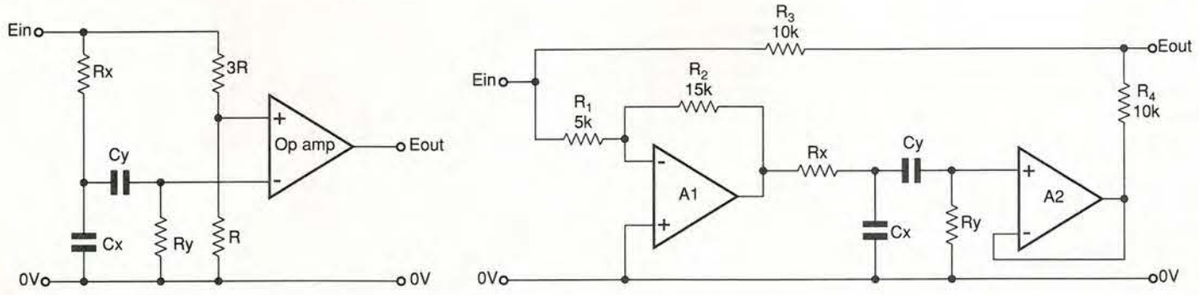

Fig. 5. Simple lag/lead circuit, a), and a notch filter derived from it, b), which performs almost identically to the Wien alternative.

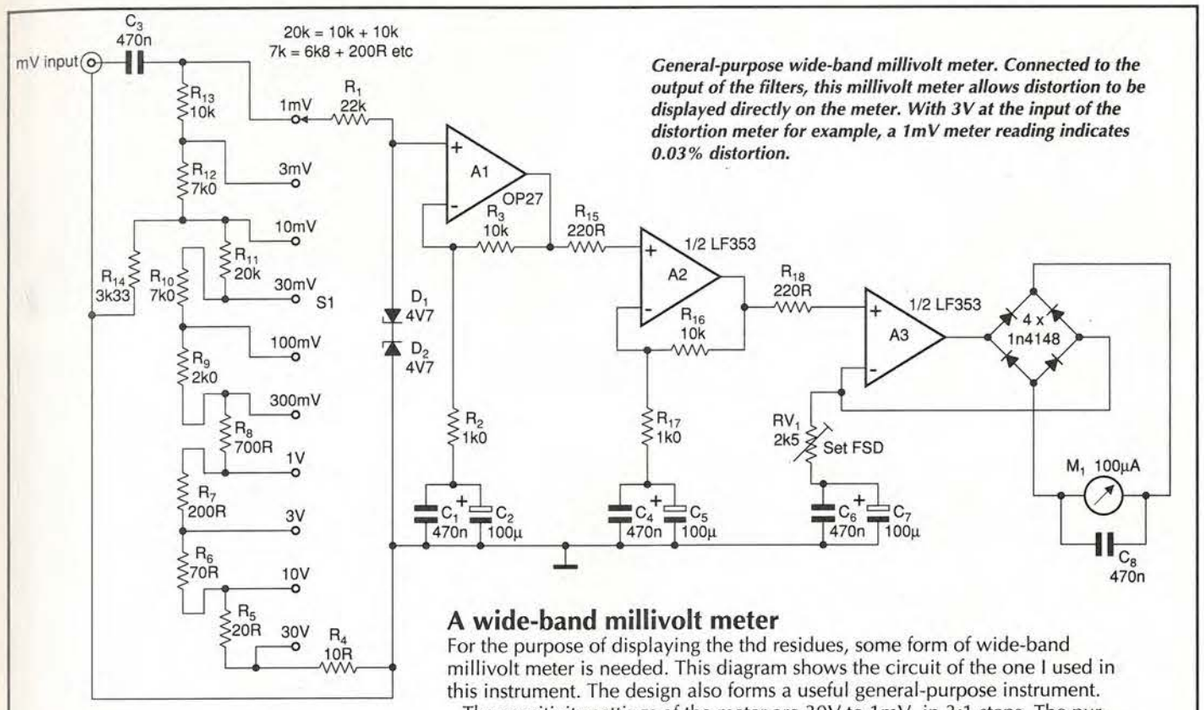

General-purpose wide-band millivolt meter. Connected to the output of the filters, this millivolt meter allows distortion to be displayed directly on the meter. With 3V at the input of the distortion meter for example, a 1mV meter reading indicates 0.03% distortion.

A wide-band millivolt meter

For the purpose of displaying the thd residues, some form of wide-band millivolt meter is needed. This diagram shows the circuit of the one I used in this instrument. The design also forms a useful general-purpose instrument.

The sensitivity settings of the meter are 30V to 1mV, in 3:1 steps. The purpose of A_6 in Fig. 7, is to allow the output to be set to 3V rms, without taking A_2 too close to output overload.

If an input voltage of 3V is applied, a 1 mV scale reading would therefore correspond to a thd value of 0.03%, and a value of 0.001% is not too difficult to read.

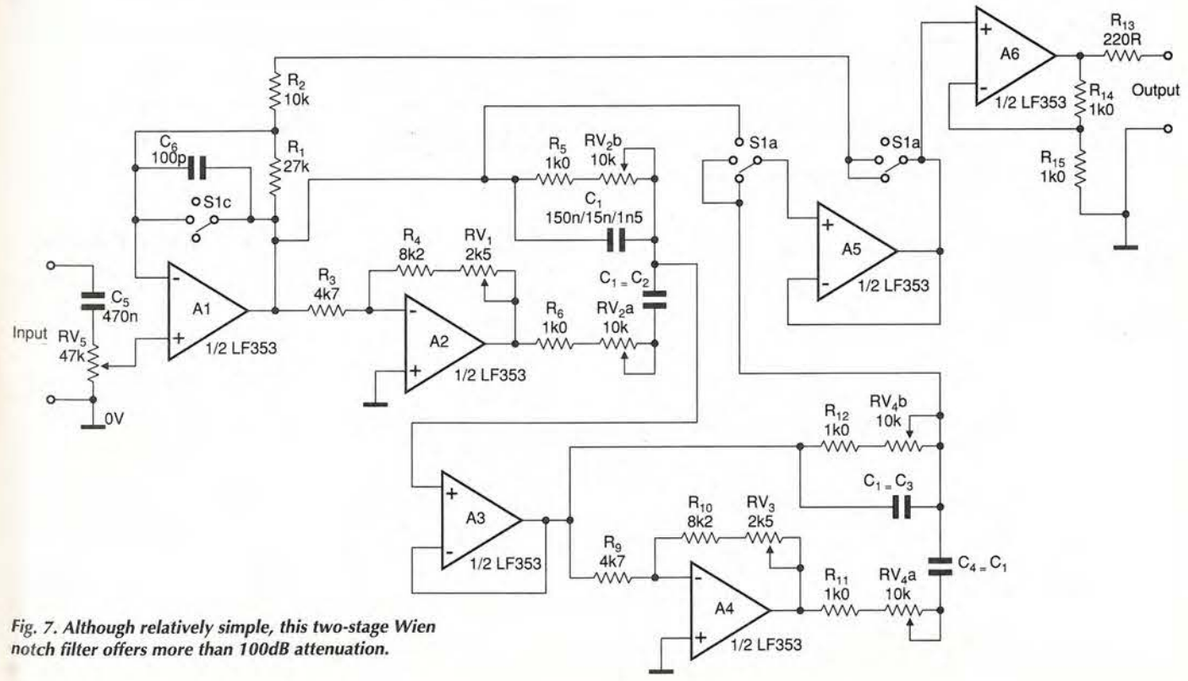

Fig. 7. Although relatively simple, this two-stage Wien notch filter offers more than 100dB attenuation.

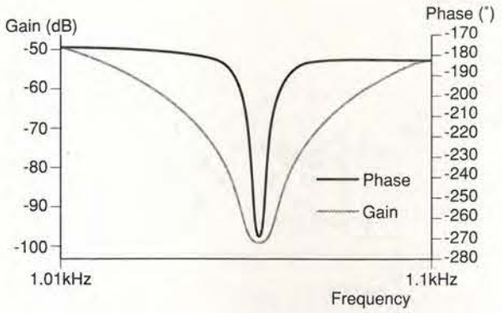

Fig. 8. Performance of the notch filter of Fig. 7. At first glance, the notch may look blunt, but note that the total frequency range shown is only 90Hz. Feedback is used, and resistor R_1 is 27kΩ.

should also be as low as practicable, provided that the resulting input impedance of the instrument does not present an embarrassingly low load impedance to the signal source it is intended to measure.

If you wanted to measure to 0.001% thd on a 1V, 1kHz signal source for example, a sensible value for the noise floor of the instrument would be –110dB, or 3.3µV. At room temperature, with a measuring bandwidth of, say, 15kHz this would postulate an effective noise resistance of 47kΩ, which seems a reasonable value for the input impedance of such an instrument.

However, even if the circuit is effectively a unity gain block, it would require that all the subsequent circuit resistances should be be a good bit less than 47kΩ. A value of 10kΩ would seem to be a reasonable target.

Clearly, the circuit shown in Fig. 3 would not meet this requirement since R_x and R_y would need to be of the order of 470kΩ to permit a notch at 1kHz with a 350pF tuning capacitor. Even though measurement bandwidth limiting filtering would help, this would be too noisy for our target thd figure to be realised.

However, the Wien bridge circuit can be rearranged as shown in outline in **Fig. 4**. In this configuration, fixed value capacitors are used for C_x and C_y, and 10kΩ variable resistors are used for R_x and R_y.

Of the other circuit possibilities, the twin-T circuit suffers from the need to adjust three resistors simultaneously, and the use of two such notch circuits in cascade to broaden the notch would make the final instrument very cumbersome to use.

Figure. 5a) shows a lag/lead circuit. A further notch layout, derived from this lag/lead circuit is shown in outline in Fig. **5b)**. Its performance is almost identical to that of the Wien network. Like the Wien network, it requires a twin-gang frequency control as well as, in practice, a gain adjustment control, R_2, for each notch stage.

The equivalent lead/lag arrangement can be made by interchanging R_x and C_x, and R_y and C_y in Fig. 5b). It is even possible to construct a notch circuit – albeit with rather broad skirts – from a pair of all-pass filter networks, as shown in **Fig. 6**.

Wien won

But none of these circuits offers the intrinsic simplicity of the Wien network, as rearranged in Fig. 4. Combining two of these, as in **Fig. 7**, allows a final, calculated performance in the region of the notch of the kind shown in **Fig. 8**.

In Fig. 7, A_3 and A_5 are unity-gain impedance converters. Amplifier A_1 is arranged to give a normal gain of 6.8dB. This value is chosen so that loop negative feedback can be used to ensure that the gain of the circuit at $2f_0$ and higher frequencies is the same as that at the frequency of the input signal, f_0, before the notch is introduced.

For ease in adjusting the notch frequency, RV_{2a} and RV_{2b}, together with RV_{4a} and RV_{4b}, are ten-turn wirewound potentiometers. My initial thought was that these could be ganged together via four dial-drive drums. These are found in amateur-radio component shops and used for slow motion dial drive, coupled to the tuning capacitors.

Experiments with my prototype instrument however showed that, if the negative feedback around the loop is switched off, by S_{1c}, it was not too difficult to adjust the potentiometers, iteratively. This was done by watching the display meter deflection progressively diminish, until the best notch was found. At this point, the negative feedback could be restored to allow the correct final thd measurement to be made.

The resolution of the ten-turn pots proved to be just good enough to allow the bottom of the notch to be found.

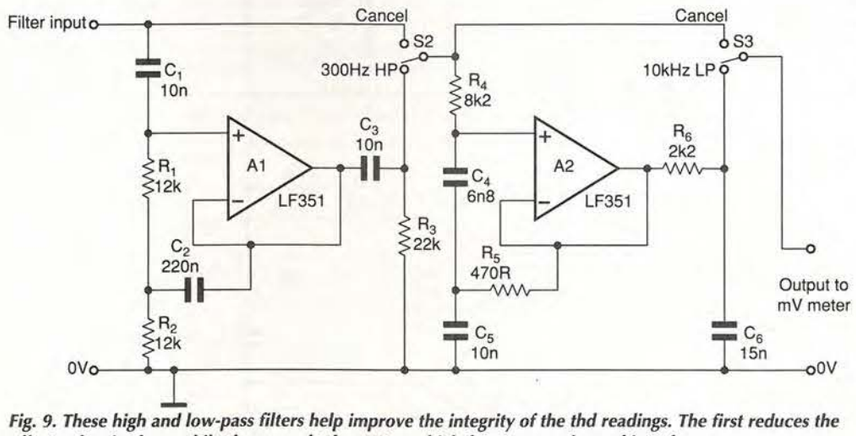

Fig. 9. These high and low-pass filters help improve the integrity of the thd readings. The first reduces the effects of mains hum while the second takes out any high-frequency noise and interference.

Output filtering and display

Displaying the output of the notch filter on an oscilloscope is useful for exploring the cause of the distortion. The wave shape of the residual can provide information about how the distortion is occurring.

Clarity of the display may be improved using a filter to exclude unwanted high-frequency noise. Similarly, it is often useful to add a high-pass filter at the output of the filter to remove mains-frequency hum pick up. Such pick up can worsen the apparent thd reading.

In **Fig. 9**, I have shown the circuit for a suitable pair of steep-cut filters: an optional high-pass one operating at 300Hz, and a low-pass one with a 10kHz turn-over frequency. ■

Marconi 2955 Radio Communications Test Set **£2250**
Marconi 2955A **£2500**
Marconi 2958 (TACS) **£2750**
Marconi 2960 (TACS + Band III) **£2750**
Marconi 2960A (TACS) **£2950**

TELNET

HEWLETT PACKARD 8920A – R/F Communications .....Test Set £4995

SCHLUMBERGER – STABILOCK 4031 – Communications.....Tester £4995

HEWLETT PACKARD 3325B – Synthesizer/Function .....Generator (1µHz to 21MHz) £2995

HEWLETT PACKARD 436A – Power Meter + Lead + Sensor (various available).....From £1000

HEWLETT PACKARD 8753A – R/F Network Analyser (300kHz to 3GHz) with 85046A 'S' paramer.....Test Set £9950

HEWLETT PACKARD 4275A – Multi-Frequency LCR Meter.....£3750

HEWLETT PACKARD 4278A – 1kHz/1MHz Capacitance Meter £3750

HEWLETT PACKARD 4279A – 1MHz C-V Meter.....£4600

HEWLETT PACKARD 4338A – Milliohmmeter (as new) £2000

ROHDE & SCHWARZ CMS54 – 1GHz Radio Comms. Service monitor...£6250

All equipment is used - with 30 days guarantee.
Carriage & VAT to be added to all goods.

Please telephone for further details on:
01203 650702 Fax: 01203 650773 Mobile: 0860 400683

Telnet, 8 Cavans Way, Binlay Industrial Estate, Coventry CV3 2SF

Among Cyril Bateman's findings this month are an interactive application-note site that helps you solve your rf matching problems. But first, news on Pentium bugs...

Hands-on Internet

While drafting this column, reports of the 'Dan-0411' floating point bug in Pentium Pro and Pentium II processors, and the 'FOOF' bug in both Classic and MMX Pentium processors, were lead news items for several on-line papers.

The Dan-0411 floating point bug, affecting Pentium Pro and Pentium II processors, was originally reported by news.com[1] on 2 May last year. It was played down initially, since it was expected to only cause system crashes but not computational errors. Having since been shown to cause calculation errors, it is now being taken seriously and reports on the bug have been updated.

This problem results from the processor calculating correctly, but failing to issue an error flag when returning an integer result too large for the integer value range. Full details of corrective actions can be found on Intel's page, **Fig. 1**.[2]

The second bug, FOOF, affecting Classic and MMX Pentiums, is potentially much more serious, since it could allow malicious crashing of systems. Apparently, these processors include four lines of machine code which comprise an invalid instruction. Being invalid, it would not be called by an operating system or conventional software, so would not affect most users. But, Internet service providers[3] have particular concerns that malicious hackers using this invalid instruction, could deliberately crash their servers, **Fig. 2**.

Clearly headlined by news.com,[1] Texas – the state not the company by the way – has filed suit against Microsoft, alleging possible anti-trust activities. Several other states are expected to follow this example, **Fig. 1**.

Following from last months reports about the IE4.0 problems, a fix for the security hole problem has been posted on Microsoft's Web site.

Fig. 1. More Intel bugs found and the anti-trust campaign against Microsoft continues.

Circuit applications

I mentioned last month that a wealth of component data and circuit application notes can be found on Internet. For those of you with a particular interest in measurement techniques, one of the best sources can be found on Hewlett Packard's Test and Measurement page.[4] This lists some 200 informative articles, all relating to measurements, **Fig. 3**.

Many of these articles can be downloaded as PDF files and then viewed via Acrobat, which is readily available. The remainder can be ordered by e-mail or telephone request. For many years I have found HP application notes invaluable, particularly as a source of error reduction techniques that help me improve the accuracy of high-frequency measurements.

The company's on-line service now includes interactive application notes. One example teaches basic impedance matching[5] by using an interactive on-line Smith-chart and 'S' parameters, together with a choice of pre-configured matching *C-L* networks. Simply select your desired network and matching problem, and adjust on-screen sliders to observe their effect, **Fig. 4**.

An introduction page, giving full assistance with these exercises, is available on-line. Those of you wishing to learn more can also download HP's invaluable Application Note 95-1, 'S-Parameter Techniques for faster, more accurate network design'. This long established tutorial originally appeared in their Journal of February 1967. A larger, more recent companion, Application Note 154, 'S-Parameter Design' is not available on-line, but can be requested.

A rather different application note from Tele Quarz in Germany can be downloaded together with a matching software program.[6] It details a new method permitting standard Spice simulators to model quartz crystal oscillators.

One frequently used method relies on simulation using open-loop techniques. This new improved method is based on use of negative resistance models. Note however this improved method requires use of PSpice or an equivalent enhanced simulator. A basic 2G6 based simulator is not suitable, **Fig. 5**.

Simulation and design software

Two quite different simulators not previously reviewed, but both essentially Spice based, are illustrated. 'Spice-It', is based on the XSpice core software from Georgia Tech Research Corporation.[7] It is fully compatible with the current Berkeley 3F5 Spice standard.

The XSpice core software provides the advantage of having both analogue and event-based simulation, within the one

Where to surf

1	News.Com	http://www.news.com
2	Intel Corporation	http://www.intel.com/design/news/flag
3	Wired News	http://www.wired.com/news
4	Hewlett Packard T&M	http://www.tmo.hp.com/tmo/appnotes
5	Hewlett Packard T&M	http://www.tmo.hp.com/tmo/appnotes/interactive/an-95-1
6	Tele Quarz Group	http://www.telequarz.de/berichte/01_txt_e.htm
7	CAD-Migos Software Tools Inc.	http://www.mwmd.com/wineda/cad_migos/spiceit2.html
8	Compact Software Inc.	http://www.comsoft.com/products/SPICE/SPICE.HTM
9	University of Nebraska-Lincoln	http://engr-www.unl.edu/ee/eeshop/cad.html
10	Intusoft Spice links	http://www.intusoft.com/slinks.htm
11	PEMC Lab. at NCTU Taiwan	http://pemclab.cn.nctu.edu.tw/W3cad/pecad/plink.htm
12	Twinight Enterprises.	http://www.twinight.org/chipdir

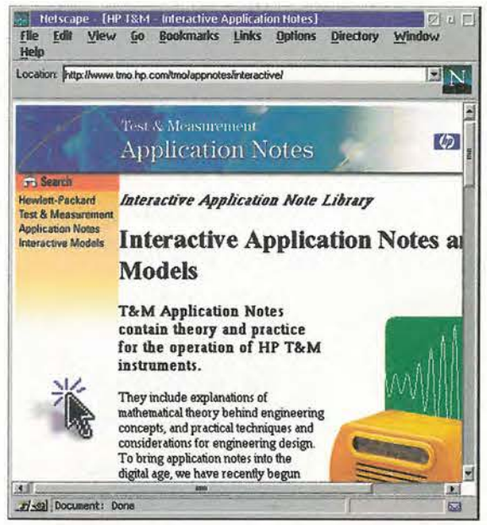

Fig. 3. Hewlett Packard Test & Measurement's application notes page. Many Application Notes in PDF for download, others in hardcopy on request.

Fig. 2. Internet Service Providers Pentium based servers await potential malicious attacks. Other on-line corporate servers could also suffer.

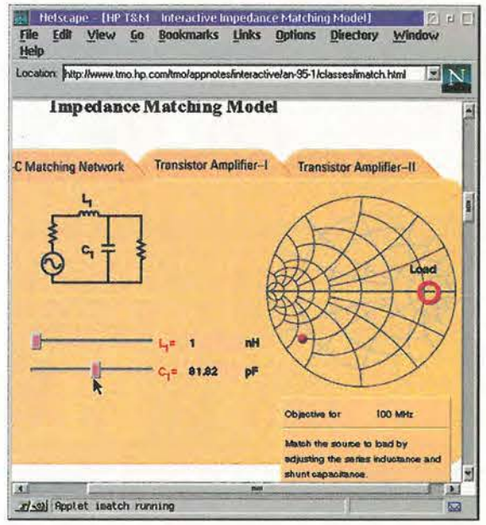

Fig. 4. A unique opportunity to study Smith-chart impedance matching on-line. Valuable opportunity for those without Smith chart software.

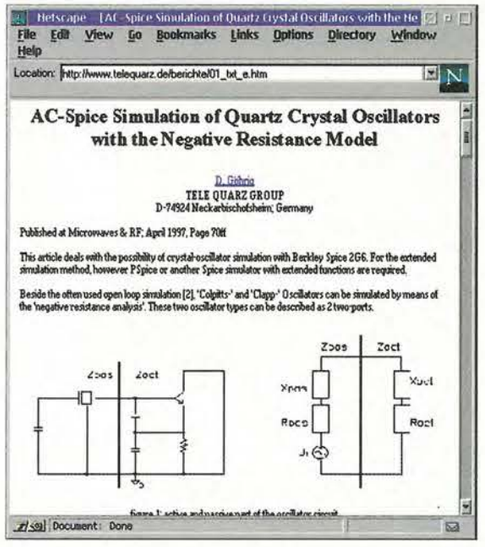

Fig. 5. A novel solution to a difficult simulation problem – quartz crystal oscillators. Simply use this add-on software with your existing Spice simulator.

Fig. 6. The 'Spice-It' simulator is based on the XSpice core, not just Berkeley Spice. Yet it remains fully compatible with Spice 3F5 simulators.

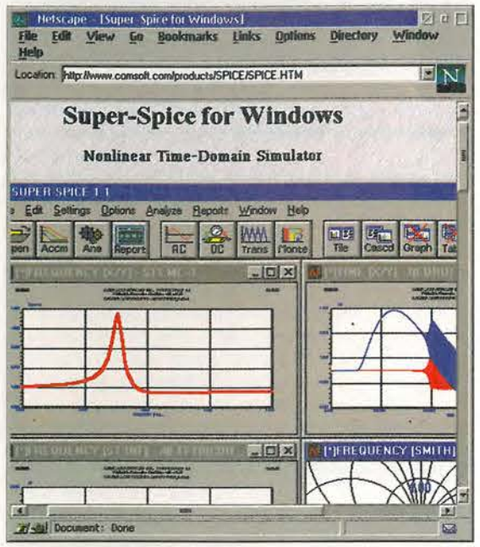

Fig. 7. Super-Spice, Compact Software's microwave-capable Spice simulator. It provides for use of distributed or lumped macromodels.

executable. It provides for ac/dc, transient, pole-zero, dc bias and thermal analyses in a software package which can be run using Windows 3.1, Windows NT or Windows 95 operating systems, **Fig. 6**.

Simulation at rf

In contrast, *Super-Spice* from Compact Software, is a non-linear time-domain Spice derivative, which has been much enhanced to support rf simulations.[8] Traditional Spice simulators are limited in their frequency range because they do not contain accurate distributed models for transmission lines, coupled lines, microstrip discontinuities or packaged rf active devices. Super-Spice addresses these core software problems and includes rf models for commonly used components, **Fig. 7**.

Essential for either version of Spice are accurate vendor supported semiconductor models. In earlier articles, month by month, I covered many sources of such models which I had recently decided should be updated. This perhaps is now no longer needed, since direct links, most of which I have tested as both current and working, can now be found on dedicated Web pages.

Mentioned previously in my November 1996 article, the student guidance page for eeshop at the University of Nebraska-Lincoln lists many sources to download CAD and simulation software.[9] Particularly useful are the links to the shareware version of *Pads*, the schematic and pcb design packages and the full *Pads* manuals.

Other links provide the evaluation versions of *PSpice 5.3* for dos and *PSpice 6.0* for Windows. Finally, for *AutoCAD* users, the 72K package of scripts designed to assist with pcb design, could prove invaluable.

Search news

While the many conventional search engines can be invaluable aids to locating electronic designers needs, three useful Web pages have collated together links to some of the most frequently needed design sources.

Intusoft's Spice Links page provides direct links to nineteen semiconductor makers Spice macromodel download sites.[10] In addition, several related engineering and electronic magazine pages can also be accessed from this small page, which downloads quickly when needed.

One larger university page I recently found is particularly useful for readers in the Southern Hemisphere. The PEMC Laboratory at NCTU Taiwan offers these same Spice macromodel links, together with a few other useful sites.[11] It also links directly to the Intusoft European mirror site.

A lengthy download from a much used site, which admits it can be slow, is full of extremely useful links. *Chip directory* at the Twinight Enterprises site now has eighteen mirrors, including two in UK.[12] Since this site has a mirror in most Internet countries, you should be able to find one local to you.

As suggested by its name, *Chip Directory* provides chip searching facilities by eleven different methods – voltage, family, function, etc. Numerous texts about hardware, software, FAQ's, CAD programs and manufactures are listed.

Perhaps of most immediate use to many, it lists and links directly to all semiconductor makers who now supply databooks on cd-rom – some 27 in all saving many hours of traditional on-line searching time, otherwise needed to order your cds.

Compact disk preferences

With so much data now available only on cd-rom, I much prefer a cd that needs neither installation nor hard-disk space. And I prefer one that works in conjunction with a pre-installed Acrobat reader.

With one excellent example I have recently received – Siemens' Passive Components disc – most of the information could be read simply by inserting the cd into my player and running my Acrobat 3.01 reader.

In contrast, in the same post I also received a cd which could only be accessed following an installation. I usually take great care to only install cds that include an uninstall routine. If you frequently use ones that have no uninstaller, it may become necessary to wipe your hard disk to regain the lost space.

Unfortunately, since the cd in question claimed to need only a megabyte of disk space, and did include an uninstall routine, I installed it. In the event, it also added over 6Mbytes of *Quick-Time* movie files into my Windows directory, without which it would not work.

Once installed, it turned out to contain only corporate publicity material, and no useful data, so for my needs didn't justify any long term hard disk space. Needless to say, the uninstall removed only the 1 Mbytes datafile, leaving the redundant *Quick-Time* movie files needlessly cluttering my hard disk. ■

Have you got the capacity to resist this inducement?

12 ISSUES free

ELECTRONICS WORLD
INCORPORATING WIRELESS WORLD

CIRCLE NO. 113 ON REPLY CARD

TOROIDAL TRANSFORMERS
High Quality Low Prices

In addition to our standard range we will be pleased to quote for your special requirements.

PRICE LIST

VA	Mail Order	Quantity Price Excluding VAT & Carriage 2+	10+	25+	50+	100+
15	14.59	10.21	7.69	5.69	5.52	5.35
30	16.04	11.23	8.45	6.25	6.06	5.89
50	17.83	12.48	9.40	9.95	6.74	6.53
60	18.02	12.61	9.49	7.02	6.82	6.61
80	17.98	12.60	9.49	7.02	6.81	6.60
100	21.07	14.74	11.11	8.21	7.96	7.72
120	21.54	15.08	11.35	8.39	8.15	7.89
150	25.98	18.19	13.70	10.12	9.82	9.53
160	23.83	16.68	12.56	9.28	9.00	8.73
225	30.10	21.07	15.87	11.73	11.39	11.04
300	34.32	24.02	18.09	13.38	12.98	12.58
400	46.19	32.32	24.35	17.99	17.47	16.94
500	50.48	35.34	26.61	19.67	19.09	18.51
625	53.09	41.36	31.14	23.02	21.24	20.57
750	58.39	44.23	33.30	24.62	23.89	23.17
1000	78.80	55.16	41.54	30.70	29.80	28.89
1200	82.45	57.72	43.46	32.12	31.17	30.23
1500	105.10	73.63	55.40	40.94	39.74	38.53
2000	114.45	96.13	72.39	53.51	51.93	50.36
2500	163.04	114.13	85.94	63.51	61.64	59.79

These prices are for 240volt primary and two equal secondaries with 8" colour coded fly leads.
Each transformer is supplied with a mounting kit (steel dish washer pads, nut and bolt)
Mail order prices include vat and postage.
Please do not hesitate to telephone or write with your particular requirements.

Airlink Sales Co
16 Knight Street, Sawbridgeworth, Herts CM21 9AT
Tel: 01279 600139 Fax: 01279 726379

CIRCLE NO. 114 ON REPLY CARD

Discretes
- 500mW output
- Separate TX and RX units
- UHF operation
- Fully synthesised
- Fully ETSI approved
- VHF options available
- Rich in features

TX £120 Volume Orders RX £140 Volume Orders

TT/TR Low Cost Modules
- 100mW output
- Separate TX and RX modules
- UHF operation
- Crystal controlled
- Fully ETSI approved

TT £50 Volume Orders TR £80 Volume Orders

WOOD & DOUGLAS
Wood & Douglas Limited
Lattice House, Baughurst, Tadley, RG26 5LP United Kingdom
Tel: +44 (0)118 981 1444 Fax: +44 (0)118 981 1567
e-mail: info@woodanddouglas.co.uk
http://www.woodanddouglas.co.uk

CALL NOW +44 (0)118 981 1444

CIRCLE NO. 115 ON REPLY CARD

Subscribe to Electronics World for 3 years but pay for just 2!

Please enter my subscription for:
(tick one of the following)

	UK	Europe	Rest of World	
1 year	☐ £34	☐ £49	☐ £59	
2 years	☐ £54	☐ £78	☐ £94	SAVE 20%
3 years	☐ £68	☐ £98	☐ £119	1 year FREE!

In every monthly issue
- Detailed circuit diagrams
- New product reviews
- Informative design-oriented explanations
- CAE software
- and more .....!

Full money back guarantee
If you're not completely satisfied with **Electronics World** within the first 60 days we'll refund your money in full - no questions asked.

Please allow 28 days for delivery of your first issue.

☐ Please tick here if you do not wish to receive direct marketing promotions from other relevant companies.

Three ways to pay
1 I enclose a cheque for £ _____ made payable to **Electronics World**.

2 Please charge my Visa/Mastercard/American Express/Diners Club *(please delete as appropriate)*

Card Number ☐☐☐☐☐☐☐☐☐☐☐☐☐☐☐☐

Expiry date ☐☐ / ☐☐

Signed Date

3 Please invoice me/my company. Purchase Order No. _____

Name

Job Title Company

Address

Tel. No.

Company VAT registration number

Return your completed form to:
Electronics World Subscriptions, FREEPOST RCC 2619,
PO Box 302, HAYWARDS HEATH, UK, RH16 3BR 087

Credit Card Orders
Tel: +44 (0) 1444 445566 (quoting code 087)

macromodels.

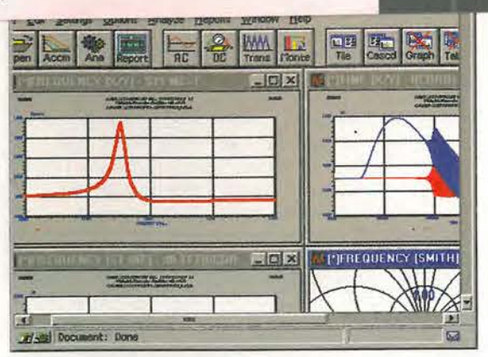

executable. It provides for ac/dc, transient, pole-zero, dc bias and thermal analyses in a software package which can be run using Windows 3.1, Windows NT or Windows 95 operating systems, **Fig. 6**.

Simulation at rf
In contrast, *Super-Spice* from Compact Software, is a non-linear time-domain Spice derivative, which has been much enhanced to support rf simulations.[8] Traditional Spice simulators are limited in their frequency range because they do not contain accurate distributed models for transmission lines, coupled lines, microstrip discontinuities or packaged rf active devices. Super-Spice addresses these core software problems and includes rf models for commonly used components, **Fig. 7**.

Essential for either version of Spice are accurate vendor supported semiconductor models. In earlier articles, month by month, I covered many sources of such models which I had recently decided should be updated. This perhaps is now no longer needed, since direct links, most of which I have

As suggested by its name, *Chip Directory* provides chip searching facilities by eleven different methods – voltage, family, function, etc. Numerous texts about hardware, software, FAQ's, CAD programs and manufactures are listed.

Perhaps of most immediate use to many, it lists and links directly to all semiconductor makers who now supply databooks on cd-rom – some 27 in all saving many hours of traditional on-line searching time, otherwise needed to order your cds.

Compact disk preferences
With so much data now available only on cd-rom, I much prefer a cd that needs neither installation nor hard-disk space. And I prefer one that works in conjunction with a pre-installed Acrobat reader.

With one excellent example I have recently received – Siemens' Passive Components disc – most of the information could be read simply by inserting the cd into my player and running my Acrobat 3.01 reader.

In contrast, in the same post I also received a cd which could only be accessed following an installation. I usually take great care to only install cds that include an uninstall routine. If you frequently use ones that have no uninstaller, it may become necessary to wipe your hard disk to regain the lost space.

Unfortunately, since the cd in question claimed to need only a megabyte of disk space, and did include an uninstall routine, I installed it. In the event, it also added over 6Mbytes of *Quick-Time* movie files into my Windows directory, without which it would not work.

Once installed, it turned out to contain only corporate publicity material, and no useful data, so for my needs didn't justify any long term hard disk space. Needless to say, the uninstall removed only the 1 Mbytes datafile, leaving the redundant *Quick-Time* movie files needlessly cluttering my hard disk. ■

RF Power Modules from TDC & Mitsubishi

Standard parts stocked, replacement parts for many Yaesu/ Icom transceivers, ideal for linear PA designs.

Part	Frequency	Pwr/Mode	Price (1 off)
M57726	144-148MHz	43W/FM	£43.71
M57729	430-450MHz	30W/FM	£42.00
M57737	144-148MHz	30W/FM	£27.23
M57762	1.24-1.3GHz	18W/SSB	£67.53
M57788M	430-450MHz	40W/FM	£66.99
M67715	144-148MHz	13W/FM	£36.48
M67727	144-148MHz	37W/SSB	£124.59
M67728	430-450MHz	60W/SSB	£99.04
MI407-01	Pin diode up to 800MHz/25W		£1.21

Many other frequencies/ power combinations available, please call with your requirements.
Data sheets available for specific items on request.

Call for Amateur/ Education discounts or volume pricing

COMING SOON - Linear power amplifier 'Starter Packs' for 2M & 70cm.

MITSUBISHI ELECTRIC

TDC also stock Modem, Networking and GPS receiver and antenna products, visit our web site at http://www.tdc.co.uk for more information.

TDC TELECOM DESIGN COMMUNICATIONS LTD

Stroudley Road
Basingstoke
Hampshire
RG24 8FN

Telephone : 01256 332800 Fax : 01256 332810
e-mail : sales@tdc.co.uk
Access/Visa accepted, prices include VAT @ 17.5%, Postage & Packing £5

CIRCLE NO. 113 ON REPLY CARD

TOROIDAL TRANSFORMERS
High Quality Low Prices

In addition to our standard range we will be pleased to quote for your special requirements.

PRICE LIST

VA	Mail Order	Quantity Price Excluding VAT & Carriage 2+	10+	25+	50+	100+
15	14.59	10.21	7.69	5.69	5.52	5.35
30	16.04	11.23	8.45	6.25	6.06	5.89
50	17.83	12.48	9.40	9.95	6.74	6.53
60	18.02	12.61	9.49	7.02	6.82	6.61
80	17.98	12.60	9.49	7.02	6.81	6.60
100	21.07	14.74	11.11	8.21	7.96	7.72
120	21.54	15.08	11.35	8.39	8.15	7.89
150	25.98	18.19	13.70	10.12	9.82	9.53
160	23.83	16.68	12.56	9.28	9.00	8.73
225	30.10	21.07	15.87	11.73	11.39	11.04
300	34.32	24.02	18.09	13.38	12.98	12.58
400	46.19	32.32	24.35	17.99	17.47	16.94
500	50.48	35.34	26.61	19.67	19.09	18.51
625	53.09	41.36	31.14	23.02	21.24	20.57
750	58.39	44.23	33.30	24.62	23.89	23.17
1000	78.80	55.16	41.54	30.70	29.80	28.89
1200	82.45	57.72	43.46	32.12	31.17	30.23
1500	105.10	73.63	55.40	40.94	39.74	38.53
2000	114.45	96.13	72.39	53.51	51.93	50.36
2500	163.04	114.13	85.94	63.51	61.64	59.79

These prices are for 240volt primary and two equal secondaries with 8" colour coded fly leads.
Each transformer is supplied with a mounting kit (steel dish washer pads, nut and bolt)
Mail order prices include vat and postage.
Please do not hesitate to telephone or write with your particular requirements.

Airlink Sales Co
16 Knight Street, Sawbridgeworth, Herts CM21 9AT
Tel: 01279 600139 Fax: 01279 726379

CIRCLE NO. 114 ON REPLY CARD

Radio Technology Direct

Top quality, top technology, top service. That's our commitment to you. We build both standard and custom modules and ship direct. We've been doing so for 20 years. No-one is better. Every product is made in England, with pride.

Here are some of our products. To order, just ring us direct (credit cards accepted).

If you want something you don't see here, ring us. We can almost certainly help.

SX450 The Wood & Douglas Flagship

- 500mW output
- UHF operation
- Fully synthesised
- Fully ETSI approved

£250 Volume Orders

RSX450 Intelligent Radio Modem

- 500mW output
- 9600 baud on air data rate
- Fully synthesised
- Fully ETSI approved

£450 Volume Orders

ST/SR450 The Discerning Discretes

- 500mW output
- Separate TX and RX units
- UHF operation
- Fully synthesised
- Fully ETSI approved
- VHF options available
- Rich in features

TX £120 Volume Orders RX £140 Volume Orders

TT/TR Low Cost Modules

- 100mW output
- Separate TX and RX modules
- UHF operation
- Crystal controlled
- Fully ETSI approved

TT £50 Volume Orders TR £80 Volume Orders

WOOD & DOUGLAS

Wood & Douglas Limited
Lattice House, Baughurst, Tadley, RG26 5LP United Kingdom
Tel: +44 (0)118 981 1444 Fax: +44 (0)118 981 1567
e-mail: info@woodanddouglas.co.uk
http://www.woodanddouglas.co.uk

CALL NOW +44 (0)118 981 1444

CIRCLE NO. 115 ON REPLY CARD

CIRCUIT IDEAS

Over £600 for a circuit idea?

New awards scheme for circuit ideas

- Every circuit idea published in *Electronics World* receives £35.
- The pick of the month circuit idea receives a Pico Technology ADC42 – worth over £90 – in addition to £35.
- Once every six months, Pico Technology and *Electronics World* will select the best circuit idea published during the period and award the winner a Pico Technology ADC200-50 – worth £586.

How to submit your ideas

The best ideas are the ones that save readers time or money, or that solve a problem in a better or more elegant way than existing circuits. We will also consider the odd solution looking for a problem – if it has a degree of ingenuity.

Your submission will be judged on its originality. This means that the idea should certainly not have been published before. Useful modifications to existing circuits will be considered though – provided that they are original.

Don't forget to say why you think your idea is worthy. We can accept anything from clear hand writing and hand-draw circuits on the back of an envelope. Type written text is better. But it helps us if the idea is on disk in a popular pc or Mac format. Include an ascii file and hard-copy drawing as a safety net and please label the disk with as much information as you can.

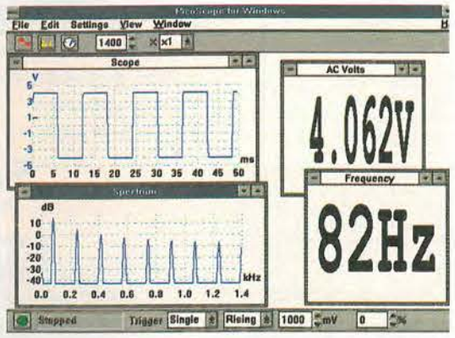

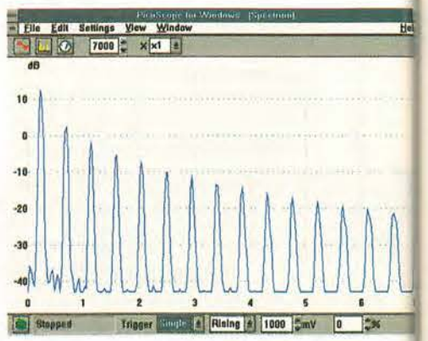

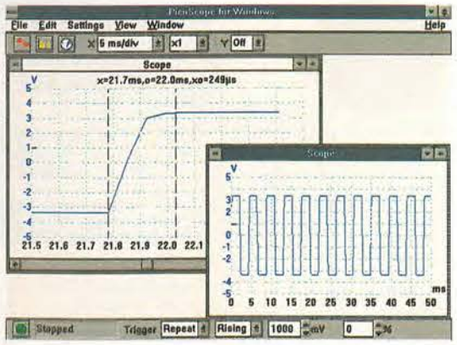

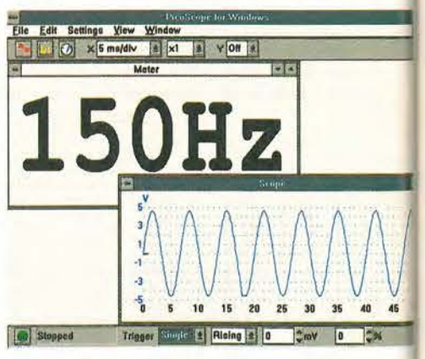

Turn your PC into a high-performance virtual instrument in return for a circuit idea.

The ADC200-50 is a dual-channel 50MHz digital storage oscilloscope, a 25MHz spectrum analyser and a multimeter. Interfacing to a pc via its parallel port, ADC200-50 also offers non-volatile storage and hard-copy facilities. Windows and DOS virtual instrument software is included.

ADC42 is a low-cost, high-resolution a-to-d converter sampling to 12 bits at 20ksample/s. This single-channel converter benefits from all the instrumentation features of the ADC200-50.

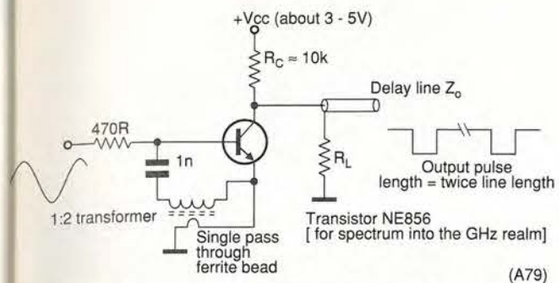

(A79)

Shape and length of pulses produced by this comb generator depend on the characteristics of the delay line alone. For short pulses with fast transistors, layout is crucial.

Pulse train generator

A train of pulses – a comb – is determined in pulse shape and duration solely by the characteristic of an open-circuit delay line, in the manner of a radar modulator, if the switching device on the input is fast enough.

When the transistor triggers, the feedback holds it in saturation until the delay line is discharged. After the pulse, the transistor remains in saturation until the drive signal turns it off and the delay line begins to recharge.

The circuit must not oscillate with the time constant of the feedback loop, which must be much greater than the delay time. This is prevented if collector current through resistor R_c is much lower than the pulse current and too low for oscillation. Resistor R_1 should be equal in value or lower than Z_0 so that the voltage on the line after the pulse is zero or negative.

If a poorer rise time is acceptable, a series *LC* circuit may be used instead of the line. A drive signal of any frequency and rise time will trigger the circuit, but a fast rise time gives least phase noise, as does a schottky diode clamp to stabilise the voltage to which the line charges.

P D Brook
Isle of Wight
(A79)

Electrostimulator

A simple circuit, this stimulator is an *RC* oscillator using p-n-p and n-p-n transistors and is only operative when the electrodes come into contact with a biologically active point to supply base current to Tr_2.

Oscillation frequency is set by R_1 and the response of the circuit to the resistance of the point touched is adjustable by R_5. Visible and audible indication is given by the led and piezoelectric transducer BF_1.

Vasiliy Borodai
Zaporozhje
Ukraine
(A50)

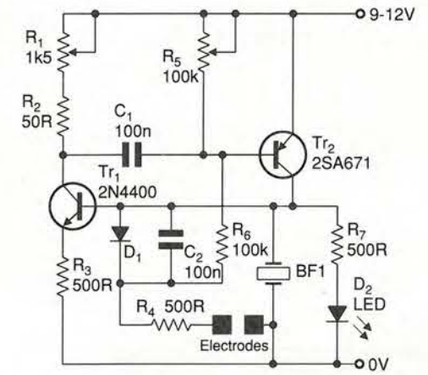

Simple oscillator forms a stimulator when the base circuit of Tr_2 is completed by the electrodes.

Bad news for car thieves

Many older cars have no factory-fitted engine immobiliser and the practice is to buy one ready made and fit it oneself or to ask a garage to do it. Either way, too many people know how it works and how and where it is fitted. Then again, one sometimes forgets to set it. Hidden switches do not stay hidden for long. This idea avoids all that.

Instead of simply removing the supply to the ignition, for which the cure is a couple of metres of wire, I use the car's own function switches, such as the side lights or windscreen wiper on different circuits, to turn the ignition on, using the circuit shown.

As triggers to the thyristor, I use the parking light or electric aerial voltage, the potentiometer being set to promote reliable firing. The spread of thyristors is quite large. To start the engine, turn on the ignition to supply the thyristor, switch on lights or aerial or whichever you have used, and then operate the cigar lighter. The thyristor fires and you may then drive off. Diesels need the relay to switch the fuel pump.

If a hi-jacker hi-jacks, the engine will keep running when the door is opened, but will cease to do so as soon as it shuts again.

G J Stroebel
Germiston, South Africa (A74)

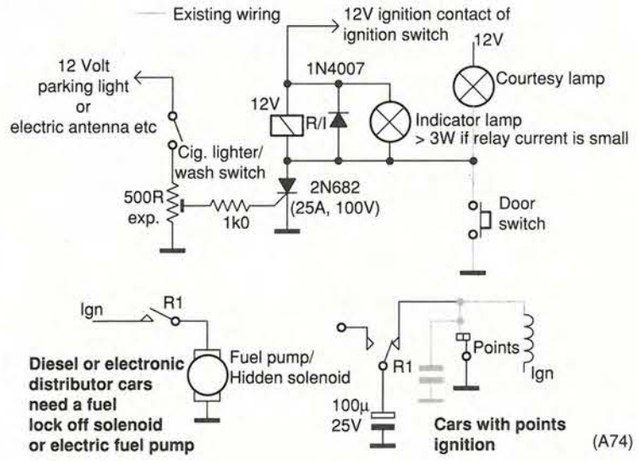

(A74)

Car thieves will need minds that are considerably more devious than is probably usual to overcome this engine immobiliser.

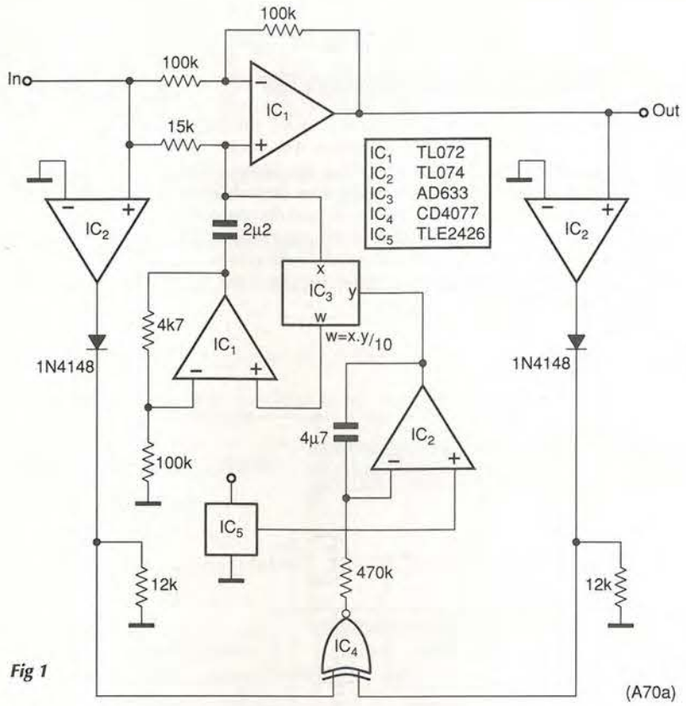

Fig 1

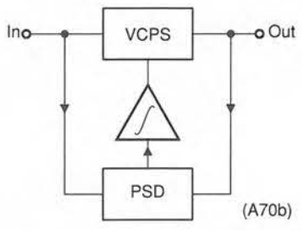

Fig. 2

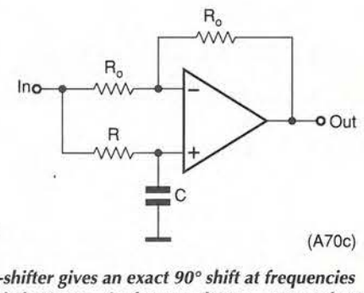

Fig 3

Phase-shifter gives an exact 90° shift at frequencies variable between – in the case shown – 5Hz and 700Hz.

90° phase shifter

Over a two-decade range of frequencies, 5-700Hz in the case shown in **Fig. 1**, this circuit provides a 90° phase shift.

It is effectively two distinct circuits, as seen in **Fig. 2**. The heart of the arrangement is a voltage-controlled phase shifter and a phase-sensitive detector, which observes any departure from 90° in the phase shift and integrates the result to cancel the error.

The basic phase shifter is seen in **Fig. 3**, which is the circuit of an all-pass filter that introduces a shift as a function of frequency. This shift is 90° when $\omega=1/RC$. If the effective capacitance of the phase shifter is varied, the 90° shift is made to occur at different frequencies; IC_3, a low-cost multiplier, performs this function, so that the control voltage is derived from the phase detector and integrator, which is now in the feedback loop.

Most of the circuit is supplied by ±12V, but the *CD4077* exclusive-nor gate uses only the +12V, the integrator being referred to +6V by the action of the rail splitter IC_5. When the phase shift is 90°, the gate sees a 50% duty cycle, which gives no result from the integration.

Giorgio Delfitto
University of Padova
Padova
Italy
(A70)

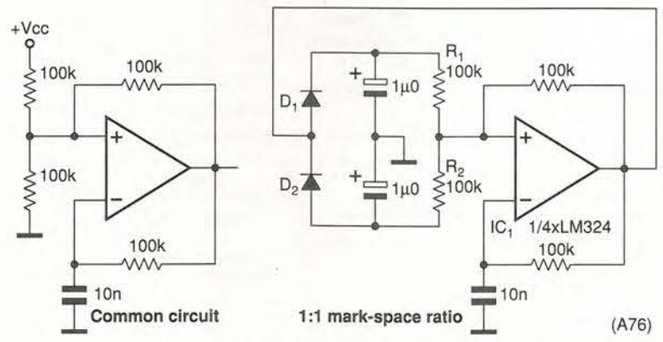

A better square-wave generator. The feedback avoids problems with variable op-amp saturation voltages.

1:1 mark/space oscillator

If you need a good square wave without going to the trouble of having a divide-by-two flip-flop and do not need the ultimate in accuracy, this circuit will do the job.

On the left, the common square-wave source, which has errors introduced by asymmetrical and temperature/supply voltage-dependent saturation voltages in the op-amp.

On the right, the answer. Provided R_1=R_2 and the diode characteristics match, and the op-amp inputs are matched, the output is 1:1. It is most important to match the resistors.

It is also important that the op-amp common-mode includes ground; if not, bleed resistors will be needed across the diodes to avoid latch-up.

P D Brooking
Isle of Wight
(A76)

B² Spice & B² Logic

New Version

New Features
Outstanding Performance

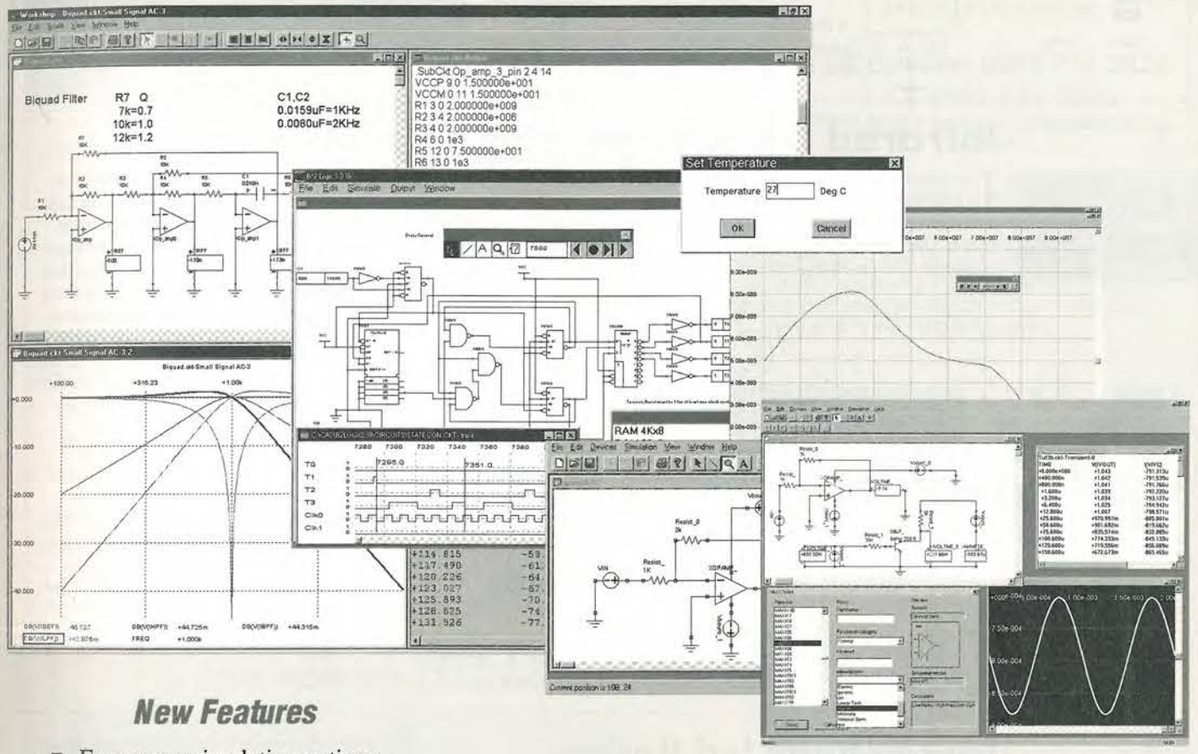

New Features

- Even more simulation options.
- Perform full temperature and parameter sweeps.
- New graphical functions.
- New libraries of parts including the entire Texas Instruments library.
- Nothing extra to pay for the libraries...they are all included in the price.

As always..

- Everything you would expect from a professional quality SPICE simulator.
- Fully integrated and interactive.
- No limit no maximum circuit size.
- Free technical support.
- 30 day money back guarantee.

B² Spice for analogue simulation £199
B² Logic for digital simulation £199
Special bundle price £295
B² Spice Lite (ideal for first time users) £42.75

Prices quoted exclude VAT
Existing users. If you have purchased a copy within the last 12 months you are entitled to a free upgrade.

Now available direct from Maplin Electronics & Cirkit Distribution Ltd.

Software for design engineers

B² Spice & B² Logic will give you the accurate results you need quickly and easily.

This software is used by thousands of designers, research institutions and universities around the world. But the best way to be certain that it's right for you is to try it, which is we're are giving you the opportunity to do, risk free for 30 days.

For more information call:

01603 872331

http://www.paston.co.uk/spice
email: rd.research@paston.co.uk

RD Research
Research House, Norwich Road, Eastgate, Norwich. NR10 4HA
Postage & packing £4.50. All trademarks are acknowledged.

CIRCLE NO. 116 ON REPLY CARD

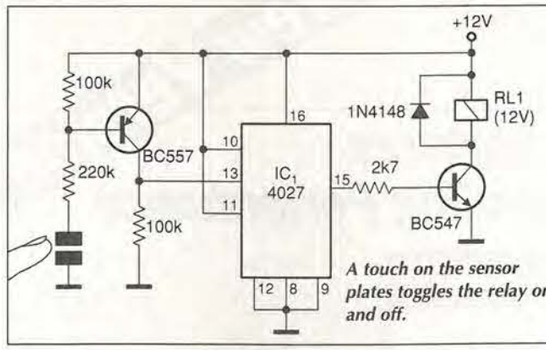

A touch on the sensor plates toggles the relay on and off.

Touch switch

Touching the metallic plates in the circuit shown causes the transistor to conduct and toggle the flip-flop, which turns the relay driver on. Touching them again turns it off. Current consumption is less than 1mA when the relay is off and up to 50mA when it is on.

Raj K Gorkhali
Kathmandu
Nepal
(A38c)

Infrared transmitter and receiver

ADC-42 WINNER

The transmitter of the Tx/Rx pair could hardly be simpler. Its reverse-biased transistor, in series with the infrared led, discharges the capacitor in pulses at about 160Hz, the led emitting light pulses at that frequency. A supply of 12V is needed since the lowest voltage to produce pulses is 8.5V. Current drain is under 0.5mA.

In the receiver, the quality of the transformer dictates the sensitivity; mine was taken from an old transistor radio. It does not oscillate, because of the bias arrangement, until a large enough pulse is received. When this arrives, and the cycle starts, the relay operates, collector voltage falls and oscillation stops until another pulse is received, giving clean relay operation.

Bias in the form of light comes from the extra *LD271* placed close to the *BP10383* to increase sensitivity.

Range of the two units is around 3-6m, depending on the transformer. A novel use, apart from controlling equipment, is as a proximity switch with both units facing the same way. Depending on surface reflectivity, range to an object can be up to 0.3m.

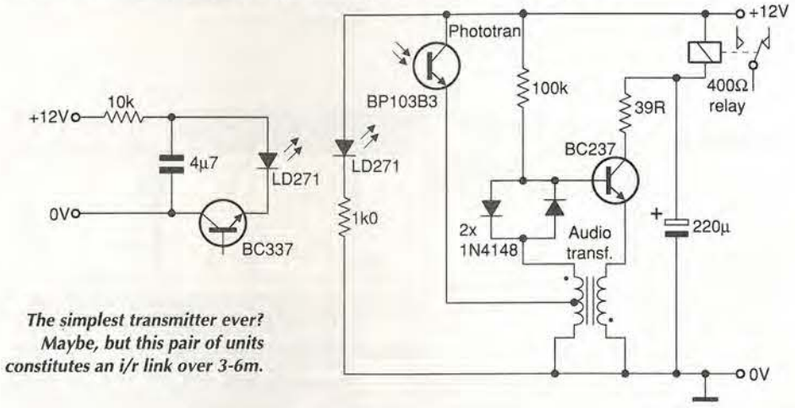

The simplest transmitter ever? Maybe, but this pair of units constitutes an i/r link over 3-6m.

D Di Mario
Milan
Italy
(A75)

Low-voltage led flasher

You can make a low-voltage and low-current led flasher with adjustable On time and flash rate using one of the low-voltage microprocessor-supervisor ics; this one uses two NiCd or nickel-metal-hydride cells and drives a high-brightness led. It is suitable for use in shop displays, in toys and to make thieves think there is an alarm fitted to your car.

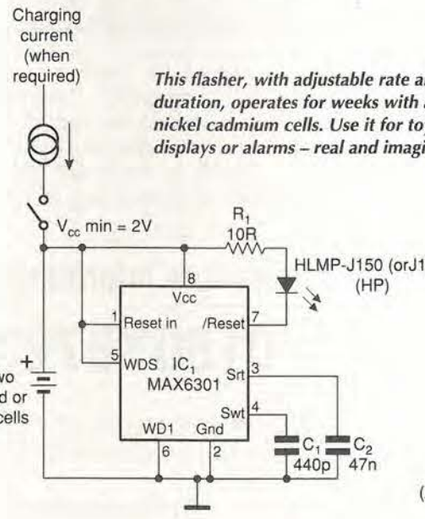

This flasher, with adjustable rate and flash duration, operates for weeks with a pair of nickel cadmium cells. Use it for toys, displays or alarms – real and imaginary.

Reset threshold and duration and watchdog period can all be adjusted in IC_1 by external components and a small capacitor gives a 500-times watchdog period by the connection of WDS (watchdog select) to the positive supply. Connections shown set the internal reset threshold to its lowest value of 1.22V, which makes the led remain on continuously when the battery goes flat.

Capacitor C_1 would normally set the reset period, but here it sets the led flash duration to 100ms; C_2 sets the flash rate to an eye-catching two per second. Both capacitors should have a leakage current of less than 10nA – not difficult in small values.

During charging, maximum V_{CC} is about 4V and, since the ic withstands up to 7V, circuit and battery can be wired together. Because the led flashes are so short, it is difficult to see any decrease in brightness as the battery discharges.

One AA primary cell will give faint flashes for about a week but, for most applications, two NiCd cells offers the best compromise between cost and battery life.

Kevin Bilke
Maxim Integrated Products
Reading
(A72)

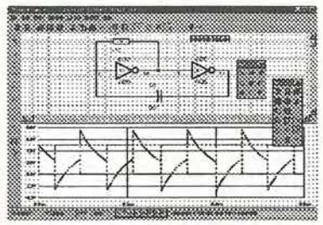

Schematic Capture with a FREE mixed mode simulator.

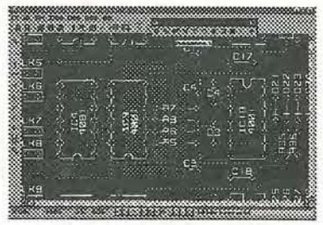

Integrated PCB Design with autorouter & CADCAM support.

Looks like Quickroute 4.0 has Got It All!

FREE*phone* 0800 731 2824
FAX 0161 476 0505
FREE Demo on www.quickroute.co.uk
Ref 401

The new Quickroute 4.0 is here and with it a revolution in our price/performance structure. We've kept the features the same at all levels of Quickroute and just varied the number of pins you can use in a design. So now you can get started FAST with Quickroute 4.0 for just £79 (300 pins), £149 (800 pins) or £249 (full access). Prices exclude P+P and VAT.

All versions of Quickroute 4.0 now include: *New user interface with dockable tool bars *Multi-sheet schematic capture *Power rail & data bus support *1-8 layer autorouter *For a limited period a FREE integrated 32 bit mixed mode simulator *Copper Fill *Engineering Change *Gerber import and export *Export NC-Drill, WMF, DXF and SPICE files *Netlist import and export *Over 1000 library parts

Send me a FREE DEMO. My name, address & phone number are:

Send To: Quickroute Systems Ltd, FREEPOST 13136, Stockport, SK4 1BS
Outside the U.K please fax this coupon. (c) 1997. All rights reserved. Ref 401.

QR4™ QUICKROUTE

CIRCLE NO. 117 ON REPLY CARD

M&B RADIO (LEEDS)
THE NORTH'S LEADING USED TEST EQUIPMENT DEALER

OSCILLOSCOPES
HP 54111D 500 MHz digitizing scope (colour display) £2250
HP 54112D 100 MHz 4 channel digitizing scope (colour display) £1750
HP 54201D 300 MHz 2 channel digitizing (27 channels logic state triggering) £1750
HP 1740A 100 MHz 2 channel £395
TEKTRONIX 2465ADM 350 MHz 4 channel (digital multimeter, GP-IB/opt 09) £2500
TEKTRONIX 2230 100 MHz 2 channel digital storage £1750
TEKTRONIX 2220 60 MHz 2 channel digital storage £1500
TEKTRONIX 2445 150 MHz 4 channel GP-IB £1400
TEKTRONIX 2246 100 MHz 4 channel autocal £1200
TEKTRONIX 7903/7A26 x2/7B80 200 MHz 4 channel £450
TEKTRONIX 7603/7A18A x2/7B53A 4 channel £350
TEKTRONIX 475A 250 MHz 2 channel £600
TEKTRONIX 475 200 MHz 2 channel ..... from £400
TEKTRONIX 466 100 MHz 2 channel £450
TEKTRONIX 465B 100 MHz 2 channel opt 05 ..... £500
TEKTRONIX 465 100 MHz 2 channel ..... from £350
TEKTRONIX 434 25 MHz 2 channel storage £300
TEKTRONIX 2215 60 MHz 2 channel £325
TEKTRONIX 2225 50 MHz 2 channel £450
TEKTRONIX 2235 100 MHz 2 channel £700
TEKTRONIX TM 504 4 slot mainframe £150
PHILIPS PM 3217 50 MHz 2 channel £325
PHILIPS PM 3055 50 MHz 2 channel £425
PHILIPS PM 3057 50 MHz 2 channel £400
PHILIPS PM 3264 50 MHz 4 channel £300
PHILIPS PM 3263X 100 MHz delay/events £400
PHILIPS PM 3310 60 MHz digital storage £600
PHILIPS PM95 50 MHz scopemeter (BOXED NEW) £500
IWATSU SS 6122 100 MHz 4 channel with cursors £800
IWATSU SS 5710 60 MHz 4 channel £400
IWATSU SS 5416A 40 MHz 2 channel £250
HITACHI V1100 100 MHz 4 channel with cursors £750
HITACHI V134 10 MHz digital storage £245
GOULD 420 20 MHz digital storage 2 channel 4 colour hardcopy £1250
GOULD 4035 20 MHz digital storage + remote keypad £600
GOULD 1401 20 MHz digital storage 2 channel £400
GOULD 9200 20 MHz 2 channel £195
GOULD OS4000 10 MHz digital storage 2 channel £160

SPECTRUM ANALYSERS
TEKTRONIX 494P 10 KHz-21 GHz (1 year cal & warranty) £9000
TEKTRONIX 492P 10 KHz-21 GHz OPT 001/002/003 ..... £6000
TEKTRONIX 7L12 10 KHz-1800 MHz + mainframe £1000
TEKTRONIX 7LS + L3 OPT 2S tracking gen. + mainframe £1000
TAKEDA RIKEN TR4172 9 KHz-1800 MHz spectrum/network analyser £8000
ANRITSU MS610A 10 KHz-2 GHz spectrum analyser £2750
HP 8754A 4 MHz-1300 MHz network analyser £2000
HP 8407A/8412B network analyser 0.1-110 MHz £400
HP 8590A 10 MHz-1.5 GHz spectrum analyser £4250
HP 8559B/182T 10 MHz-21 GHz £3500
HP 3582A 0.02 Hz-25.5 KHz 2 channel signal analyser £1800
HP 3562A 64 uHz-100 KHz dynamic signal analyser (1 year cal & warranty) £6000
HP 140T/8552B/8553B 10 KHz-110 MHz £450
HP 141T/8552B/8554B 100 KHz-1250 MHz £1200
HP 141T/8552B/8555A 10 MHz-18 GHz £1500
MARCONI TF2370 30 Hz-110 MHz digital storage (as new) £750
BRUEL & KJAER 2033 20 Hz-20 KHz audio £750

SIGNAL GENERATORS
HP 8904A DC-600 KHz multifunction synthesizer £2500
HP 3325A 1 MHz function generator £1350
HP 3114A 0.001 Hz-19.99 MHz function/waveform monitor £1400
HP 3586C 50 Hz-32.5 MHz selective level meter £1500
HP 8683D 2.3 GHz-13 GHz OPT 001/003 solid state generator (as new) £2950
HP 8656A 100 KHz-990 MHz signal generator £2500
HP 8660C/86631B/86603A £2000
HP 8620C/86220A 10-1300 MHz sweeper £600
HP 8620C/86230B 1.8 GHz-4.2 GHz sweeper £1000
HP 8620C/86241A 3.2-6.5 GHz sweeper £1000
HP 8620C/86242D 5.9-9 GHz sweeper £1200
HP 8620C sweeper mainframes (as new) £250
HP 8640B 500 KHz-512 MHz signal generator £600
HP 8654B 10 MHz-520 MHz RF generator £300
HP 3200B 10 MHz-500 MHz oscillator £200
HP 3336B 10 Hz-21 MHz synthesizer/level meter £600
HP 3320A frequency synthesizer 0.1 Hz-13 MHz £495
HP 3312A 0.1 Hz-13 MHz function generator £400
HP 3310B 0.0005 Hz-5 MHz function generator £200
HP 8005B 0.3 Hz-20 MHz pulse generator £275
TEKTRONIX 2901 time mark generator £200
ADRET 7100D 300 KHz-1300 MHz signal generator £1500
MARCONI TF2022 10 KHz-1000 MHz signal generator £1800
MARCONI TF2017 10 KHz-1024 MHz signal generator £2000
MARCONI TF2018 80 KHz-520 MHz signal generator £1000
MARCONI TF2171 10 MHz-520 MHz with synchronizer £450
MARCONI TF2015 10 MHz-520 MHz £300
MARCONI TF2008 10 KHz-510 MHz RF generator £300
MARCONI TF2016 10 KHz-120 MHz (c250) TF2016A £295
FARNELL PSG520 10 MHz-520 MHz synthesized £350
FARNELL SSG1000 100 KHz-1000 MHz synthesized £1500
FLUKE 6011A 10 Hz-11 MHz synthesized signal generator £1000
ROHDES & SCHWARTZ APN62 0.1 Hz 260 KHz LF gen. (new) £2000
GIGA GR1101A 12 GHz-18 GHz pulse generator £600
PHILIPS PM5326 100 KHz-125 MHz RF generator £400
ADRET 2230A 200 Hz-1 MHz synthesized source £195
WAVETEK 193 20 MHz sweep modulation generator £400
WAVETEK 171 2 MHz synthesized function generator £450
WAVETEK 182 0.002 Hz-2 MHz function generator £175
SAYROSA MA 30 10 Hz-100 KHz £175

TEST EQUIPMENT
ELECTRO-METRICS EMC-25 MKIII interference analyser 10 KHz-1 GHz £995
BALL EFRATROM MRT-H rubidium frequency standard £4000
WAVETEK 1018A log lin RF peak power meter DC-26 GHz £1000
ANRITSU MS65A 2 GHz error detector £950
GRUNDIG VG1000 video generator £300
TEKTRONIX 1141/SPG1/1TSG11 pal video generator £1500
TEKTRONIX 145 pal gen. lock test signal generator £1500
TEKTRONIX 521A vector scopes £300
TEKTRONIX A6902A isolator £450
TEKTRONIX 1502 TDR cable tester £400
ROHDES & SCHARZ URE 10 Hz-20 MHz RMS voltmeter £400
SCHLUMBERGER 7702 digital transmission analyser (new) £500
SCHLUMBERGER AF403 3 tone generator/modulator £150
MARCONI TF2305 mod meter 50 KHz-2.3 GHz £2000
MARCONI TF2871 data communications monitor £900
MARCONI TF2600 true RMS voltmeter £1250
MARCONI 6950/6910 10 MHz-20 GHz RF power meter £800
MARCONI 6593A VSWR indicator £250
MARCONI 6460/6421 10 MHz-12.4 GHz RF power meter £250
MARCONI TF2306 programmable interface unit £400
MARCONI TF2432A 10 Hz-560 MHz frequency counter £100
HP 4954A protocol analyser + HP 18135A pod £2000
HP 8508A vector voltmeter £3250
HP 8970A noise figure meter £3,500
HP 3771A Tl-datacom test set £1750
HP 5342A 500 MHz-18 GHz microwave frequency meter ..... from £900
HP 5334A universal systems counter £750
HP 5335A universal systems counter £950
HP 5345A 1.5 MHz-26.5 GHz counter/5355A/5356A+B sensors £2000
HP 5328A universal frequency counter + dvm £300
HP 435B/8481A/8484A/11708A 10 MHz-18 GHz (new)HP case/manuals) £800
HP 435B/8481A 10 MHz-18 GHz RF power meter £800
HP 435A/8482AH 100 KHz-4.2 GHz RF power meter £500
HP 432A/478A 10 MHz-10 GHz RF power meter £275
HP 436A RF power meters £650
HP 8477A RF power meter calibrator £225
HP 5087A distribution amplifier (new) £750
HP 3581C 15 Hz-50 KHz selective voltmeters (as new) £400
HP 333A distortion analyser £295
HP 11710A down converter £250
HP 59401A bus system analyser £200
HP 400E 10 Hz-10 MHz AC voltmeter £125
HP 3466A 4.5 digit autoranging multimeter £200
HP 3437A 3.5 digit high speed system voltmeter £200
HP 3456A 5.5 digit bench multimeter £495
HP 3468A 5.5 digit multimeter/auto cal (LCD) £400
HP 5004A signature analyser £150
HP 5005A signature multimeter £200
HP 6448A DC power supply 0-600v/0-1.5 amp £750
HP 6253A dual DC power supply 2x 0-20v/0-3 amp £200
HP 6825A power supply/amplifier –20v to +20v/0-2 amp £250
HP 11665B 150 MHz-18 GHz modulator £350
HP 11582A attenuator set DC-18 GHz £500
HP 355C RF step attenuators 0-12 dB DC-1 GHz (NEW) £195
HP 355D RF step attenuators 0-120 dB DC-1 GHz (NEW) £195
BIRD 8323 30 db coaxial attenuator 100W £200
BRADLEY 192 oscilloscope calibrator £500
KEMO DP1 1 Hz-100 KHz phase meter (new) £150
WAYNE KERR 4225 LCR meter £350
AVO 215-L/2 AC/DC breakdown/ionisation tester £400
FARNELL RB103035 electronic load £400
FARNELL PDD3502 dual power supply 0-35v 2 amp £250
FARNELL TSV70 power supply 0-70v 0-10 amp £300
FARNELL AP60-50 power supply 0-60 volt 0-50 amp £600
SIEMENS D2108 200 KHz-30 MHz level meter £350
SIEMENS W2108 200 KHz-30 MHz level oscillator £350
NARDA 3041-20 500 MHz 1000 MHz directional coupler 20db £125
NARDA 3044B-20 3.7 GHz-8.3 GHz 20db directional coupler £150
NARDA 60132 solid state amplifier 8 GHz-12 GHz £100
SAYROSA AMM 1.5 MHz-2 GHz automatic modulation meters £175
REDIFON RA500 100 Hz-30 MHz receivers £400
RACAL RA17 30 MHz valve receivers £150
RACAL RA1218 30 MHz receivers £350
RACAL RA1772 30 MHz receivers £650
RACAL 2309/2294/2295/2296 20 MHz-1000 MHz receivers £1000
RACAL RA1779/MA 1107 30 MHz receiver £1500
RACAL 9063 two tone oscillator £200
RACAL 9008 1.5 MHz-2000 MHz automatic modulation meter £300
SYSTRON DONNER 6520 10 MHz-20 GHz microwave counter £750
RACAL DANA 9904M 50 MHz universal counter timer £95
RACAL DANA 9916 10 Hz-200 MHz frequency counter £95
RACAL DANA 9915 10 Hz-520 MHz frequency counter £95
RACAL DANA 9916 10 Hz-520 MHz frequency counter £150
RACAL DANA 9917 10 Hz-1100 MHz frequency counter £295
RACAL DANA 9908 10 Hz-1100 MHz universal counter timer £400
RACAL DANA 9921 10 Hz-3000 MHz frequency counter £400
RACAL DANA 1991 10 Hz-160 MHz universal counter timer 9 digit £395
RACAL DANA 1992 10 Hz-1300 MHz nanosecond counter £600
RACAL DANA 9300 RMS voltmeter £350
RACAL DANA 9301A true RMS RF millivoltmeter £2000
RACAL DANA 6000 microprocessing digital voltmeter £250
BRUEL & KJAER 2971 phase meter £300
DATRON 1065 autocal digital multimeter £400
FLUKE 8505A digital multimeter £750
FLUKE 8506A thermal RMS multimeter £1000
FLUKE 3330B prog constant current/voltage calibrator £450
FLUKE 5200A AC calibrator £2000
FLUKE 5205A precision power amp £2750
FLUKE 5440B direct volts calibrator £4950
RF MICROSYSTEMS INC. AN/TRC-176 VHF/UHF K&L filters £400

SPECIAL OFFERS
FLUKE 25 high spec digital multimeters with manual & probes (as new) £70
SMITHS 3" dia altimeters £65
BIRD 43 RF wattmeters £90
BIRD 43 RF wattmeters + case/6 inserts £170

ALL PRICES PLUS VAT AND CARRIAGE • ALL EQUIPMENT SUPPLIED WITH 30 DAYS WARRANTY

86 Bishopsgate Street, Leeds LS1 4BB
Tel: (0113) 2435649 Fax: (0113) 2426881

Visit our Web site
http://www.mb-radio.co.uk
e-mail info@mb-radio.co.uk

CIRCLE NO. 118 ON REPLY CARD

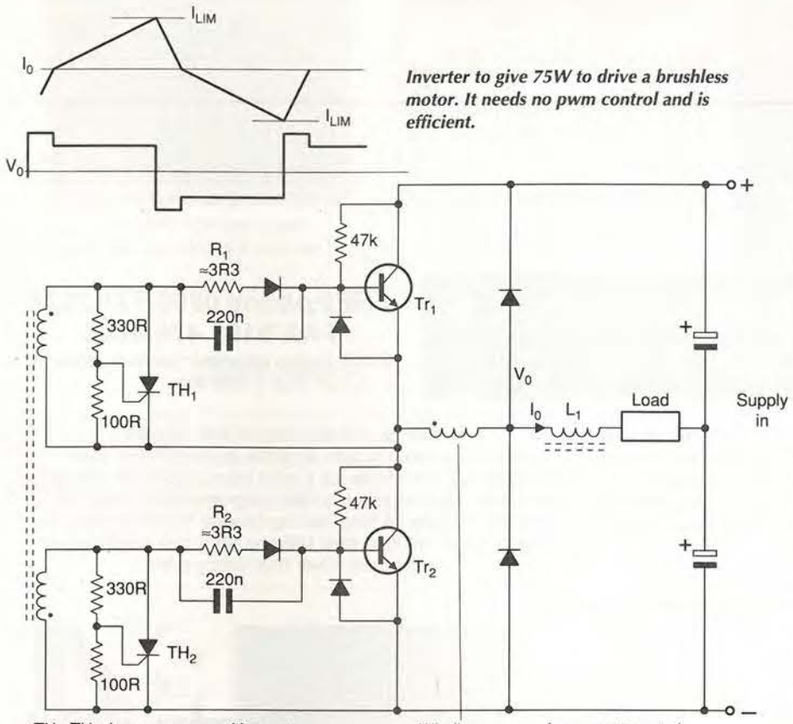

Inverter to give 75W to drive a brushless motor. It needs no pwm control and is efficient.

TH_1, TH_2: Low power sensitive gate thyristors eg BTX18
Tr_1, Tr_2: Mains switching transistors

Winding on drive transformer ratio ≈ 1:12 + 12

L_1: current control inductor
R_1, R_2: ≈ 3R3 for 4A peak I_C

(A77)

75W inverter for brushless dc motor

Meant to drive a brushless dc motor, this inverter provides 75W at 100Hz and, in some conditions, needs no pulse-width modulation control chip, has low switching loss and rapid current protection.

The ratio of the drive transformer (1:12+12) determines the ratio of collector to base current. At the start of each half-cycle, collector current ramps up, the voltage drop across $R_{1,2}$ being proportional to collector current. Peak collector current and period are set by the point at which this voltage drop triggers $TH_{1,2}$.

When a thyristor triggers, its associated transistor switches off and, as soon as its collector current falls to zero, stored energy in the drive transformer provides base current for the other transistor, which will not conduct until the energy in L_1 has been returned.

The current-control inductor L_1 controls the rate of current increase, the inductor and load also controlling frequency. If desired, a *CR* time constant in the thyristor gates will control timing.

Collector/base resistors start oscillation and require the series diodes in the base current path.

P D Brooking
Isle of Wight
(A77)

Simple window detector uses single gate

A simple window detector based on a single exclusive-or gate such as the 74HC86 is shown in **Fig. 1**.

Output of the gate is only high when its inputs are at different logic levels. Initially, with no input, both levels are the logic low, so the output is low. As the input rises, there comes a point where one input is greater than the logic threshold and the other less than, so the output is high. When both input rise above the threshold, which is about 40% of supply voltage, the output returns low.

In the above case the low and high window voltages are given by,

$$V_l = V_{th}\frac{R_1 + R_2 + R_3}{R_2 + R_3}$$

and

$$V_h = V_{th}\frac{R_1 + R_2 + R_3}{R_3}$$

respectively.

For voltages less than $V_{cc}/2$ a simple amplifier may be used. One possibility is shown in **Fig. 2**. By careful selection of R_1, R_2, R_3 and R_4, a low-voltage window comparator can be built.

R.S .Schneiderman
Jerusalem
Israel

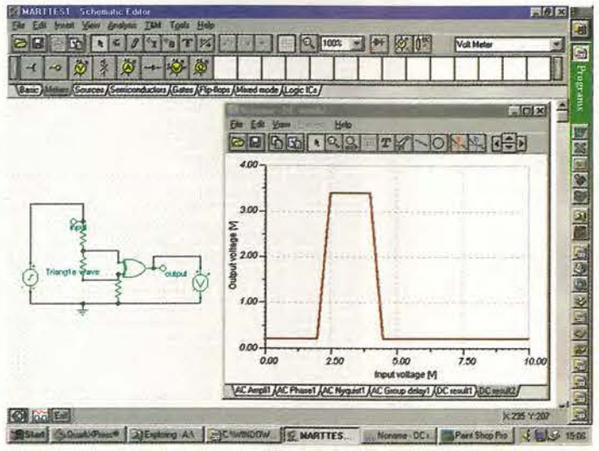

Simulated output of Fig. 1 with a 0-10V input ramp using Tina. All resistors 1kΩ

Fig. 1. Below, three resistors and one gate produce a window comparator. In Fig. 2, right, addition of a transistor allows lower threshold voltages.

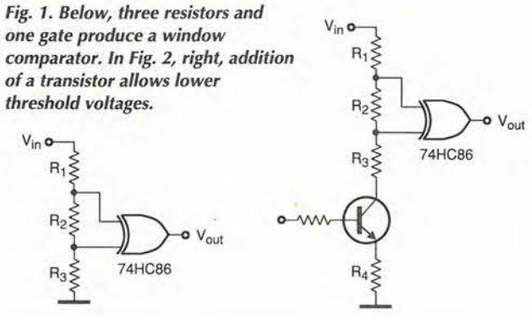

The Phantom Power Box
48 volt microphone phantom powering unit
Professional portable units operating from an internal PP3 battery or external mains adaptor

★ Suitable for converting any microphone amplifier to P48 standard phantom power ★ High efficiency DC to DC converter for extended battery life ★ Accurate line balance for high common mode rejection ★ Low noise and distortion ★ Extensive RFI protection

The Balance Box (mic/line amplifier) – **The Headphone Amplifier Box** – **The *OneStop*** DIN rail mounting radio frequency interference filter and voltage transient protector for voltage and current loop process signal lines

Conford Electronics **Conford Liphook Hants GU30 7QW**
Information line: 01428 751469 Fax: 751223
E-mail contact@confordelec.co.uk
Web http://www.confordelec.co.uk/catalogue/

CIRCLE NO. 119 ON REPLY CARD

Computer Controlled Robotics
Bring Electronics to Life

Technology Education Index
Telephone for our catalogue or visit our web site for further details
40 Wellington Road, Orpington, Kent BR5 4AQ
Telephone - (01689) 876880
Web Site - http://www.technologyindex.com
Prices exclude VAT and £4.50 carriage

CIRCLE NO. 120 ON REPLY CARD

Data Acquisition
Virtual Instrumentation
Environmental Monitoring ▶
Pico Technology

'Pico's PC Converters monitor and record temperature and humidity'.

EnviroMon
Temperature / Humidity Logger & Alarm System
EnviroMon has many applications in: **food processing** - storage and distribution, **energy management** - waste energy, heating and processing, **agriculture** - monitoring humidity in greenhouses, and in **hospitals** - accurate monitoring of temperature sensitive items.

- ▼ Monitors up to 30 channels of temperature over a 400 m. distance.
- ▼ -55 to 100°C temperature range (typical accuracy ±0.2°C).
- ▼ Data can be downloaded to PC.

EnviroMon
Starter Kit from £393.00
3 temperature Sensors on 5m lead, 3 channel Converter, Enviromon Logger, cables & fittings. Expandable at any time for around £50 / channel

TC-08
8 channel Thermocouple to PC Converter
Simple to use thermocouple to PC interface.

- ▼ Connects to serial port - no power supply required.
- ▼ Supplied with PicoLog data logging software.
- ▼ Resolution 0.1°C.

TC-08 **£199.00**
Supplied with serial cable and adaptor.
Calibration certificate £25.00.
Thermocouple probes available.

NEW

TH-03 **3 channel Thermistor to PC Converter**

- ▼ Connects to serial port - no power supply required.
- ▼ PicoLog data logging software.
- ▼ -55 to 105°C temperature range
- ▼ Resolution 0.01°C.

TH-03 **£79.00**
Supplied with serial cable and adaptor.
Thermistor sensors available.

Call for free demo disk or download our web site: http://www.picotech.com
All prices exclusive of VAT.

Broadway House, 149-151 St Neots Rd, Hardwick, Cambridge. CB3 7QJ UK
Tel: (0)1954 211716 Fax: (0)1954 211880
E-mail: post@picotech.co.uk

pico Technology Limited

CIRCLE NO. 121 ON REPLY CARD

Exclusive *EW* reader offer

Synthesised low-power transceiver pair at 30% discount

Until 31 March, Radio-Tech is offering a pair of UK designed and built TXR-DTR100 data transceivers at £299.69 including VAT and UK next day delivery. The normal selling price of the pair is £436.98.

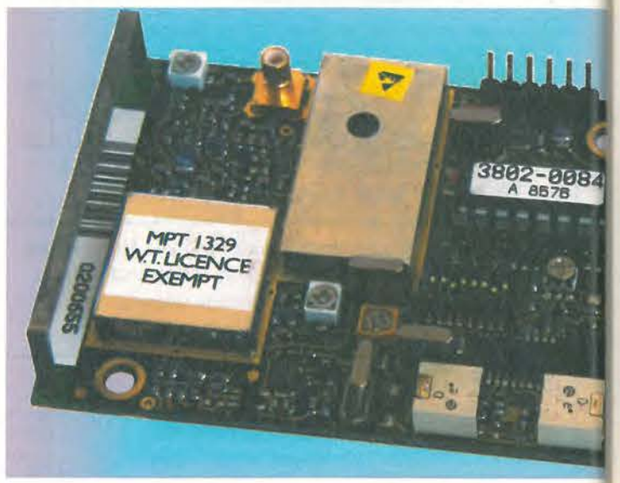

Capable of operating over distances of up to 5km when used with an external antenna, the DTR100 is a fully synthesised data transceiver featuring 64-channel. Its bandwidth is 10kHz and its output is 10mW effective radiated power.

Versions are fully approved to operate without a licence in the UK, Europe, RSA, Scandinavia and Australia. Please specify the country that you want to use the unit in when ordering if other than your address.

The unit's internal antenna gives a range of up to 400m. Multi-channel, narrow-band operation allows you the freedom to select another channel if you experience interference.

Easy to interface, the DTR100 has filtered 5V logic i/o and control lines for direct interfacing to standard microcontrollers like the PIC. It has just six pins, two for the 5V, 95mA maximum supply, two for data i/o one for transmit enable and one for sleep mode.

Measuring 70 by 55 by 17mm high, the DTR10 has adjustable squelch and is supplied with connection details.

Please direct enquiries relating to this offer to Radio-Tech Limited, Overbridge House, Weald Hall Lane, Thornwood Common, Epping, Essex CM16 6NB. Tel +44 (0) 1992 57 6107, fax +44 (0) 1992 56 1994. E-mail addresses are sales@radtec.demon.co.uk
support@radtec.demon.co.uk
also see http://www.radio-tech.co.uk.
Please note that the offer is limited to four units per reader.

Order coupon

Please send me ..... (up to two) pair(s) of TXR DTR100 transceivers at the special discount price of £299.69 fully inclusive UK next-day delivery, or £303.69 Europe registered post, £309.69 ROW.
Country that the transceiver is to be used in.....

Name

Company (if applicable)

Address

Post code

Daytime telephone No

Post this coupon to Radio-Tech Limited, Overbridge House, Weald Hall Lane, Thornwood Common, Epping, Essex CM16 6NB. Tel +44 (0) 1992 57 6107, fax +44 (0) 1992 56 1994 or e-mail sales@radtec.demon.co.uk

Brian Back outlines the benefits of a wireless building management system based on a PIC microcontroller.

Building management using low-power radio

In the relentless drive towards energy efficiency more and more organisations are turning towards radio as the communication medium for their building management services. The popularity of radio comes from the elimination of cabling, reduction in installation cost and the ability to bridge between buildings.

Transceivers such as the *TXR-DTR100* deliver enough transmitted power to provide full coverage in an average sized building. They operate on mid-band uhf, from 433 to 472MHz depending on the country they are being used in. This frequency band provides a good compromise between wall penetration, antenna size and minimising the problems associated with standing waves experienced at higher frequencies.

The key to a good building management system is its ability to collect data in real time, process it and send out control messages, **Fig. 1.** Temperature, followed by humidity, light concentration and power consumption are the most commonly measured parameters in the modern building-management system system.

Temperature is typically measured using calibrated thermistor, PT100 or thermocouple probes. Humidity is detected via dielectric sensors, light with photo cells and power consumption by electricity and gas flow meters. The industry standard output is 0-2V or 4-20mA, representing 0 to 100% for each parameter.

Control signals back from the building management system may be as simple as start or stop relay contact.

Fig. 1. In building management, one central controller communicates with a number of outstations, each with a unique address. An important part of the communications protocol is checking that there are no errors in the data transfer.

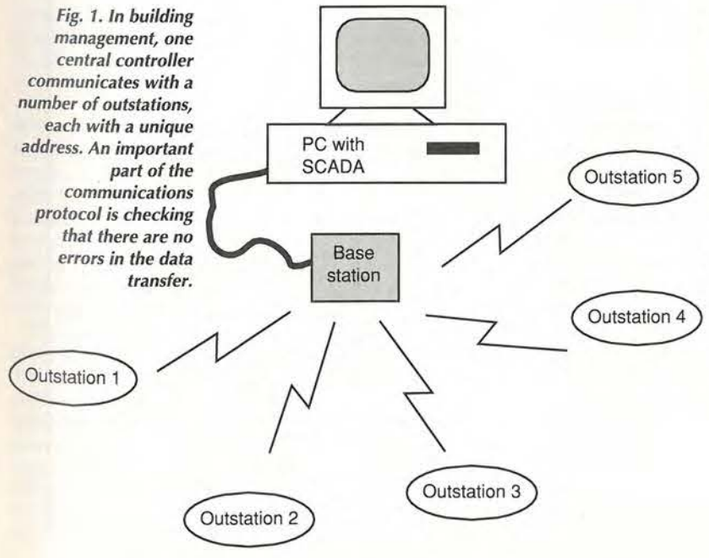

Base station criteria

The building management system base station should typically be able to communicate with each outstation over a

Fig. 2. Outline of software flow at the base station. In building management, polling is normally used since faster, more complex methods are unnecessary. Polling involves the base station communicating, or trying to communicate, with each and every outstation sequentially.

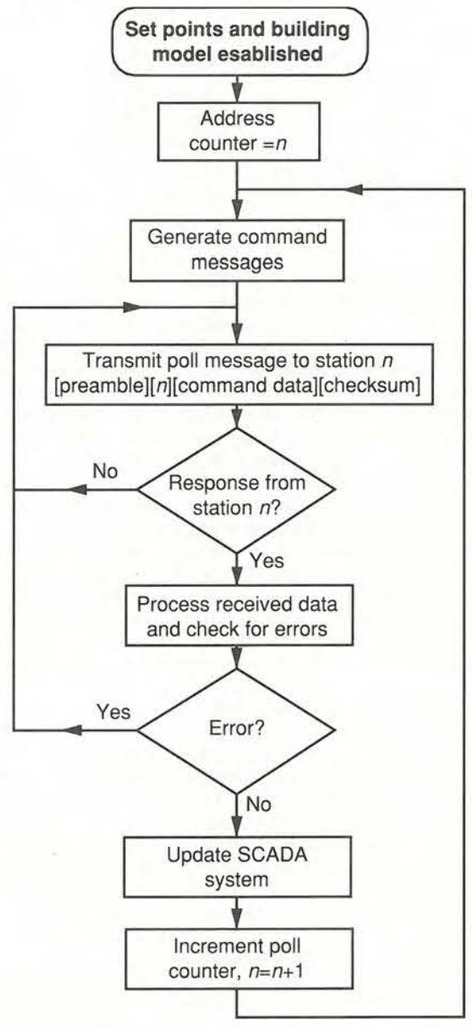

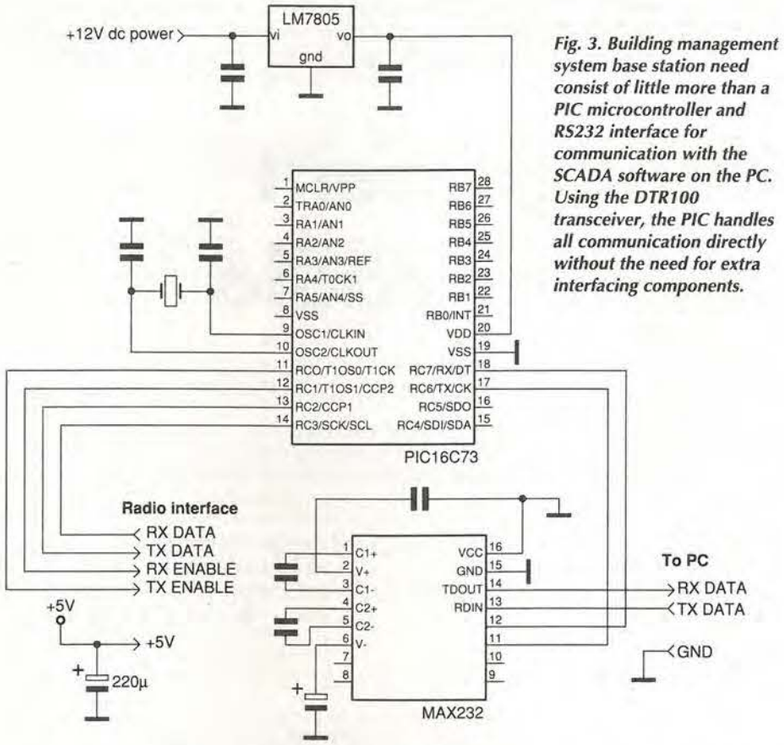

Fig. 3. Building management system base station need consist of little more than a PIC microcontroller and RS232 interface for communication with the SCADA software on the PC. Using the DTR100 transceiver, the PIC handles all communication directly without the need for extra interfacing components.

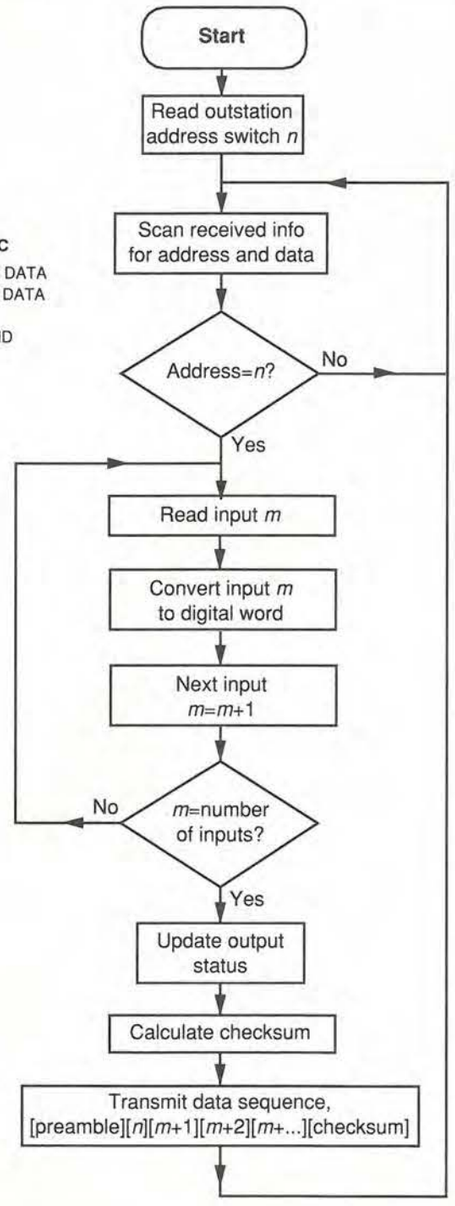

Fig. 4. Outstation operating sequence in outline. Here, on receiving its address, the outstation responds by reading its input data then conveying it to the base station, but the sequence is not critical.

distance of more than 50m in buildings or greater than 400m in free space.

For reliability the system should operate using a polled strategy, with the coordinating controller based upon an industrial pc running a system-control and data acquisition, or SCADA, package. The software is usually written in a high level language such as Visual Basic, **Figs 2,3**.

The SCADA package normally contains a model of the building against which daily set points are programmed. Readings obtained from the outstations are processed and control signals generated. The overall objective is save money. Sorry, I mean to conserve energy of course.

Implementing the outstation

A typical outstation in a building management system will accept five analogue signals and have control over at least two relays, **Fig. 4**. The *TXR-DTR100* combined with the Microchip *PIC16C73* is without doubt an ideal platform for such a building management system.

Interfacing with a wireless transceiver like the DTR100 is simple as it operates using 5V logic levels. The distance and ergonomics of the design will determine whether you use the *DTR100*'s internal antenna or fit an external one.

As the transceiver's receiver section is sensitive down to less than a microvolt, you need to take care to locate it away from the microcontroller's clock and, where applicable, data busses. I also recommend that you use a separate regulated power supply. By following these simple precautions optimum performance will be obtained.

Interfacing signals

The analogue signals can be interfaced to the controllers analogue-to-digital controller via a simple *RC* network comprising 10kΩ and 100nF. This network protects the microcontroller from common mode noise and limited over voltages.

If a current input interface is required this is simply accomplished by connecting a 100Ω precision resistor across the input, converting the 4-20mA current into a 0.4 to 2V span. For added precision over that offered by the PIC's internal 5V reference, an external precision 2.5V reference may connected to the controller's REF(in) input on pin 5.

Where digital signals are required, the PIC's inputs can be reprogrammed to be digital. Alternatively, the analogue inputs can be programmed using a fuzzy logic operating strategy. Digital switching outputs are simply provided via relays.

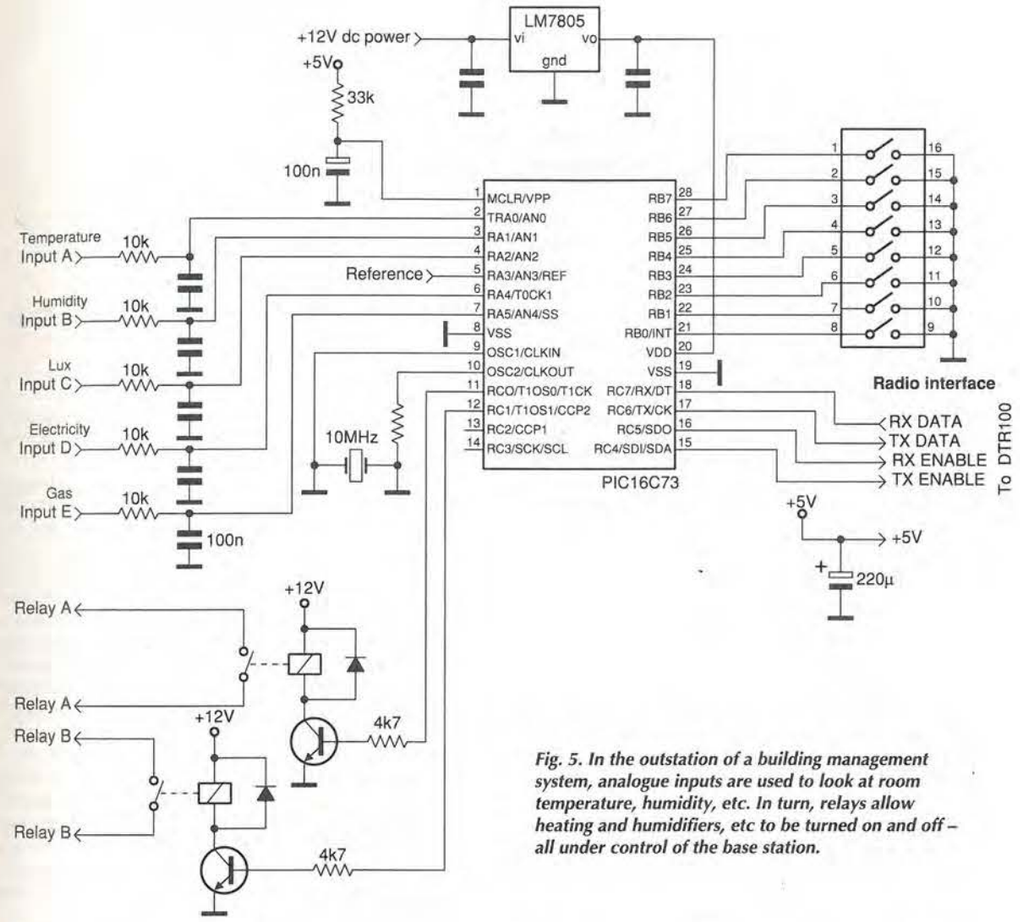

Fig. 5. In the outstation of a building management system, analogue inputs are used to look at room temperature, humidity, etc. In turn, relays allow heating and humidifiers, etc to be turned on and off – all under control of the base station.

Wire-free data communication

Reliable communications by radio requires the use of a protocol which takes into account parameters such as transmitter synthesiser lock time, receiver response time, the need for a preamble, code balancing, pulse width limitations and the open nature of radio as a communication media.

The ideal pulse width for the *DTR100* is between 100 and 300µs. This makes it ideal for Manchester type code sequences, where a 10_2 bit sequence equals logic zero and 01_2 bit sequence represents logic one. Such a sequence comprises a preamble to allow the receiver to synchronise with the transmitter, followed by the receiver's address then the data. Finally, a checksum is included so that the receiver can verify that the data has been received correctly and in some instances, correct the data in the event of a minor error.

Preamble is a symmetrical 10101010101_2 binary sequence with a pulse width equal to the nominal data rate. The duration of the preamble should be the longer of transmitter on to lock time or receiver settling time. For the *DTR100* this period is typically less than 20ms for a hot switch on, i.e. when the receiver is already enabled, or 100ms for a switch on from sleep.

The address usually contains a unique bit sequence identifying the station. The data is normally sent in sequence for each input. Finally the check sum is added to permit the detection of errors. This may simply take the form of a byte equal to the sum of the address plus the data, or calculated in accordance with a published algorithm such as the industry standard CRC16.

The precise outstation operational sequence is not critical, **Fig. 5**. Normally the base station will poll each outstation in sequence, skipping any station that fails to report back.

On receipt of its address, each outstation would scan its inputs, compile and send back the return message.

In summary

The combination of radio with a two way outstation is proving to be a powerful alternative to the conventional data logger and wired building management system. It offers the flexibility of wire-free operation, saves money and time at installation and can cross between buildings.

The *TXR-DTR100* is an example of a UK manufactured radio-data transceiver specifically developed to ease the construction of this type of system world-wide. ■

Understanding capacitors II

Cyril Bateman explains why mica – one of the first capacitor dielectrics – is still in use today, and looks at high-voltage applications, focussing on issues that arise when capacitors are used in conjunction with mains voltages.

Two capacitor constructions, dating from the earliest days of electronics, now provide invaluable service in two differing and essential niche application areas. Mica was originally used to manufacture physically small, close tolerance, low capacitance high-Q parts and trimmers – and it still is.

Paper capacitors – once the universal alternative for values too large for mica – are now restricted to applications involving high alternating voltage at low frequencies. Examples of such uses are power factor correction of the supply mains and safety applications.

Mica's properties

Mica is a transparent rock-forming mineral with perfect basal cleavage. It can be cut into flexible laminates of any desired thickness, using only a sharp blade. India is now the major source of Ruby mica, of the quality needed to make capacitors. As mined, mica has a layered appearance similar to that of natural slate, prior to cleaving to thickness and dressing to size.

Mica will probably be familiar to you as a material for insulating transistors from heatsinks. You can verify its ability to cleave to any desired thickness with a sharp blade. A mica heat-sink insulator can easily be cleaved to less than one tenth its of original thickness, but do use a suitable tool to hold the mica – not your fingers.

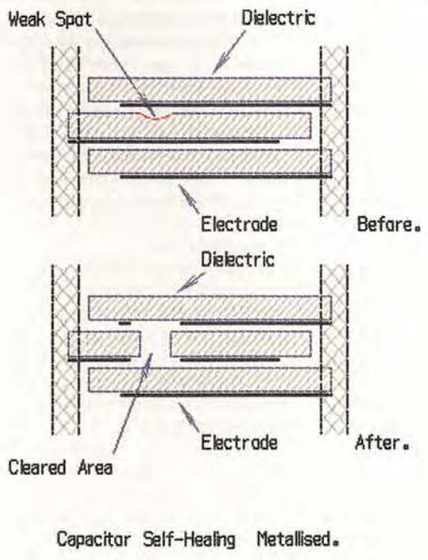

Fig. 1. Metallised-film capacitor section, illustrating self-healing mechanism. Before and after views show that self-healing

Mica retains its insulating and optically transparent properties to very high temperatures. Common non-electronic uses include transparent windows in fires or stoves and the mechanical support and electrical insulation of element wires in toasters, hot air paint strippers and domestic flat-irons.

A variety of modern high-quality capacitor types are now available. To understand why the mica capacitor is still in use, you need to look at its construction. In its basic form, mica has a dielectric constant[1] or 'k' of 5.4 and a tanδ of 0.0003. Both of these figures are almost constant, regardless of frequency. Since mica has a laminated dielectric strength of 200V per micrometre, it is possible to make physically small and high quality capacitors with low inductance.

These qualities alone however would not have ensured mica's survival. Uniquely, the final value of a mica capacitor can be economically adjusted or trimmed during manufacture to tolerances as tight as 0.5pF for values below 50pF, or 0.5% for larger values. This trimmed capacitance retains excellent long term stability, regardless of temperature and applied voltage.

For many years, mica offered the best stability of capacitance over temperature. While the actual claimed temperature-coefficient values vary slightly for smaller capacitance, values above 100pF claim –20 to +50 parts per million per degree celsius. However this quite excellent performance is now bettered – albeit only slightly – by NPO/COG ceramic capacitors. These types offer –30 to +30 ppm, which is the best attainable from any volume produced capacitor.

Mica capacitors exhibit very high Q with frequency and temperature, so are still popular in high voltage rf-transmitter tuned circuits. Easily cleaved to any desired thickness and simply punched to any desired shape, mica can be used to produce custom capacitors shaped to suit almost any available physical space. Being a mineral dielectric, mica capacitors provide high resistance to damage from gamma radiation.

A disadvantage of mica is the cost penalty that results from the manual labour required to select and prepare the base mica dielectric and perform the final capacitance trim. Finished capacitors also exhibit a modest dielectric absorption around 0.3%.

During manufacture, each base mica plate is printed with silver ink electrode patterns. Sufficient pre-printed plates are stacked together to ensure a small excess of capacitance. These stacks are then raised to a temperature sufficient to fire

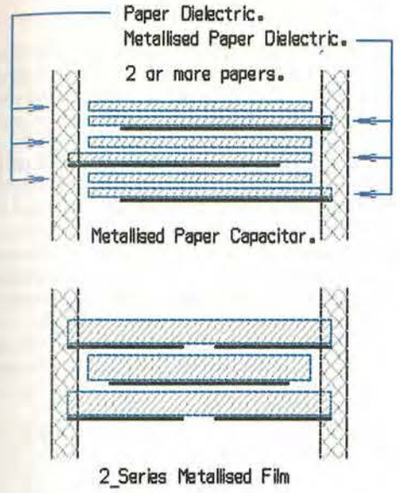

Fig. 2. Comparison of typical constructions used for impregnated metallised paper and Two-Series metallised-film safety capacitors.

the silver ink patterns, resulting in an homogeneous, self supporting laminated structure, capable of withstanding further handling.

Capacitance trimming is performed by air-abrading or otherwise mechanically removing, area from the outermost electrode, which is left exposed, prior to final assembly and encapsulation.

Paper capacitors

For many years, paper capacitors were used for almost all applications not covered by aluminium electrolytic or mica capacitors. Both metallised-paper and foil-paper types were common.

To make a foil and paper element, two or more layers of paper dielectric are interwound with thin metal foil electrodes, using either a rotating split mandrel or spindle. Two or more thicknesses of paper are needed to protect against mechanical damage and breakdown at weak spots.

For general-purpose capacitors, the widths of paper and foil used are adjusted to ensure an insulating edge margin, between these electrodes and the outer edge of the winding. Small thin metal foil tabs used as interconnection between the electrodes and the lead-out wires, are inserted within this element, as it is being wound.

Capacitors intended for high frequency or high current applications can be made by winding with electrode foils sufficiently wide that each foil extends outside one outer winding edge. These capacitors then have only one insulating edge-margin per electrode foil. This construction is called extended foil. Connection to the lead wires is made either by directly soldering to the foils or, when soldering is impossible, by using metal spray techniques.

Two pre-metallised paper dielectrics with suitable edge margins provided by masking during the vacuum metallising process can be interwound to make a metallised paper capacitor. Common metallising techniques use very thin layers either of zinc or aluminium, evaporated under vacuum at high temperature.

Metallised paper capacitors can be wound using only a single paper thickness between electrodes. By applying an excess voltage, the very thin, resistive, metallised electrode

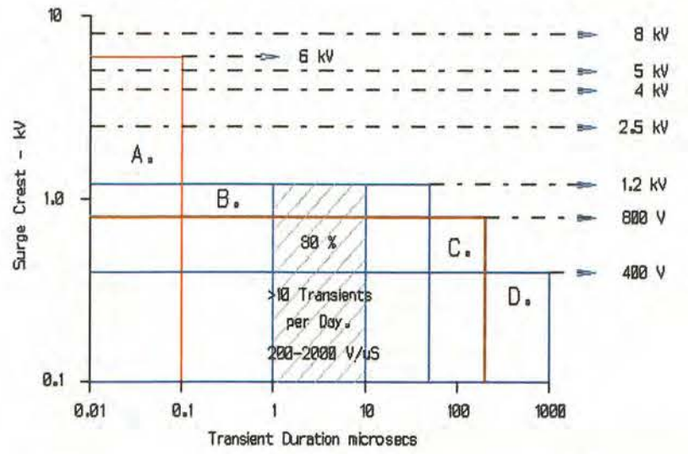

Fig. 3. Graphical results of a European wide investigation into 230V ac power line transients.

can be evaporated away from any weak areas of the insulating paper. This process is called clearing, or self healing, **Fig. 1**. More on this topic later.

Paper capacitor constructions

To keep the finished size of the capacitor small, a metallised winding wound on a suitably large diameter spindle can be flattened. A metal end-spray is used to allow the lead-out wires to be attached either by soldering or using electrical resistance welding methods.

Both metallised-paper and foil-paper windings can then be completed by impregnating under high vacuum. Many different impregnants have been used, ranging from petroleum jelly, waxes and mineral and vegetable oils to synthetic resins and varnishes.

Occasionally, a thin polyester plastic film was interwound with the paper. The paper of this composite element being impregnated. Called 'mixed dielectric', it provided either a higher voltage DC working capacitor or a larger capacitance for the same size, than impregnated paper. Mixed dielectric capacitors were once especially popular for high voltage dc blocking duties between anodes and grids of adjacent valve stages, but this construction is now obsolete.

Up to the seventies, ac applications frequently used a flattened metallised paper element with an impregnant derived from polychlorinated biphenyls, commonly called PCB. Having a high 'k' value and excellent ac characteristics, it provided a small but high performance capacitor. At one time this construction was used almost universally within fluorescent electric lights, to correct their power factor.

But PCBs were hazardous. If the capacitor was not hermetically sealed, the impregnant could leak. This was particularly expensive if the leakage came from overhead lighting. A further problem is that PCBs are not bio-degradable. Consequently, the use of PCBs in small capacitors was outlawed in the early seventies, being replaced by specially developed '2-series wound', metallised polypropylene capacitors, **Fig. 2**.

Fig. 4. Capacitor cross-section illustrating the three main capacitor locations where, due to entrapped air pockets, ionisation discharges are most likely to occur.

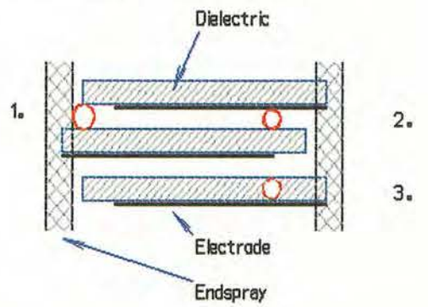

What are X and Y capacitors?

The most common safety requirement in modern electronic equipment relates to capacitors that connect directly to the domestic ac mains supply. This application pre-

sents two distinct safety hazards, both having been confirmed by unfortunate practical experiences. One is capacitors catching fire. The other is equipment operators receiving dangerous electric shocks.

For 230V ac supplies, two main safety specifications are imposed, one when the capacitor is connected between supply live and neutral, and the other when it is connected between supply live to equipment earth. Use of capacitors that have been approved to the relevant specification is mandatory for both applications.

When connected between live and neutral of the mains supply – known as a class X application – a capacitor is subjected not only to the supply voltage excursions but also to any repetitive superimposed spikes and transients. Both occur frequently on the mains supply.

Any capacitor that fails while connected across a 230V ac supply is a potential fire hazard. Capacitor current passing from live to neutral of the supply does not present a shock hazard to life, so no maximum current levels are imposed. This means that the capacitance value is not restricted.

When connected between live and earth of the mains supply – known as a class Y operation – the capacitor is again subject to the same superimposed spikes and transients stresses and hazards. More importantly, all current flowing through the capacitor now flows to the equipment's earth wiring and metalwork. Because of this, excessive capacitance and any capacitor short-circuit failure become a distinct hazard to life should the equipment's earth connection to the mains supply earth fail.

As a consequence of the potential hazards, strict earth leakage current limits have been imposed for class Y applications.

Inside paper capacitors

The original paper capacitors were always made using foil electrodes interwound with very thin separating tissue papers, by winding together onto a mandrel or spindle. When the capacitor element winding was completed, it was impregnated with oils or wax under high vacuum, **Fig. A**.

Two different constructions were used. For general purpose applications the electrode foils were narrower than the paper separator, providing insulating 'edge-margins' at both edges of the winding. Foil tabs were inserted to permit connection to lead-wires, **Fig. B**.

For high-frequency or high-current applications, the electrode foils were similar in width to the paper tissues but were aligned with an offset either side of the papers, such that each electrode extended outside one edge only of the capacitor winding. This provided an insulating edge-margin at the opposite edge of the capacitor winding. Connection to the lead-wires was by soldering or metal end-spray. Naturally this winding method became called 'extended foil'.

While the electrode foils used were extremely thin, soft and flexible, to guard against paper weak spots or mechanical damage during winding resulting in a short circuited capacitor, as a minimum two thicknesses of paper were invariably used, Fig. B.

During World War 2, to maximise the capacitance available in a given capacitor size, the technique of substituting thin layers of vacuum deposited metal in place of metal foil electrodes was developed. A metal end-spray technique was used to permit lead-wire attachment. This metallised paper capacitor construction was first introduced by A H Hunt capacitors in 1945.

This dramatic size reduction was made possible firstly by reduction of electrode thickness from the 5 micron of aluminium foil to the 25 milli-micron thickness of the evaporated metallising.

Even more significant was the use of a single paper thickness now permitted by the development of the 'self-healing' metallised capacitor, **Fig. C**.

This 'self-healing' ability of metallised paper capacitors permitted a further size reduction by winding on a larger diameter spindle, then flattening the winding. Connection was made by metal end-spray, suitably masked to permit impregnant to permeate the winding, see **Fig. D.**

Many different impregnants have been used, as explained in the main text. Regardless of impregnant used, all paper capacitors shared the one name, even though the 'k' value of impregnants used ranged from 2.5 to 6.

As a dielectric without an impregnant, capacitor tissue paper, being largely composed of air, has a dielectric constant 'k' of around 1.5.

With capacitors which are impregnated, the paper acts to separate the electrodes during winding, then as a wick to absorb the impregnating fluid, and controls the dielectric thickness. This fluid is the true dielectric, not the paper.

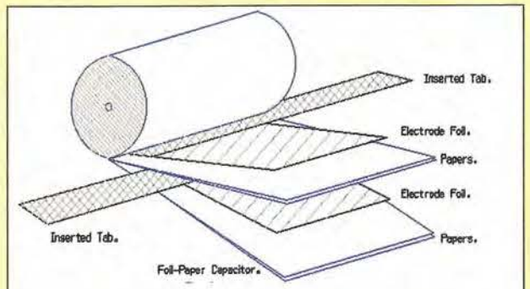

Fig. A. Above, winding operation for a conventional foil-paper capacitor element using inserted tabs Fig. B Right top, cross sections comparing different winding arrangements used for inserted tab foil-paper and extended foil-paper element capacitors, bottom right.

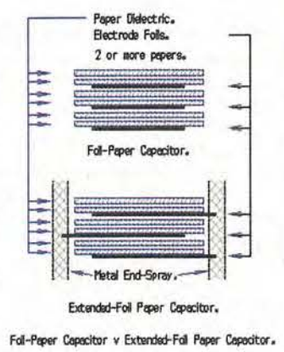

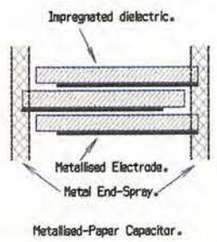

Fig. C. Cross section of a typical metallised paper capacitor element.

Fig. D. Stages in making a "flattened " capacitor. The original metallised paper element (left) is wound using a larger than normal spindle diameter, in order to facilitate flattening to the finished shape (right).

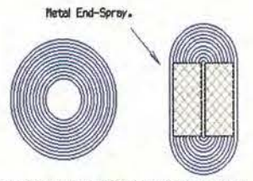

The leakage value depends on whether the equipment is classed as portable or is hard-wired to the mains supply. As a result, the maximum permitted capacitance values that can be used for class Y application are strictly limited.

Capacitor hazard modes

Why should the domestic 230V mains supply pose such specific capacitor problems as to require these severe legislations?

With 230V ac supplies, two capacitor damaging hazards can occur. One is continuous – ionisation discharge current – the other is sporadic – spikes and transient[2] voltages. Either hazard can result in dramatic capacitor failure.

Since unlimited power is available from the supply, relative to that sustainable by a small capacitor, failure can result in a capacitor exploding or catching fire, **Fig. 3**.

Ionisation discharges

Imagine a series combination of two capacitors, of 10:1 value ratio, subjected to an alternating signal. The smaller capacitance value sustains 91% of the applied voltage while the larger value is subject only to the remaining 9%.

With capacitors manufactured by winding together dielectric and electrode foils – especially those subsequently flattened to reduce the final volume – it is obvious that entrapped air pockets will occur. The dielectric constant, or 'k', of air is several times smaller than that of any capacitor dielectric used, so any entrapped air pocket, presents a much smaller capacitance than would the same size of dielectric.

As a result, two series capacitors whose values depend on the dielectric used and the air pocket size are formed. In practice, the resulting voltage sharing will vary, but as a worst case, for safety, you must assume that any air pocket may be subjected to the full ac voltage applied to the capacitor.

Other names are sometimes used to describe the ionisation process, such as scintillation and corona. For the purpose of this article, ionisation describes a voltage dependant discharge inside the capacitor's structure. I prefer to use the term corona when applied to discharges external to the capacitor. Both discharge mechanisms have specific individual signatures[3] when viewed on a discharge detector screen.

Any air in an air pocket inside the capacitor starts to ionise at a voltage that depends on the pocket size, its shape and its internal air pressure. This ionisation inception voltage is related to the peak voltage appearing across the air pocket – not the rms value. Inception and extinction voltages increase[4] for very small or low pressure pockets and for very large or high pressure pockets, **Fig. 5**.

Given a suitable intermediate pocket size, internal air pressure and enclosed water vapour content, ionisation can occur as low as 280V peak. Making due allowance for the permitted mains supply voltage variation, this means that in practice, a nominal ac rms mains supply of 185V or above could induce ionisation of any internal air pocket in the capacitor.

Consequently, where 230V ac supplies are concerned, total freedom from air-pocket ionisation needs to be assured, possibly by impregnating the capacitor winding under vacuum. Any non-series wound conventional capacitor with no impregnation can be expected to ionise when connected across the 230 volt mains supply.

As an alternative to impregnation, some makers arrange their metallising patterns so as to deliberately create a series combination of two or more capacitors. These series elements share the applied ac voltage. Assuming two equal capacitances, this effectively doubling the series capacitor's ionisation inception voltage, **Fig. 2**.

Does capacitor ionisation matter?

Once the air in a pocket has ionised, discharge current flow is self sustaining at much lower voltages, until the applied voltage falls below the air pocket's extinction voltage. If the applied voltage far exceeds the inception voltage, these discharges can become almost continuous.

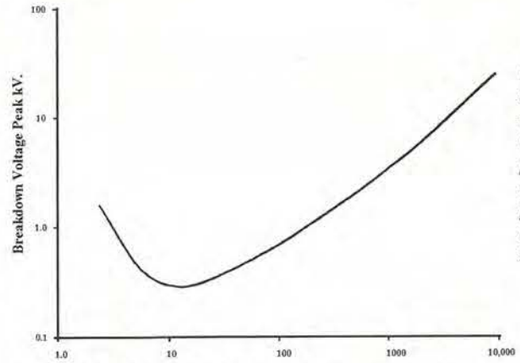

Fig. 5. Variation of breakdown voltage with variation of air pocket size, enclosed air pressure and density relative to 20°C.

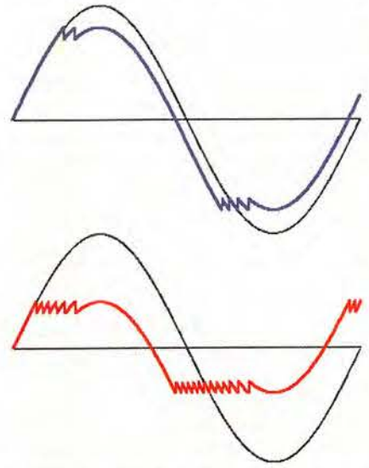

Fig. 6. Simplified oscilloscope display of frequency of ionisation discharge pulses with change of applied voltage relative to Inception voltage for a partial void in a capacitor dielectric.

Viewed on an oscilloscope, the voltage sustainable across an air pocket rises until its ionisation inception voltage is attained when air in this pocket ionises. The resulting current flow instantaneously renders this air pocket a short circuit[4], and continues to do so until the sustaining voltage falls below the pocket's extinction voltage.

Charge, discharge cycles continue until the applied voltage falls below the air pocket's extinction voltage, **Fig. 6**.

Discharge current flowing in ionised air generates intense localised heating of the dielectric. The active gases O_3 and NO_2 generated by the discharge chemically degrade the dielectric.[4] Thus ionisation discharge is doubly damaging to almost all dielectric materials. If prolonged, it results in capacitor failure and generally with a short circuit.

The above discussion has centred only on ionisation occurring with alternating voltage stress. Ionisation occurring in the presence of dc voltages can also be detected[5]. With small capacitors however, the dc inception voltages are generally higher than when stressed with ac.

Effects of voltage spikes

Earlier, I mentioned spikes and transients. A European study by Unipede classified four categories of transients found on the mains supply lines.[2] The chosen categories, **Fig. 3**, were,

- lightning
- grid network failures and flashovers
- switching on or off motors
- pulses from thyristors, triacs, welding, etc.

At 100ns by 6kV, the largest amplitude shortest pulse results

from atmospheric lightning. This is labelled 'A'. The most common 80% of all pulses, labelled as 'B', occurs more than ten times a day and is 60µs by 1.2kV. This one results from grid network failures or flashovers.

Equipment switching on or off, labelled as 'C', accounts for a 200µs by 800V pulse. The slowest transient found, labelled 'D', comes from welding machinery, thyristors, triacs and the like, generated a 1000µs by 400V pulse.

While these levels of transient voltages will initiate ionisation discharges in most capacitors, they are spasmodic by nature so the resultant ionisation damage will only develop slowly, over a period of time. Of almost immediate effect is damage that can result from repetitive self-healing.

European Community EN132400 specification was introduced to cover capacitors used for rfi suppression used on 230V ac mains supplies. It involves subjecting class X2 designated capacitors to 2.5kV and class Y2 to 5kV impulse tests. These new tests were not included in previous specification requirements.

Classes X2 and Y2

Having mentioned class X2 and class Y2, just what do they mean? The EN132400 specification provides for the two application categories mentioned earlier. X-rated capacitors are for use in positions where a capacitor failure does not expose one to danger of electric shock - in practise across live and neutral.

The X-capacitor's category provides for three service levels. Class X1 is the most stringent, where pulse voltages in service can exceed 2.5kV peak. Class X2 is for general purposes where pulse voltages do not exceed 2.5kV peak and class X3 is for pulse voltages less than 1.2kV. To date however, the X3 category has no equipment category approved for end use.

Detecting capacitor ionisation

Historically, ionisation has been detected using many techniques, audible, visual and electronic, with the discharge magnitude measured in picocoulombs.

We have all heard a hissing sound and on a dark night have seen blue glow discharges near high voltage overhead ac mains transmission cable insulators. In a similar fashion, experienced observers in a quiet room are able to audibly detect surface ionisation levels above 40pC.

In a darkened room, a dark adapted observer can visually detect internal discharges down to 10-15pC – even through several millimetres of unpigmented polythene[4].

Regardless of whether the discharge is occurring internally or externally, more consistent measurement results can be obtained using simple bridge techniques. One early example of this method was the ERA *Model 3* discharge detector.

The *Model 3* was frequently used to test cables, busbars and motors as well as capacitors. This detector supplies a monitoring calibration pulse, which can be attenuated to estimate the level of capacitor discharges observed.

But the equipment is far from portable. Each component, lead wire and connection used must be ionisation free at working voltages, requiring a large floor standing power supply weighing some 150kg, with a benchtop display of 60kg.

When used to detect ionisation in capacitors, a centre tapped transformer and a second ionisation free capacitor of similar value are arranged to negate both capacitors' ac currents, while extracting the test capacitors ionisation discharge currents for display, **Fig. 7**.

In essence, this detector is band limited to detect over the frequency range 15kHz to 150kHz. Discharges occurring within this frequency band are displayed on an elliptic clockwise rotating oscilloscope trace together with an adjustable calibration pulse.

The trace is generally arranged with the zero crossings represented at extremes of the horizontal axis, positive and negative peaks being at the top and bottom of the display. However, this elliptical display and its calibration pulses can be separately controlled and rotated about the axis as desired.

According to work originated by Paschen, the voltage at which ionisation inception occurs is related to the peak voltage appearing across the air pocket, not its rms value. This inception voltage depends on a combination of void size and shape, enclosed gas pressure and the relative density, water vapour level and temperature of the enclosed gas. Inception and extinction voltages[4] increase rapidly for very small or low pressure pockets and more slowly for very large or high pressure pockets, Fig. 5.

With the test voltage of the detector adjusted to slightly exceed the capacitor's ionisation inception voltage, discharges at this inception voltage commence near the peak of this voltage and continue to display clockwise until their lower extinction voltage level is reached. With optimum voltage adjustment, a single discharge pulse will be observed, **Fig. 8**.

For a specific air void, the amplitude of ionisation discharge current pulses is relatively constant regardless of the actual applied voltage. However discharge pulse count increases rapidly with applied voltage increase above the inception voltage, **Fig. 6.**

Consequently, with further increase of applied voltage, pulses occur both pre and post this actual peak voltage, only ceasing when the applied voltage falls below the air pockets extinction level, **Fig. 9**.

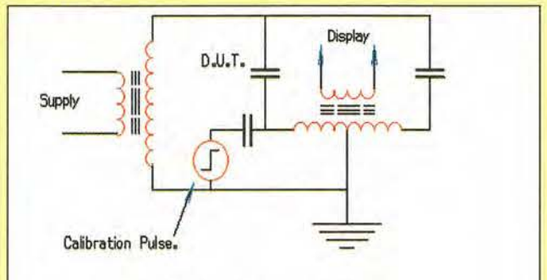

Ionisation Detector - Capacitors.

Fig. 7. Simplified circuit diagram of ERA Model 3 discharge detector used to test capacitors.

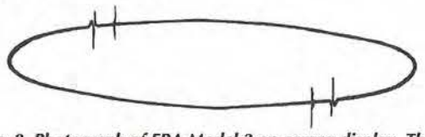

Fig. 8. Photograph of ERA Model 3 on-screen display. The test voltage slightly exceeds the capacitor's discharge inception voltage. Display shows a single ionisation discharge pulse, immediately preceded by the calibration pulse.

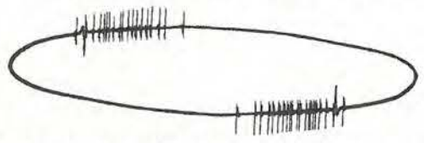

Fig. 9. Photograph of ERA Model 3 on-screen results. The test voltage considerably exceeded the capacitor's discharge inception voltage. Display shows multiple ionisation discharge pulses, surrounding a calibration pulse. Note discharge pulse amplitude is relatively unchanged by this change of applied voltage, but pulse count has increased.

Major approval tests summarised

EN132400, IEC384-14 second edition and CECC32400 – equivalent tests.

The most important capacitor tests in EN132400 are active flammability and endurance. Active flammability replicates the capacitor's end use by applying its rated ac voltage, during which 20 pulses are randomly introduced on the voltage across the capacitor. The peak voltage is equal to the impulse voltage that defines the subclasses of X and Y capacitors. The capacitor must not burn with a flame.

The impulse voltage has a 1.2/50µs wave shape and is similar to the standard lightning impulse wave shape. It rises to its peak voltage in 1.2µs, then decays rather more slowly, to 50% amplitude in the following 50µs.

The endurance test is preceded by a maximum of 24 of these impulse voltages, each pulse being monitored. If three successive impulses indicate no self healing, no further pulses are applied. If all 24 impulses have been applied and more than three indicate no self healing, the capacitor has passed this pre-conditioning test.

Following the impulse test, the same capacitors are subjected to 1000 hours endurance at maximum rated temperature and accelerated voltages, 1.7 times for Y, 1.25 times the rated for X. During this 1000 hours, the test voltage is increased to 1000V ac for a tenth of a second each hour. Finally the capacitors are subjected to a voltage proof test and their parameters re-measured. Any changes must be within permitted limits.

The above descriptions are outlines only. Designers having a particular interest should consult the specifications for full details.

Class X capacitor test parameters.

Sub-class	Peak pulse voltage in operation	IEC-664 installation category	Application	Peak impulse voltage *Vp* applied before endurance test	
				For C≤1µF	For C>1µF
X1	>2.5kV≤4kV	III	High pulse application	*Vp*=4.0kV	$V_p = \frac{4.0}{\sqrt{C}}$kV
X2	≤2.5kV	II	General purpose	*Vp*=2.5kV	$V_p = \frac{2.5}{\sqrt{C}}$kV
X3	≤1.2kV	–	General purpose	No test	No test

Class Y capacitor test parameters.

Sub-class	Type of bridged insulation	Rated ac voltage	Peak impulse voltage V_p applied before endurance test
Y1	Double or reinforced	≤250V	8.0kV
Y2	Basic or supplementary	≥150, ≤250V	5.0kV
Y3	Basic or supplementary	≥150, ≤250V	No test
Y4	Basic or supplementary	<150V	2.5kV

Class Y2 is for normal use and mains voltages to 250V. Following an approval similar to the old SEV, these will have been impulse tested to 5kV.

Classes Y3 for 250V AC and class Y4 for 150V AC have no equipment category approved for end use, at present.

The above descriptions of approval tests and categories have been simplified and abbreviated, and suffice only to identify an application. Designers having a particular need or interest should consult the specification for full details.

Safety capacitor types

Various capacitor styles and dielectrics have been evaluated for use as safety capacitors, some suitable for both class X and class Y, others suitable for only one or other class use. The longest established dielectric, approved for both applications, is resin impregnated metallised paper. Originally, these were only available from Rifa[6], but now similar approved constructions are available from other manufacturers, **Fig. 2**.

Metallisation offers the possibility for the dielectric to undergo self-healing when subject to the voltage impulse tests. The occurrence of self-healing can be reduced or avoided by suitably increasing dielectric thickness, with a consequent increase in capacitor size and cost. In practice, for use on class X or class Y applications, to negate the occurrence of any weakened areas in the metallised dielectric papers, second non-metallised[6] paper can be interwound.

Self-healing is a process in which weaker areas of the dielectric temporarily break down. The subsequent local current flow vapourises the metallised electrodes surrounding these weak areas, effectively permanently removing the weakness from further exposure to voltage. Hence unlike ionisation, self healing is a one off or infrequent, event. To facilitate this process, the electrodes can be deliberately metallised using segmented patterns, more easily isolated during self-healing, Fig. 1.

While self healing is a protective mechanism, inevitably each occurrence results in some loss of electrode area, and hence capacitance. If losses are excessive this can lead to the capacitor failing the EN132400 approval tests.

One of the first alternative Y styles was based on the use of high-voltage ceramic-disc capacitor construction. While the restricted capacitance values permitted for class Y were attainable, the larger values used for class X were not.

Ceramic-disc capacitors approved for class Y use can be low cost and physically small. Having effectively a sintered, solid, void-free dielectric, they are inherently free from internal ionisation.

One potential disadvantage for ceramics is their temperature coefficient, which generally exceeds that of metallised paper or film capacitors. Since the permissible earth leakage current is constrained across the equipment's operating temperature, class Y ceramic permissible nominal capacitance may be less than for paper or film capacitors.

Being physically smaller, the intrinsic self inductance of

ceramic capacitors can also be less. This means that the ceramic capacitor has an extended frequency range, enhancing its emc attenuation properties.

In June 1997, Murata announced that it had developed a multilayer ceramic-chip capacitor suitable for both classes[7], providing 33nF at 250V ac for class X and 4.7nF 250V ac for class Y. It has approvals from UL, VDE, SEV and SEMKO.

One important selection criterion for capacitors which are subject to repetitive self-healing is the amount of free carbon remaining following a self healing process. Increased levels of carbon residue accelerate the probability that self-healing discharges can result in a short circuited capacitor.

At 10%, impregnated paper offers the lowest percentage of carbon residue.[6] It is followed by polyester at 30%, polypropylene with 45% then polycarbonate at 65%. Consequently, the best wound capacitors for class X and class Y are constructed either from paper or polyester dielectric.

Removing thermostat clicks

One special variation of the class X capacitors incorporates a built in series resistance, forming a series *CR* network in one package. This format is extremely effective in removing radiated switching clicks from thermostat and similar intermittent switch contacts.

Other makers offer various constructions based on metallised plastic dielectrics,[8] which also claim EN132400 approvals. Having been personally involved in the development and marketing of the original two-series metallised polypropylene capacitors manufactured in the UK,[9] this style for me still retains a certain appeal, Fig. 2.

In summary

Regardless of differences in construction and supplier, whenever capacitors are directly connected to the 230V ac mains supply, it is necessary to use only approved capacitors within their correct designated approved category.

Over the years I must confess to designing in, or approving, more applications based on the resin impregnated metallised paper approach, than all other types. This construction remains my personal first choice for 230V ac mains safety applications.

In my next article, I plan to explore the family of ceramic capacitors. This embraces many differing construction methods combined with many permutations of dielectric performance. ■

References

1. Reference Data for Radio Engineers, Pub. Newnes, Oxford.
2. Union of Producers and Distributors of Electric Energy, 28 rue Jacques IBERT, Paris.
3. Recognition of Discharges, Cigré Working Group 21.03.
4. Mason, JH, *Proc. IEE*, Vol. 112 July 1965.
5. Parkman, N, 'Problems in Highly Stressed Insulation,' *Electrotechnics* No 29.
6. Capacitors for RFI Suppression, http://www.rifa.se
7. GHM3000 data sheet, Murata Manufacturing Co Ltd.
8. EMI Suppression Capacitors, CD-rom-based data book from Siemens Matsushita Components.
9. Electronic Components Catalogue 1974, Erie Electronics Ltd.

NOW AVAILABLE

RANGER 2 for Windows 95™

The Complete, Integrated Schematic & PCB Layout Package

Windows Ranger 2 £250
For Windows 95 & NT
- New Hierarchical Circuit
- Split Devices • Gate & Pin Swap
- New Edit Devices in Circuit
- Copper Fill • Power Planes
- Autorouter • Back Annotation

Ranger 2 Outputs:
Full Windows Outputs
Plus - HP-GL
Gerber
NC Drill
AutoCad DXF

Windows Ranger 2 with Specctra SP2 £500
Ranger & Specctra Autorouter provide the most cost effective PCB Design system available. A powerful, intuitive system at an outstanding price!

Windows Ranger 2 Upgrade £150
Upgrade your existing PCB Package to Windows Ranger 2.
Demo disc available £5.00 (Prices exc VAT/P&P)

Call 01730 260062
Fax 01705 599036 Old Buriton Limeworks, Kiln Lane, Buriton, Petersfield, Hants. GU31 5SJ

CIRCLE NO. 122 ON REPLY CARD
SEETRAX CAE
Advanced Systems & Technology for PCB Manufacture

SPEAKERS' CORNER

John Watkinson looks at magnetism and explains why some loudspeakers will pull your tv picture and others won't.

Most loudspeakers rely on permanent magnets and good design requires more than acquaintance with the principles.

A magnetic field can be created by passing a current through a solenoid, which is no more than a coil of wire. This is exactly what was used in early loudspeakers. When the current ceases, the magnetism disappears.

But many materials – some quite common – display a permanent magnetic field with no apparent power source. Magnetism of this kind results from the orbiting of electrons within atoms. Different orbits can hold a different number of electrons. The distribution of electrons determines whether the element is diamagnetic, i.e. non-magnetic, or paramagnetic, which means that magnetic characteristics are possible.

Diamagnetic materials have an even number of electrons in each orbit, where half of them spin in each direction cancelling any resultant magnetic moment. Fortunately the transition elements have an odd number of electrons in certain orbits and the magnetic moment due to electronic spin is not cancelled out. In ferromagnetic materials such as iron, cobalt or nickel, the resultant electron spins can be aligned and the most powerful magnetic behaviour is obtained.

It is not immediately clear how a material in which electron spins are parallel could ever exist in an unmagnetised state or how it could be partially magnetised by a relatively small external field. The theory of magnetic domains has been developed to explain it. **Figure 1a)** shows a ferromagnetic bar which is demagnetised. It has no net magnetic moment because it is divided into domains or volumes which have equal and opposite moments. Ferromagnetic material divides into domains in order to reduce its magnetostatic energy. Within a domain wall, which is around 0.1μm thick, the axis of spin gradually rotates from one state to another.

An external field is capable of disturbing the equilibrium of the domain wall by favouring one axis of spin over the other. The result is that the domain wall moves and one domain becomes larger at the expense of another. In this way the net magnetic moment of the bar is no longer zero as shown in **b)**.

For small distances, the domain wall motion is linear and reversible if the change in the applied field is reversed. However, larger movements are irreversible because heat is dissipated as the wall jumps to reduce its energy. Following such a domain wall jump, the material remains magnetised after the external field is removed and an opposing external field must be applied which must do further work to bring the domain wall back again.

This is a process of hysteresis where work must be done to move each way. Were it not for this non-linear mechanism permanent magnets would not exist and this short article would be a lot shorter.

Figure 2 shows a hysteresis loop which is obtained by plotting the magnetization B when the external field H is swept to and fro. On the macroscopic scale, the loop appears to be a smooth curve, whereas on a small scale it is in fact composed of a large number of small jumps. These were first discovered by Barkhausen.

Starting from the unmagnetized state at the origin, as an external field is applied, the response is initially linear and the slope is given by the susceptibility. As the applied field is increased a point is reached where the magnetisation ceases to increase. This is the saturation magnetisation B_s.

If the applied field is removed, the magnetisation falls, not to zero, but the the remanent magnetisation B_r which makes permanent magnets possible. The ratio of B_r to B_s

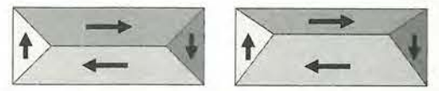

Fig. 1. In a), left, the ferromagnetic bar has no net magnetic moment since all its domains are equal and thus cancel. This is not the case in b) on the right.

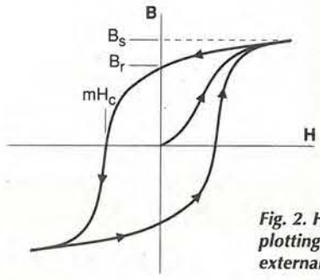

Fig. 2. Hysteresis loop obtained by plotting magnetisation, B, against externalk field H, which is swept.

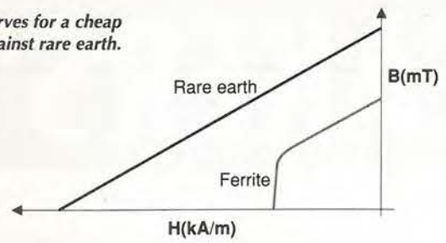

Fig. 3. Demagnetisation curves for a cheap ferrite against rare earth.

is called the squareness ratio. In magnets squareness is beneficial as it increases the remanent magnetization.

If an increasing external field is applied in the opposite direction, the curve continues to the point where the magnetization is zero. The field required to achieve this is called the intrinsic coercive force *mHc*. This corner of the hysteresis curve is the most important area for permanent magnets and is known as the demagnetisation curve.

Figure 3 shows demagnetisation curves for a cheap ferrite material and for more useful rare earth. Top right of the curve is the short circuit flux/unit area which would be available if a mythical zero reluctance material bridged the poles. Bottom left is the open-circuit MMF/unit length which would be available if the magnet were immersed in a hypothetical magnetic insulator. There is a lot of similarity here with an electrical cell having an internal resistance.

Maximum power transfer VI_{max} is when the load and internal resistances are equal. In a magnetic circuit the greatest efficiency BH_{max} is where the external reluctance matches the internal reluctance. Working at some other point requires a larger and more expensive magnet.

Load reluctance and air gap

The external or load reluctance is dominated by that of the air gap where the coil operates. In a practical magnet, not all of the available flux passes through the air gap because the air in the gap doesn't differ from the air elsewhere around the magnet. The flux is happy to take a shorter route home via a leakage path.

Cheap ferrite has such a poor B_r that a large area magnet is needed. This has to go outside the coil, creating a large leakage area. Consequently ferrite loudspeakers stick to anything ferrous nearby and distort the picture on cathode-ray tubes.

Serious designers use a high-energy magnetic material such as neodymium-iron-boron. In this case a small cross section magnet is needed, which will fit inside the coil. This has a shorter perimeter and less leakage. Thus although rare earth magnets are more expensive, the cost is offset by the fact that in a practical design more of the flux goes through the gap.

Unless a rare earth magnet design is very bad, no screening for stray flux is needed at all. ■

John Watkinson, FAES

Control Essentials *from Milford Instruments*

BASIC Stamps - low cost alternative to PLCs

BASIC Stamps are small, low cost re-programmable controllers running easy-to-programme BASIC. They can source/sink up to 20mA and support buttons/keypads/LCDs/LEDs/Comms/Serial Driver Chips etc. Once programmed from the PC, Stamps are fully autonomous and will find many uses in ATE equipment, one-offs and as an alternative to expensive PLCs.

BS1-IC £25

BS2-IC £39

BS1-IC
8 I/O lines
Up to 80 programme lines
2,000 lines/sec
Comms to 2,400 baud

BS2-IC
16 I/O lines
Up to 500 programme lines
SPI, DTMF etc
Comms to 19,200 baud

Development kits from £79 which include application notes, software, cable and Stamp.

Serial LCD Modules - banish lcd hassle

£35

£85

£125

Three quality, backlit LCD modules each fitted with an easy-to-use serial driver board. Simple 3-wire interface to PC, micro or Stamp (+5vdc, Gnd and signal). Enhanced driver board supports full-screen height numerals, standard characters and software switchable backlight. RS232 interface at 2,400 or 9,600 baud.
Standard driver boards (without lcd) and bulk driver chips for OEM use also available.

Data Logging

BS2-IC based Data collection board with real-time clock/calendar, up to 32kBytes EEprom, dual 12-bit ADC and user development area. Kit complete with extensive manual and ready-to-go software routines that may be user customised. **£65**

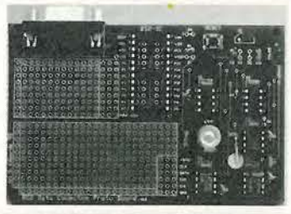

Serial Maths Processors

Number crunching? Let our serial maths processors take the strain-
● 32-bit floating point ● SPI (3-wire) interface
● Multiply, divide, add, subtract, sine, log, square-root, ● 32-programmable counter,
£20 ● 4-channel ADCs

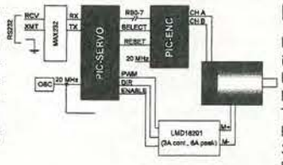

DC Servo Control

DC Motor control chipset for use with incremental encoders.
RS232/RS485 interface capability,
Positional control,Velocity control and Trapezoidal profiling,
Programmable P.I.D filter
32-bit position, velocity and acceleration
Evaluation board available. **£29**

All prices exclude shipping and VAT

www.milinst.demon.co.uk

To order or request further information, please call Milford Instruments at 01977 683665, fax 681465

CIRCLE NO. 123 ON REPLY CARD

Dictionary of Communications Technology

With over 9000 entries and 250 illustrations, this book is an invaluable reference work for anyone involved with electronics and communications.

Dictionary of Communications Technology provides comprehensive coverage of data and communications and has entries on PC lans, the Internet, communications testing and client-server applications – in 500 pages.

Over 20 major companies helped prepare the Dictionary of Communications Technology, including AT&T, IBM and Digital Equipment Corporation.

Gilbert Held, author of Dictionary of Communications Technology, is an internationally respected author who has used his enormous expertise to make this work one of the most comprehensive sources of telecommunications information.

Please mail this coupon to *Electronics World*, together with payment. Alternatively fax credit card details with order on **0181 652 8111.** You can also telephone your order on 0181 652 3614, but only Mondays, Tuesdays or on Friday mornings. Address orders and all correspondence relating to this order to, Electronics World, Quadrant House, The Quadrant, Sutton, Surrey SM2 5AS.

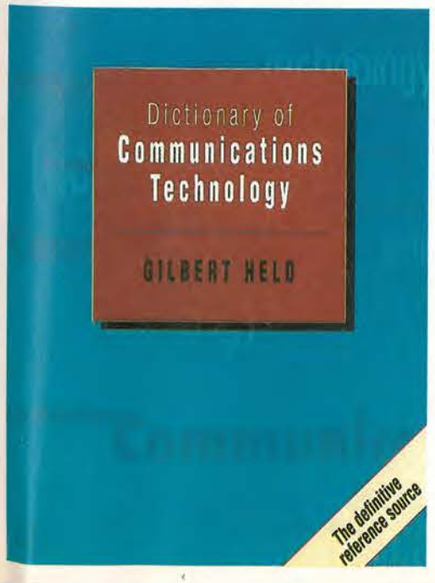

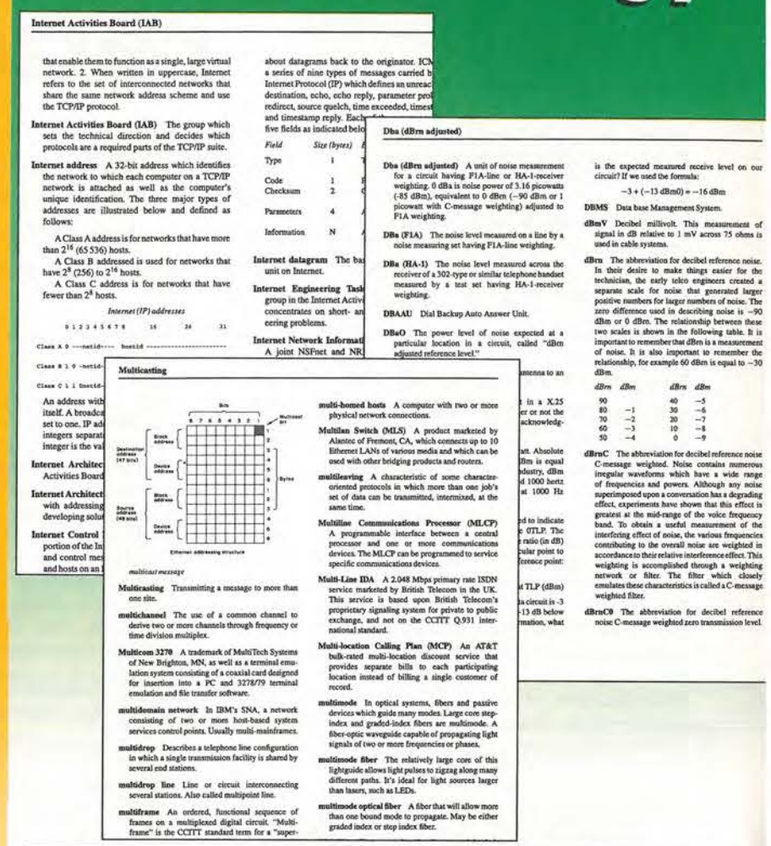
Internet Activities Board (IAB)

Dbs (dBrn adjusted)

Multicasting

Use this coupon to order your copy of Dictionary of Communications Technology

Please send me ..... copies of Dictionary of Communications Technology
Each copy of the book costs £32.50. plus £4 UK p+p, £8 Europe, £12 ROW per book.

Total amount £.....

Name

Company (if any)

Address

Phone number/fax

Make cheques payable to Reed Business Information Group.
Or, please debit my Master, Visa or Access card.

Card type (Access/Visa)

Card No

Expiry date

Road reading

Can you spot a 2mm crack in a road surface in 90µs? How about memorising the exact location of all the cracks along a 70km stretch of road? Roy Rubenstein investigates.

An automated system based on line scan cameras, digital signal processing and a removable disk is more suited to the task of assessing road surface deterioration than a human. Not only is such a system more consistent and faster than a human operator, it is safer too –for the operator and drivers – since lane closures are not needed.

Developing such a system is a task tackled by Aldershot-based Softronic Systems. The company has developed a vehicle-mounted inspection system that can detect cracks as small as 2mm while the vehicle is being driven at speeds of up to 50mile/h.

The system uses three 512-pixel line scan cameras, each covering 1m-wide, slightly overlapping strips of road. The output of the line cameras are then built up into 500-line images. "When we first looked at storing the data digitally some four years ago, the data rate – equivalent to 23Gbyte/hour – was such that it wasn't practicable," said Richard Lodge, director at Softronic. Accordingly, data was recorded on video tape, and digitised and analysed off-line. This proved laborious.

Softronic investigated moving part of the post-processing crack detection algorithm onboard the vehicle with the view of reducing the amount of digital data needed to be stored.

Since road surface images are noisy, using a lossy image compression algorithm runs the risk of losing the very fine detail being sought. In contrast, the degree of data compression achieved using a lossless compression scheme is insufficient – reducing the data by between ten and 15 per cent only.

The algorithm adopted by Softronic reduced the data by a factor of four: each eight-bit grayscale pixel reduced to a two-bit representation. While unwilling to fully detail the algorithm, Lodge describes a process involving the 512-by-512 image, from which the parameter for data reduction is worked out before each pixel is revisited and the data quartered.

"This reduces a 256kbyte image representing 1m^2 of road surface to 64kbyte, and the resulting data rate of 1.6Mbyte/s can now be written to disk," said Lodge.

To do this, for what is an average input data rate of 6.4Mbyte/s, five 40MHz Analog Devices' Sharc dsps are used. Two act as input/output processors while the remaining three – each connected via its serial links to the two i/o processors – handle every third image frame. The resulting 1.6Mbyte/s output data comprising image and road positional information is then stored on a 6Gbyte hard disk – equivalent to some 70km of 1m-wide road surface. The dsp system has only been added to one of the cameras.

Post processing, performed off the vehicle, then takes the stored data and looks for road cracks. The image processing takes into account the typical line proportions of cracks, interpolating between the points.

Lodge highlights the sheer amount of road image data that needs to be processed in real-time. "Most dsp applications process a relatively small amount of data." For processing the road surface image, the budget in terms of the execution time could not be tighter. According to Lodge, using a 40MHz clock, it equates to a max of 18 clock cycles being available for each pixel. It is meeting this tight execution time budget that Lodge is most proud of.

● The Transport Research Laboratory at Crowthorne, on behalf of the Highways Agency, commissioned Softronic Systems to work with them to provide the enabling technology which made this project possible. ■

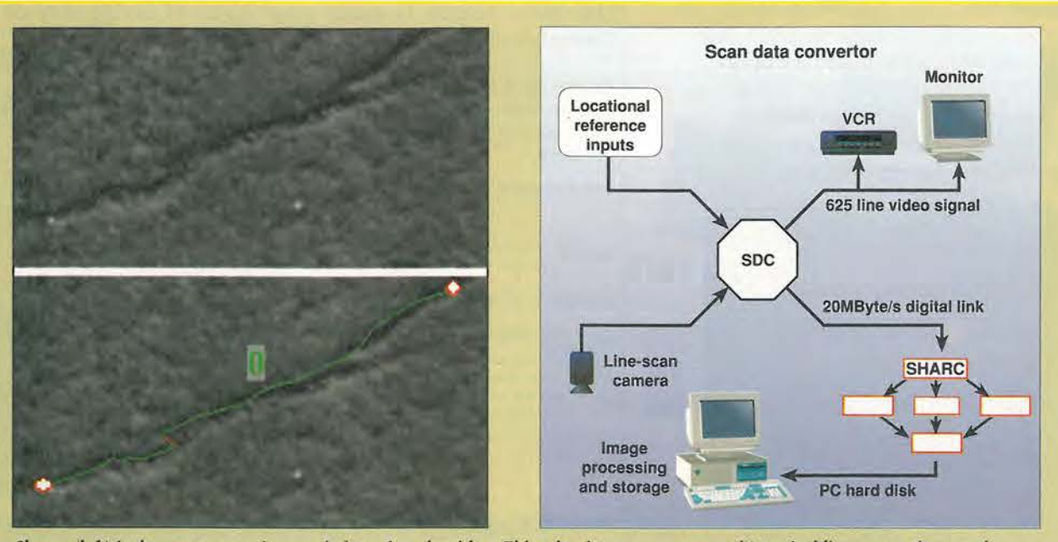

Shown (left) is the post processing crack detection algorithm. This takes into account a crack's typical line proportions, and involves interpolation between points. Also shown is a block diagram of the road inspection system. The camera input is mixed with road locational data before being scan converted for recording on video tape or for digital signal processing before being store on a pc's hard disk drive.

Circuit simulation can be seriously good fun

Those Engineers Ltd

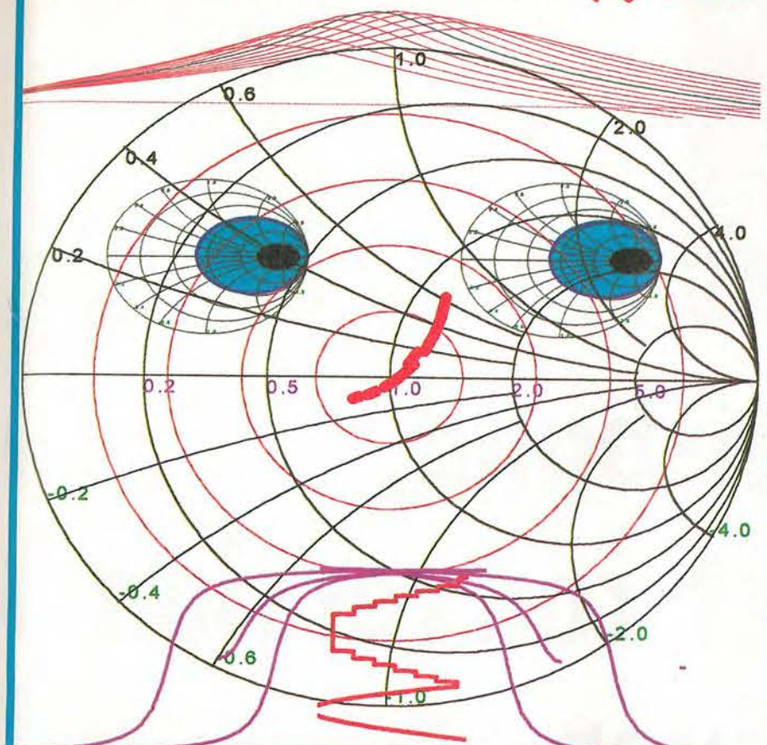

When you have the engineering edge, enjoy your work and catch subtle circuit behaviour before it's too late, you can afford to be light hearted. Add to this technical support from practising engineers who take a genuine interest in your work and you are really laughing.

With a free evaluation kit, you can test SpiceAge on your own circuits. The kit comes with an introductory booklet to show you how.

To hear more about this and other nice touches in SpiceAge, please contact the friendly people at Those Engineers Ltd, 31 Birkbeck Road, LONDON NW7 4BP.
Tel 0181 906 0155
FAX 0181 906 0969
Email those_engineers@compuserve.com
Web http://www.spiceage.com

CIRCLE NO. 124 ON REPLY CARD

Access VISA

Field Electric Ltd.
Tel: 01837 83736 Fax: 01837 83936
E-mail: field12b@aol.com
PO BOX 4, North Tawton EX20 2YJ

Hewlett Packard 7475A Plotter Serial 6 Pen	£86.00
Hewlett Packard 7550A Plotter HPIB Serial 8 Pen	£199.00
Hewlett Packard 7470A Plotter Serial 6 Pen	£75.00
Roland DXY 1300 8 Pen Plotter Serial Parallel	£135.00
Roland DXY 980 8 Pen Plotter Serial Parallel	£120.00
Tseng Dual Port SVGA ISA 16 Bit Graphics Card 1Mb runs 2 VDU from 1 PC	£26.00
1Mb ISA 16 Bit Graphics Card SVGA	£18.00
Quad Pro Plus/Tseng etc. PC1 SVGA Graphics, from	£22.00
3 Com Network Cards, various in stock, from	£15.00
IBM 3-5" 160Mb SCSI Hard Drives	£27.00
386 486 Laptops, please enquire, from	£85.00
12" Colour VGA-SVGA 800x600 Monitors, from	£35.00
14" Colour VGA 640x480 Monitors, from	£45.00
1-44Mb 3-5" H.D. Disc Drives, from	£8.00
486 DX PC's, from	£130.00
486 DX 2-66 Motherboards, from	£17.00
Rose PC Switching Boxes, from new	£29.00
Marconi Digital Analyser 2829	£145.00
Marconi Multiplex Tester 2830	£130.00
Krohn-Hite 3343 Filter	£85.00
Hewlett Packard 8470A 8412A	£375.00
Hewlett Packard 5345A	£500.00
Wallis Insulation Tester T30	£100.00
Hughes Scan Conversion Memory 639	£100.00
Tektronix DAS9100	£175.00
Lambda LK344A FMV 0-60VDC 4AIX	£85.00
ATI Mach 64 PCI 2mb SVGA Card	£39.95
Windows TV Card ISA	£28.95
486 DX Base Units 8Mb, 150Mb etc from	£139.00
SOUND TECHNOLOGY 1510A TAPE RECORDER & AUDIO TEST SET WITH MANUAL	**£375.00**

OVERSEAS ENQ WELCOME. TELEPHONE ORDERS ACCEPTED. PAYMENT C/C, P.O., CHEQUE etc. C/P. DETAILS PLEASE RING. ALL PRICES INC. 17.5% VAT UNLESS STATED. WE STOCK A LARGE SELECTION OF EQUIPMENT, IF YOUR REQUIREMENT IS NOT LISTED PLEASE RING.

CIRCLE NO. 125 ON REPLY CARD

CHART AUDIO LEVELS
In-vision colour display or hard copy printout

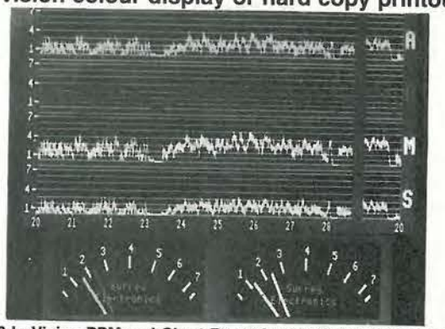

PPM10 In-Vision PPM and Chart Recorder generates a display emulating the well known coaxial TWIN movements for monitoring stereo audio levels and mono compatibility. Also: **STEREO TWIN METER BOX** comprising two PPM9 board, featuring inherent stability with law under microprocessor control. A free standing mains powered box frequently used for the final stereo monitoring when working to broadcast standards. Manufactured under licence from the BBC.

★ Advanced Active Aerial 4kHz-30MHz ★ Stabilizer frequency shift units for howl reduction ★ 10 Outlet Distribution Amplifier ★ Stereo Variable Emphasis Limiter ★ PPM9, PPM5 hybrid and PPM8 IEC/DIN –50/+6dB drives and movements ★ Broadcast Stereo Coders ★ Broadcast Monitor Receiver 150kHz-30MHz ★

SURREY ELECTRONICS LTD
The Forge, Lucks Green, Cranleigh
Surrey GU6 7BG
Telephone: 01483 275997 Fax: 276477
s.e@ndirect.co.uk www.ndirect.co.uk/-se/se.html

Novel application of low cost components result in a unique receiver design for the hf amateur bands. By Hannes Coetzee, ZS6BZP.

Multi-band, direct-conversion receiver

Today's listeners ask a lot from a radio receiver. Among other things, it is expected to be able to demodulate a very weak signal – sometimes with some very strong local transmissions only a few kilohertz away. This has made the distortion free dynamic range of the receiver very important, along with selectivity and, for vhf receivers, noise figure.

For a high-frequency receiver, the distortion-free dynamic range is to a great extend determined by the mixer, or mixers, used.

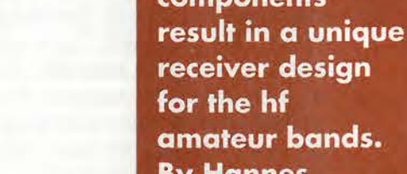

Fig. 1. In the typical diode-ring mixer, the switching signal needs to be significantly higher than the signal being switched.

Mixer using an analogue switch

The heart of this direct-conversion receiver is a low-cost 74HC4066 c-mos analogue switch implemented as a double-balanced mixer[1]. The switching speed of high-speed c-mos makes it possible to use this logic family right through the hf spectrum, i.e. from 3 to 30MHz.

The switches in the 74HC4066 IC replace the diode switches found in a conventional diode-ring mixer, **Fig. 1**. In the conventional normal diode mixer, local-oscillator, rf and intermediate-frequency signals are coupled to the diode ring via two rf transformers. Two local oscillator signals that are 180° out of phase are fed to the diode quad by the rf transformer.

Phase shift is accomplished with the aid of a radio-frequency transformer, causing two pairs of diodes to alternately conduct on the positive and negative cycles of the local-oscillator signal. The conducting diodes thus switch the rf signal to the intermediate-frequency port at the rate of the local oscillator signal.

For a diode to function satisfactorily as a switch, the switching signal needs to be much more powerful than the signal being switched. For this reason some high level diode ring mixers make use of a +27dBm, i.e. 500mW, local oscillator level to provide good strong-signal handling capability.

Even then a diode is not a perfect switch due to the transfer function of the diode not being 100% linear. This is one of the causes of the unwanted mixing products that become a big problem when strong signals from the antenna are present at the rf input port. With a half-watt local oscillator signal, radiation also needs some special considerations.

In the mixer to be described, the diodes are replaced with the analogue switches of a 74HC4066. The gates of a 74HC04 hex inverter are used to split the local-oscillator signal into two signals with a 180° phase difference.

This device also converts the local-oscillator signal to a square wave. Using the inverter allows one of the mixer rf transformers required by the diode-ring mixer to be replaced with an inexpensive c-mos integrated circuit. Only the rf signal needs to be transformer coupled into the mixer.

Two switches are used in parallel to reduce the on resistance with Vcc/2 dc bias applied via the rf transformer, **Fig. 2**. As long as the input level is high enough to activate the Schmitt trigger, the mixer is insensitive to the drive level and wave form of the local oscillator signal.

Square wave switching signal has a not so obvious, but very useful characteristic: the mixer responds to harmonics of the local-oscillator signal, although with reduced performance. This harmonic mixing technique is often used by microwave engineers for the down conversion of a microwave signal to a more manageable frequency.

When the mixer is used in a direct-conversion receiver, for example at 7MHz, signals on 14, 21, 28MHz, etc., will also be mixed down to base band.

Fortunately, the above mentioned frequencies are all harmonically related amateur bands. A suitable band-pass filter between the antenna and the mixer is all that is needed to select the band of interest. It is thus possible to use the same local oscillator for a multi-band, direct-conversion receiver.

But unfortunately, there are trade-offs. The penalty for multi band operation is increased insertion loss through the mixer and reduced dynamic range when operating on the harmonics. Fortunately though, the sensitivity can easily be improved by a rf pre-amplifier ahead of the mixer.

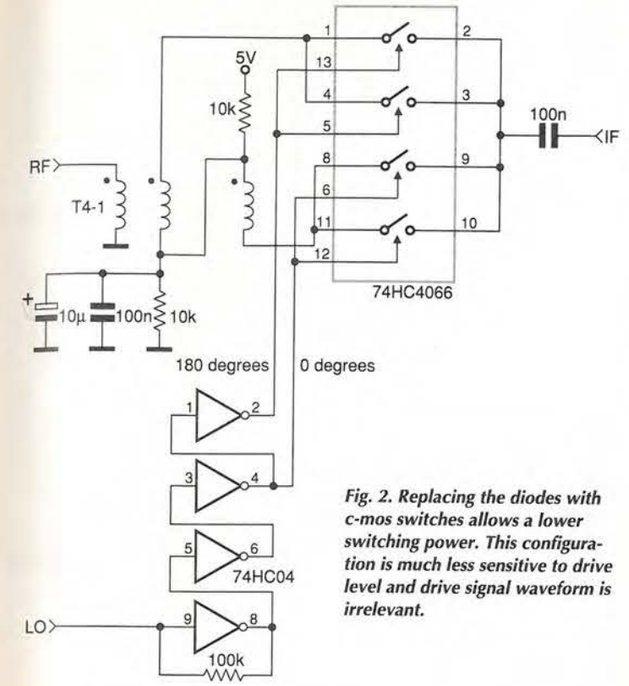

Fig. 2. Replacing the diodes with c-mos switches allows a lower switching power. This configuration is much less sensitive to drive level and drive signal waveform is irrelevant.

Summary of the receiver's capabilities

Frequency coverage:	7.0 - 7.1MHz (40m amateur band) 14.0 - 14.2MHz (20m amateur band) 21.0 - 21.3MHz (15m amateur band) 28.0 - 28.4MHz (10m amateur band)
RF input impedance:	50Ω unbalanced.
Detection (audio) bandwidth:	800Hz or 2.4kHz switchable
Audio filter type:	7th-order elliptical
Audio amplifier drive:	8Ω or higher
Audio output power at 8Ω:	4W
Power requirements:	12V dc.

Direct-conversion receiver performance summary

Frequency	Bandwidth	Minimum discernable signal	Test-tones spacing	Distortion-free dynamic range
(MHz)	(kHz)	(dBm)	(kHz)	(dB)
7.020	2.4	–128	20	105
14.040	2.4	–109	20	101
21.060	2.4	–112	20	100
28.080	2.4	–104	20	90

The theoretical noise floor in a 2.4kHz bandwidth is at –140.2dBm. The measured –128dBm minimum discernible level at a 7MHz rf input represents a receiver noise figure of around 12dB in 2.4kHz bandwidth. This is made up by the mixer's 7dB insertion loss, 1dB through the rf band-pass filter and 3dB contributed by the image that is also mixed down to base band. The measured and calculated values correlate fairly well for a change.

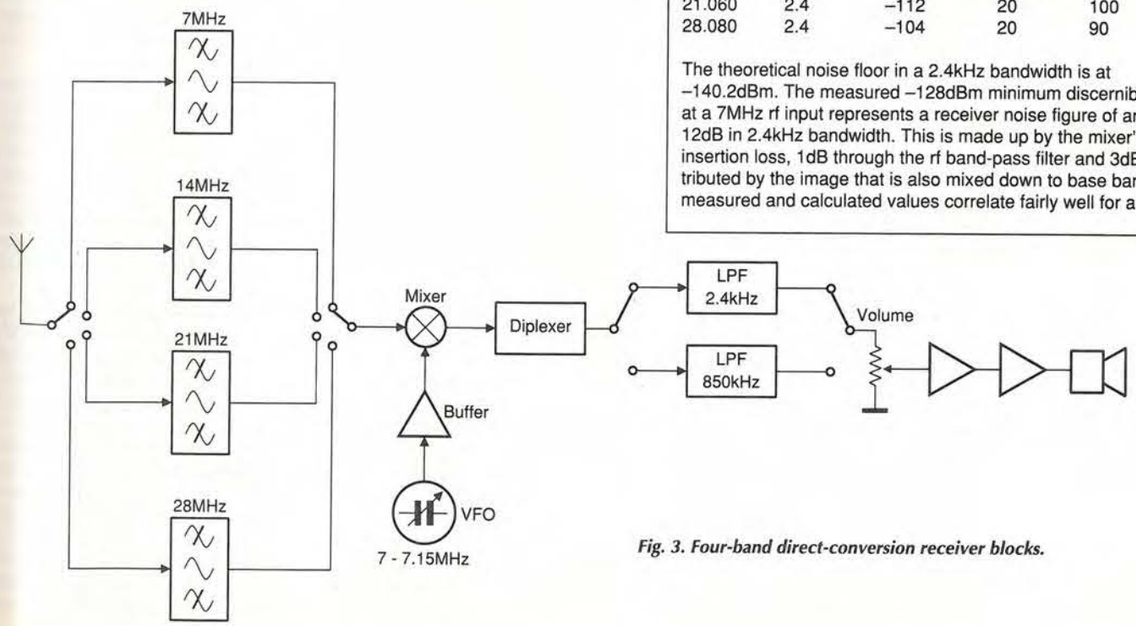

Fig. 3. Four-band direct-conversion receiver blocks.

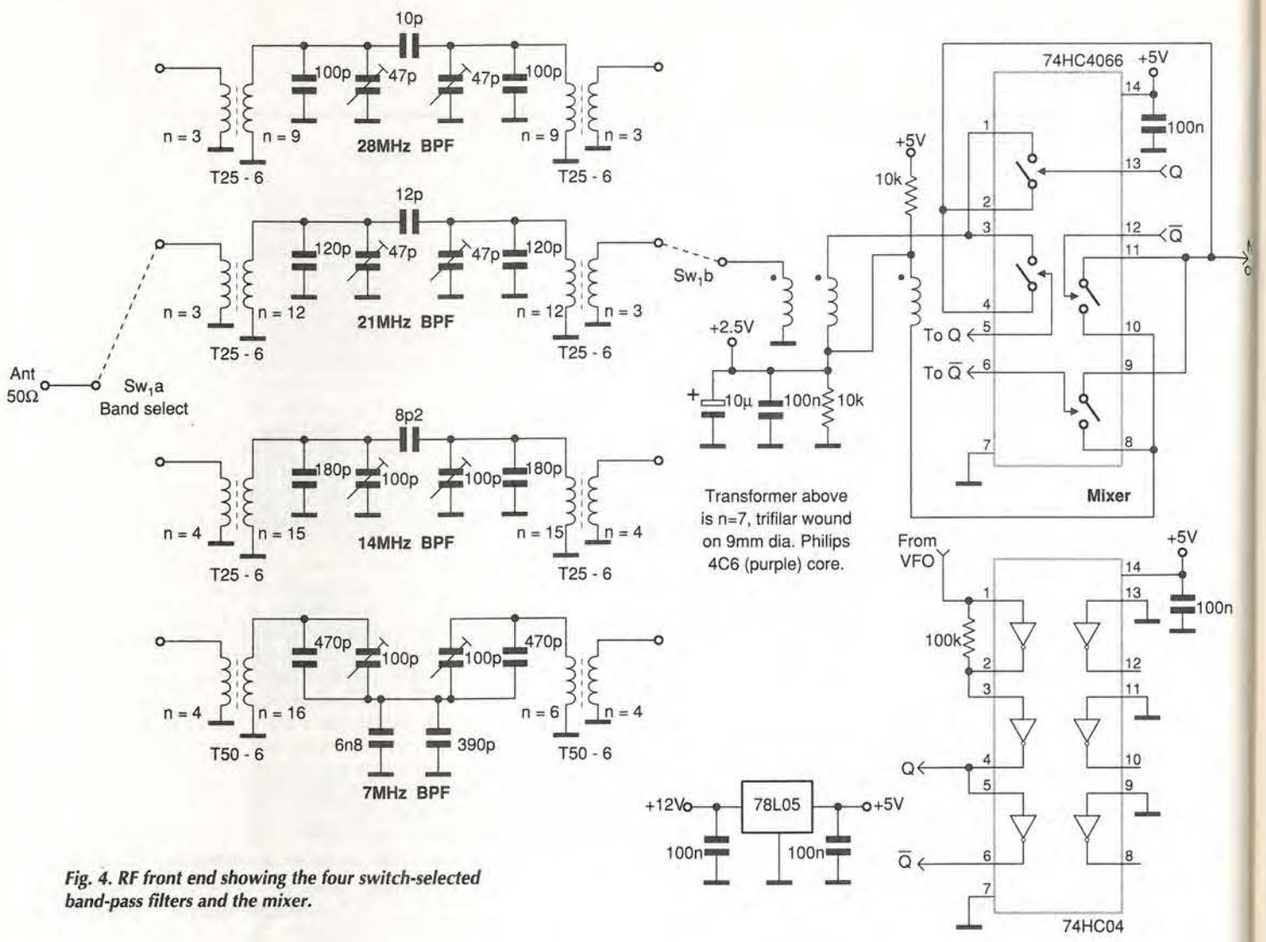

Fig. 4. RF front end showing the four switch-selected band-pass filters and the mixer.

The c-mos analogue switches used in the mixer are very linear when switched on and give good isolation when switched off, resulting in a mixer with good strong signal handling capabilities. This is reflected in the very good dynamic range of the receiver.

Receiver

Shown in block form in **Fig. 3** and in full in **Fig. 4,** the receiver is a fairly conventional direct conversion (homodyne) design.[2,3,4]

The received signal is mixed down to base band, i.e. 300Hz to 3kHz, with the aid of the local oscillator running at very nearly the same frequency as the received signal. This enables Morse-code continuous-wave and single sideband signals to be received. Even amplitude-modulated transmissions can be demodulated if the local oscilator is tuned to the same frequency as the received signal.

Note that a nasty whistle results when the local-oscillator and received frequencies differ too much, i.e. by more than about 300Hz.

Receiver selectivity is determined by selecting either a 2.4kHz passive low-pass filter for ssb, or a passive 850Hz low-pass filter for cw.

Audio frequency amplifiers are used to increase the signal to an adequate level for driving head phones or a loudspeaker. In this receiver automatic gain control is not implemented to keep the design simple.

Designing the band-pass filters

The band of interest is filtered out with the aid of second-order band-pass filters preceding the mixer. If better rejection of the other amateur bands is required, higher order filters can be implemented. With the current low of the solar cycle, the second-order filters proved to be quite adequate.

A Butterworth response with a q0 of 14.142 was selected out of Zverev[5] – the bible of filter design. The theoretical insertion loss is just less than a decibel, which adds little to the noise figure of the receiver.

The inductance value used for the 7MHz filter is 1µH, requiring, approximately 520pF to resonate at 7MHz. Coupled loops are used to improve the attenuation of the unwanted 14MHz response. Coupled loops cut off at a higher rate on the high side, while coupled nodes attenuate better on the low side of the filter.

An inductor Q of 180 is realisable on an Amidon T50-6 toroid (stocked in UK by Cirkit). Twenty turns provide approximately 1µH of inductance. The loaded Q of the resonator is 15, resulting in a 3dB filter bandwidth of 665kHz. Note that the number of turns on a toroid is determined by the number of times that the wire passes through the hole of the toroid.

For the 14MHz band-pass filter, use is made of Amidon T25-6 toroids. The inductor Q for an inductance of 620nH is 170. I chose a loaded filter Q of 23, resulting in a 3dB filter bandwidth of 853kHz.

The 50Ω filter termination resistance is transformed to 1490Ω across the resonators by the transformer action between the coupling windings and those forming the inductor.

The inductance value used for the 21MHz filter is 389nH. Twelve turns on a T25-6 toroid provide the necessary inductance, which resonates with 148pF. A resonator Q of 14 is realisable, which results in a 3dB filter bandwidth of 2.1MHz.

On 28MHz, the inductor Q comes down to 100 for an inductance of 240nH on a T25-6 toroid. The 3dB bandwidth of the filter is 3.974MHz, representing a loaded resonator Q of 10.

If you want to achieve the 1dB theoretical insertion loss of the filters, it is vital that you only use capacitors with a low insertion loss at rf. Good choices are NP0 ceramic capacitors for the fixed values and Philips trimmer capacitors for the variable types.

Local oscillator options

Many suitable designs for a variable-frequency oscillator covering approximately 7-7.15MHz have been published over the years.

In this receiver, a classic Hartley configuration implemented with a 2N5484 junction-fet is used.

To ensure a clean output signal, the j-fet must be prevented from operating in the pinch-off region. In a junction fet with a high I_{DSS}, such as the J310, this is accomplished with a source resistor bypassed by a suitable capacitor.

The I_{DSS} of a 2N5484 is very low and individual samples are fairly well matched. This makes the use of a source resistor to set the drain current unnecessary.

Coupling between the resonator and the amplifier (j-fet), must be as light as possible to prevent degradation of the resonator's Q. This is accomplished with a small value NP0 capacitor.

Output is buffered by a common

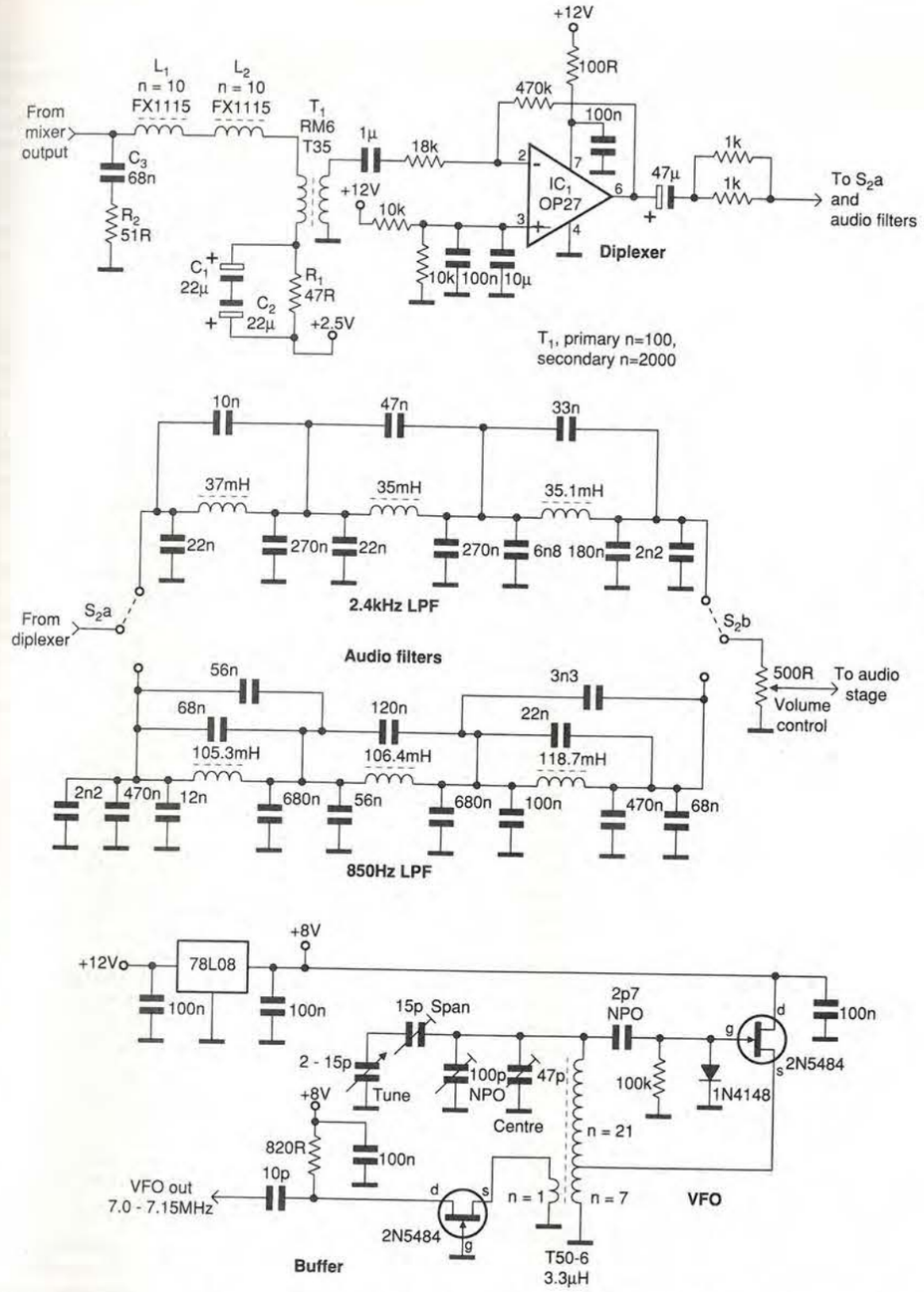

Fig. 5. Diplexer presents a 50Ω load to the front end, converts it to several kilo-ohms ready for the op-amp filter. Two subsequent passive filters allow selection of 2.4kHz or 850Hz low-pass filtering of the audio signal from the op-amp. Also shown is the 7 to 7.15MHz variable-frequency oscillator.

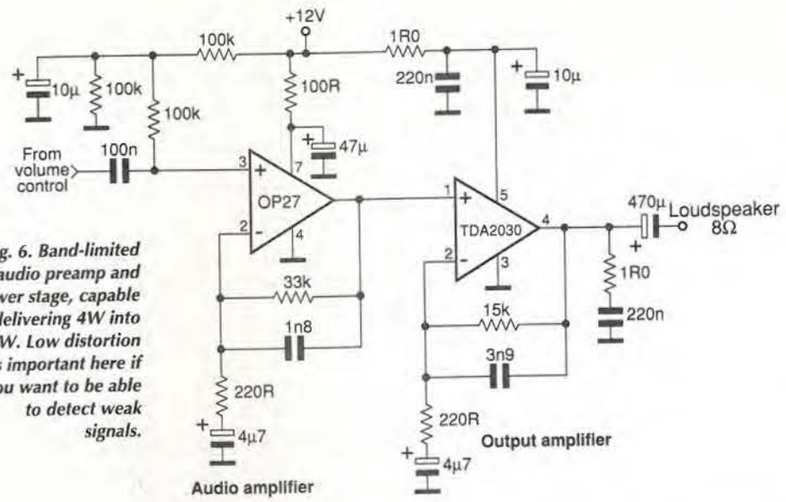

Fig. 6. Band-limited audio preamp and power stage, capable of delivering 4W into 8W. Low distortion is important here if you want to be able to detect weak signals.

gate 2N5484 junction-fet amplifier inductively coupled to the resonator. This effectively isolates the variable-frequency oscillator from the rest of the circuitry. Both the variable-frequency oscillator and the buffer get their dc supplies from a well regulated, low noise *78L08* regulator.

It is good practice to build the variable-frequency oscillator and associated circuitry in a separate, shielded enclosure.

In my prototype, the span and centre frequencies were adjusted using trimmer capacitors. Once the settings were correct, I relaced them with fixed-value NP0 capacitors of the same value. This greatly improved the oscillator's stability. After a ten-minute warm-up period, the drift of the oscillator was found to be low enough for monitoring ssb and cw signals.

A multimeter capable of measuring capacitance is adequate for matching the fixed and variable capacitor values.

To resolve ssb and morse code signals easily, the tuning rate must not exceed 30kHz per revolution of the tuning knob. When the receiver is operated on one of the harmonics, at 14, 21, 28MHz, the tuning rate of the oscillator is also increased – four times on 28MHz for example. The receiver then tunes from 28.0 to 28.6MHz.

To comply with the 30kHz per revolution criteria on 28MHz, the tuning rate at 7MHz needs to be 4.25kHz per revolution. This is difficult to implement, and a compromise might be needed. A large tuning knob helps a lot to improve matters on the higher bands.

On the prototype, a variable capacitor with a reduction gearbox was used, but this can be replaced with variable-capacitance diodes and a multi-turn potentiometer.

A band-spread capacitor used in conjunction with the main tuning capacitor is probably the best solution.

Diplexer details

It is very important that the mixer must be terminated into a 50+j0Ω load from dc to at least 30MHz[6] to prevent degradation of the mixer characteristics. This is accomplished with the aid of a low-pass, band-pass, high-pass diplexer.

Components $R_{1,2}$, C_1, C_2, C_3, T_1, $L_{1,2}$ and IC_1 form the diplexer. For frequencies from 0 to 300Hz, the copper resistance of the primary winding of the audio transformer, T_1, of around 4Ω, together the 47Ω resistor R_1, terminates the mixer.

Low-pass. The low-pass action is accomplished with two 22µF capacitors, $C_{1,2}$ in series. These represent an unpolarised 11µF capacitor with a reactance of 50Ω at 300Hz – the low-pass section's cross over frequency.

Filtering of frequencies below 300Hz also helps to reduce microphonics, which is sometimes an annoying problem associated with direct conversion receivers.

Band-pass. The band pass section not only terminates the mixer correctly, but also feeds the wanted received signal to the rest of the receiver chain. Generally available, low-noise op-amps attain their lowest noise figures when they are fed from a source with an impedance of several kilo-ohms[6].

An audio transformer turns the 50Ω impedance needed to match to the mixer, into the several kilo-ohms to suit the the op-amp. This transformer has dual advantages of voltage gain coupled with virtually no added noise. This helps to keep the overall noise figure of the receiver the same as the input stages, namely the band-pass filter and mixer.

Although winding a transformer is at the best of times a pain, the benefits really make it worth the while. The transformer is wound on an ungapped, RM6 core without a mounting hole through the centre. Siemens manufactures this type of core in a T35 material.

The primary consist of a 100 turns while the secondary comprises 2000 turns – or as many as you can fit on. Both the primary and secondary are very carefully and patiently wound with 0.06mm enamelled copper wire. A mechanical winder will help a lot.

On the high-pass side, which lets through frequencies from 46kHz to more than 30MHz, the mixer is terminated as follow into 50Ω

The inductance of the two ferrite bead inductors in series, $L_{1,2}$, is 170µH. Using $X_L=2\pi FL$ shows that a load of +j50Ω is presented at 46 810Hz. A 68nF capacitor, C_2, provides the necessary –j50Ω reactance to cancel it. In this way, from 46 810Hz up to many megahertz, the 51Ω resistor, R_2, terminates the mixer.

Low-pass filters

Seventh-order, passive elliptical low-pass filters terminated in 500Ω provide excellent selectivity.

Suitable designs have been published using off-the-shelf 33mH and 100mH inductors.[2,3] Unfortunately these components are not freely available in South Africa.

I designed 850 and 2400Hz low-pass filters incorporating hand-wound inductors using Zverev.[5] These inductors were wound on couple of P14/8 pot cores made from 3B7 material, which is now obsolete (try 3F3). The A_L value of this material is 350nH/(*winding*)^2. The number of turns required by each inductor was calculated and the pot cores were assembled with a very small amount of epoxy used to keep the two halves together.

Fortunately many modern multimeters can measure inductance, which makes confirming the inductance values at audio frequencies a piece of cake.

High quality capacitors are a must for this application. Polystyrene, Wima and MKT are all suitable. Using capacitors with a tolerance of around 10% results in an unknown amount of ripple in the pass band of the filter. This is totally acceptable for speech and morse code applications.

The theoretical insertion loss of an equally terminated filter is 6dB. I measured an insertion loss of less than 7dB on the filters used in the prototype receiver.

Although modern switched capacitor filters give the same pass-band response as the above passive filter – and sometimes even better – the dynamic range is limited to about 85dB. This is not enough for the main filter of a modern hf receiver.

For the narrow cw filter, I implemented a low-pass response in favour of a band-pass response. The human ear needs some background noise to aid in the decision making process of decoding a weak morse code signal[10]. Electronic detection on the other hand measures the energy in a certain bandwidth, which necessitates a band-pass response.

The narrow cw filter also helps to reduce one of the more serious principle defects of a direct conversion receiver – namely image response.

Audio amplification

Low-noise op-amps provide the majority of gain. The low-pass filter is fed via a 500Ω termination resistor from the op-amp output stage of the diplexer.

Output of the elliptical low-pass filter feeds a non inverting amplifier with a voltage gain of 43dB. Input impedance of this amplifier is defined as 500Ω by the volume potentiometer, which also terminates the filter.

A 6V bias voltage is applied to the input of the amplifier by the three 100kΩ resistors. The output of this stage feeds the power op amp output stage.

Capacitor C_p, in parallel with the feed back resistor R_p, forms a first-order low-pass filter with a 3dB cut off frequency of close to 2.7kHz. This reduces the high-frequency noise generated in this stage.

Capacitor C_s in series with the voltage divider resistor R_s to ground performs two duties. First of all it blocks dc. Secondly, it forms a first-order high-pass filter to reduce the effects of microphonics.

Output amplifier

A low-distortion output stage is very important to prevent weak signals from sounding fuzzy. This problem is typical of the majority of audio amplifier ICs. The class B output stage used in these ICs just isn't good enough.

I found a good compromise between current consumption and high-fidelity audio was in the *TDA2030* power op amp. At 38mA, its quiescent current is relatively low, yet it is capable of driving a 8Ω loudspeaker.

The prototype receiver is frequently used at camp sites for demonstrations to groups of young people interested in radio. The receiver is powered from a rechargeable sealed-gell battery, which makes the current consumption of the receiver important when a loudspeaker is used.

If you do not need to drive a loudspeaker, the output stage can be replaced with an op-amp capable of driving 600Ω headphones. The TDA2030 is supplied in a TO220 package and will need a heat sink.

To ensure stability of the output stage and to prevent any rf feedback from creating havoc, the output is terminated for high frequencies via a series connected 1Ω resistor and 220nF capacitor to ground.

The two resistor/capacitors pairs in the feed back path perform the same function as those in the preamplifier.

Housing the receiver in a metal enclosure avoids problems with rf pick-up and emissions. I built my prototype on plain un-etched pcb.

In summary

In common high-performance hf receivers, only the first mixer is a very high performance type, incorporating for example switched junction fets. The cost driven assumption is made that the first intermediate-frequency filter will limit the frequencies that the following mixers are exposed to.

During a cw contest for example, there are sometimes quite a few strong signals present in the pass bands of the various IF filters. This can be the source of intermodulation distortion in following mixers in an otherwise excellent receiver.

In my direct conversion receiver, closely spaced signals are not a problem since only a single, high-performance mixer is used. Even with very closely spaced signals the spurious free dynamic range remains very good, probably only being limited by the phase noise of the local oscillator.

Although the presented receiver is fairly simple and easy to implement – especially when you make use of ready-wound inductors – the performance can rival many expensive commercial hf receivers. ■

Design improvements

From the performance summary of the receiver, it is clear that the sensitivity can be improved when operating on the harmonics of the local oscillator frequency, i.e. 14, 21 and 28MHz. An rf preamplifier that can be switched in and out as needed will improve the situation quite a bit. A gain of 10 to 20dB will probably be adequate.

It is important that such a pre-amplifier must not degrade the dynamic range of the receiver too much. This is accomplished with a high standing current through the pre-amplifier's transistor.

In general, high dynamic range and low current consumption do not go hand in hand. I suggest using a noiseless feedback design with bipolar transistors or a broadband junction-fet amplifier. Although I have not tried this, suitable designs can be found in references 8 and 9.

Dynamic range of the mixer can in most instances be improved by a few decibels by running the 74HC4066 from a 8V supply. For c-mos, the switching point is normally at Vcc/2, for a 8V supply, making it 4V. When run from a 5V supply, the 74HC04 output can swing to 4.9V, which is normally adequate for switching the 74HC4066. This modification will also decrease the insertion loss by nearly 0.5dB, due to the lower on resistance of the switches.

The mixer described in this article is highly suitable for implementation in a phasing or Weaver type ssb receiver.[11] A quadrature local oscillator signal can be digitally generated with the aid of a dual D-type bistable IC. The dynamic range will be improved by 6dB due to the 3dB reduction in noise figure and the dividing of the rf input signal to the two mixers.

References

1. Coetzee, PJ, 'A Low Cost, High-Performance Double Balanced Mixer for HF Applications,' *RF Design Magazine*, June 1995.
2. Campbell, Rick, KK7B, 'High-performance Direct-Conversion Receivers,' *QST*, p19-28, August 1992.
3. Carr, Joseph J, 'Direct Conversion Receivers, Parts 1 & 2,' *Elektor*, p42-48, March 1994, pp. 54-58, April 1994.
4. 'The ARRL Handbook for Radio Amateurs,' p. 17.19-17.22, 1995 edition, pub. ARRL (US).
5. Zverev, Anatol I, 'Handbook of Filter Synthesis,' John Wiley and Sons, 1967.
6. Drexler, Paul E., 'Effect of Termination Mismatches on Double-Balanced Mixers,' *Microwave Journal*, p187-190, January 1986.
7. Christensen, John W, 'Noise-figure curves ease the selection of low-noise op amps,' *EDN*, pp. 81-84, August 1994.
8. Rohde, Ulrich L, DJ2LR, 'Wideband Amplifier Summary,' *Ham Radio*, pp. 34-36, November 1979.
9. Burwasser, Alex, N6DC, 'How to design broadband jfet amplifiers,' *Ham Radio*, pp. 12-19, November 1979.
10. Taylor, Ron, G3AVQ, 'Copying Weak CW Signals,' Technical Topics, *Radio Communication*, pp. 30-31, July 1990.
11. Hamilton, Nic, G4TXG, 'SSB: third method, fourth explanation,' *Electronics World + Wireless World*, pp. 278-284, April 1993.

The Autorouter for EASY-PC!

MultiRouter is "the best Autorouter that I have seen costing less than £10,000!" R.H. - (Willingham, UK)

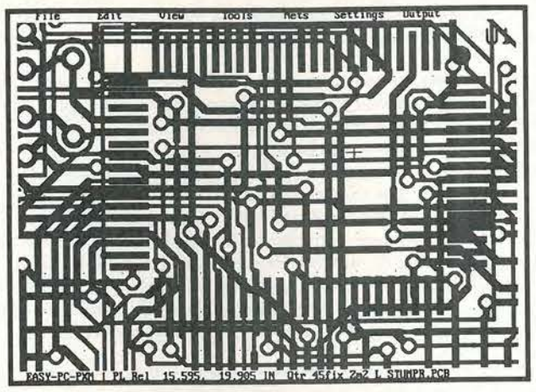

- **Award Winning MultiRouter uses the latest 32 bit, Shape based, Rip-up and Re-try Technology.**
- **From single sided to 8 layers!**
- **100% Completion where other autorouters fail!**
- **100% routed 140 Components on a 210mm x 150mm board in less than 10 minutes! (75MHz Pentium)**
- ***From £295! - Could Easily Pay For Itself On The First Project!***

Prices exclude VAT& P&P

Number One Systems

Write, fax, phone or e-mail for full information.

UK/EEC: Ref: WW, Harding Way, St.Ives, Cambridgeshire, ENGLAND, PE17 4WR. e-mail: *sales@numberone.com*
Telephone UK: 01480 461778 (7 lines) Fax: 01480 494042 International +44 1480 461778/494042

USA: Ref: WW, 126 Smith Creek Drive, Los Gatos, CA 95030
Telephone/Fax: (408) 395-0249

http://www.numberone.com VISA MasterCard

adhfmu

CIRCLE NO. 126 ON REPLY CARD

ANCHOR SUPPLIES LTD

Peasehill Road, Ripley, Derbys DE5 3JG
Tel: (01773) 570139 Fax: (01773) 570537

SPECIAL OFFER

Our NEW Test and Measurement Centre is now OPEN 7 DAYS A WEEK at our RIPLEY Depot, and for ONE MONTH ONLY we will supply

AVO Model 8

Multimeters Test Set Number 1 (Ruggedised Military Version)
TESTED and WARRANTED for 30 days with VERIFIED CALIBRATION
Complete with Probes and Leads and Case for the LOWEST EVER PRICE

only £34 + vat (£39.95 including VAT) Plus UK delivery of £5.95

OPEN TO THE PUBLIC 7 DAYS A WEEK
Monday-Friday 8.30 to 5.30. Saturday 9.00 to 5.00. SUNDAY 10.00 to 4.00

FREE PARKING ON SITE...VERY EASY ACCESS FROM M1 J26 OR J28 AND A38

Bring the family along...they will love to see our Military Vehicle Collection as well as our De Haviland Vampire Jet Aircraft.
AND for a Limited Period... Come along on a SATURDAY between 12.00 and 1.00 and see our Chieftain Tank, Feret SC and Saracen APC "Run-Up"

ELECTRONICS WORLD INCORPORATING WIRELESS WORLD

READER INFORMATION SERVICE

For more information about any of the products or services in this issue of **ELECTRONICS WORLD**, simply ring the relevant enquiry number.
Enquiry numbers may be found at the bottom of each individual advertisement.

101	102	103	104	105	106	107	108	109
110	111	112	113	114	115	116	117	118
119	120	121	122	123	124	125	126	127
128	129	130	131	132	133	134	135	136
137	138	139	140	141	142	143	144	145
146	147	148	149	150	151	152	153	154
155	156	157	158	159	160	161	162	163
164	165	166	167	168	169	170	171	172
173	174	175	176	177	178	179	180	181

Name
Job title
Company Address
Telephone

FEBRUARY 1998

Only tick here if you do not wish to receive direct marketing promotions from other companies. ☐

Subscribe today!

Guarantee your own personal copy each month

Save on a 2 year subscription

ELECTRONICS WORLD
INCORPORATING WIRELESS WORLD

Subscribe today!

Guarantee your own personal copy each month

Save on a 2 year subscription

ELECTRONICS WORLD
INCORPORATING WIRELESS WORLD

Newsagent order form

Pass this order form to your newsagent to ensure you don't miss the next issue of *EW.*

To .....
(name of Newsagent)

Please reserve me the March issue of *Electronics World* and continue to order every month`s issue until further notice

Name.....

Address.....

.....

.....

.....

Thank you

SEE OVER!

ELECTRONICS WORLD
INCORPORATING WIRELESS WORLD

SUBSCRIPTION CARD

ease enter my subscription to ELECTRONICS WORLD. I enclose Cheque/Eurocheque
the value of £ _____ made payable to **Reed Business Information**
ease charge my
astercard/Visa/
nex account

/ith £ _____ Expiry Date _____

ignature _____

ame _____

ob Title _____

ddress _____

_____

_____ Postcode _____

l: _____ Country _____

SUBSCRIPTION RATES

UK 1 year	£32
UK 2 years	£58
Student rate(proof required)	£21
Airmail	
Europe 1 year	£46
Europe 2 years	£83
Rest of the world 1 year	£56
Rest of the world 2 years	£101
Surface mail 1 year	£37

Post to:
ELECTRONICS WORLD
P.O. Box 302
Haywards Heath,
West Sussex RH16 3DH UK.

CREDIT CARD HOTLINE
Tel: +44 01444 445566
Fax: +44 01444 445447

Please tick here if you do not wish to receive direct marketing-promotion from other companies ☐

049

Postage will be paid by licensee

Business Reply Service
Licence No. CY711

Do not affix postage stamps if posted in Gt. Britain, Channel Islands, N. Ireland or the Isle of Man.

ELECTRONICS WORLD
Reader Information Service
Reed Business Information
Oakfield House
Perrymount Road
Haywards Heath
Sussex RH16 3BR

21

ELECTRONICS WORLD
INCORPORATING WIRELESS WORLD

SUBSCRIPTION CARD

Please enter my subscription to ELECTRONICS WORLD. I enclose Cheque/Eurocheque
to the value of £ _____ made payable to **Reed Business Information**
Please charge my
Mastercard/Visa/
Amex account

With £ _____ Expiry Date _____

Signature _____

Name _____

Job Title _____

Address _____

_____

_____ Postcode _____

Tel: _____ Country _____

SUBSCRIPTION RATES

UK 1 year	£32
UK 2 years	£58
Student rate(proof required)	£21
Airmail	
Europe 1 year	£46
Europe 2 years	£83
Rest of the world 1 year	£56
Rest of the world 2 years	£101
Surface mail 1 year	£37

Post to:
ELECTRONICS WORLD
P.O. Box 302
Haywards Heath,
West Sussex RH16 3DH UK.

CREDIT CARD HOTLINE
Tel: +44 01444 445566
Fax: +44 01444 445447

Please tick here if you do not wish to receive direct marketing-promotion from other companies ☐

049

HART

The Home of *Hi-Finesse*. Its not what you do, its HOW you do it that counts!.

Hart Audio Kits and factory assembled units use the unique combination of circuit designs by the renowned John Linsley Hood, the very best audiophile components, and our own engineering expertise, to give you unbeatable performance and unbelievable value for money.
We have always led the field for easy home construction to professional standards, even in the sixties we were using easily assembled printed circuits when Heathkit in America were still using tagboards!. Many years of experience and innovation, going back to the early Dinsdale and Bailey classics gives us incomparable design background in the needs of the home constructor. This simply means that building a Hart kit is a real pleasure, resulting in a piece of equipment that not only saves you money but you will be proud to own.
Why not buy the reprints and construction manual for the kit you are interested in to see how easy it is to build your own equipment the HART way. The FULL cost can be credited against your subsequent kit purchase.

'AUDIO DESIGN' 80 WATT POWER AMPLIFIER.

This fantastic John Linsley Hood designed amplifier is the flagship of our range, and the ideal powerhouse for your ultimate hifi system. This kit is your way to get £K performance at bargain basement prices. Unique design features such as fully FET stabilised power supplies give this amplifier World Class performance with startling clarity and transparency of sound, allied to the famous HART quality components and ease of construction. Standard model comes with a versatile passive front-end giving 3 switched inputs, with ALPS precision "Blue Velvet" low-noise volume and balance controls, no need for an external preamp!. Construction is very simple and enjoyable with all the difficult work done for you, even the wiring is pre-terminated, ready for instant use!. All versions are available with Standard components or specially selected Super Audiophile components and Gold Plated speaker terminals and all are also available factory assembled.

K1100 Complete STANDARD Stereo Amplifier Kit, ... **£415.21**
K1100S Complete SLAVE Amplifier Kit, ... **£353.62**
K1100M Complete MONOBLOC Amplifier Kit, ... **£271.20**
RLH11 Reprints of latest Amplifier articles **£1.80**
K1100CM Construction Manual with full parts lists **£5.50**

ALPS "Blue Velvet" PRECISION AUDIO CONTROLS.

Now you can throw out those noisy ill-matched carbon pots and replace with the famous Hart exclusive ALPS 'Blue Velvet' range components only used selectively in the very top flight of World class amplifiers. The improvement in track accuracy and matching really is incredible giving better tonal balance between channels and rock solid image stability. Motorised versions have 5v DC motor.

MANUAL POTENTIOMETERS
2-Gang 100K Lin. **£15.67**
2-Gang 10K, 50K or 100K Log **£16.40**
2-Gang 10K Special Balance, zero crosstalk and zero centre loss. **£17.48**

MOTORISED POTENTIOMETERS
2-Gang 20K Log Volume Control **£26.20**
2-Gang 10K RD Special Balance, zero crosstalk and less than 10% loss in centre position **£26.98**

TOROIDAL MAINS & OUTPUT TRANSFORMERS for EL34, 32W VALVE AMPLIFIER

Special set of toroidal transformers, 2 output & 1 mains for the "Hot Audio Power" valve amplifier design described in the Oct. 1995 issue of "Wireless World". Total Wt 4.8Kg. Special price for the set. £99, Post £8
RJM1. Photocopies of the Article by Jeff Macaulay. £2

PRECISION Triple Purpose TEST CASSETTE TC1D.

Are you sure your tape recorder is set up to give its best? Our latest triple purpose test cassette checks the three most important tape parameters without test equipment. Ideal when fitting new heads. A professional quality, digitally mastered test tape at a price anyone can afford.
Test Cassette **TC1D**. Our price only **£9.99**

SHUNT FEEDBACK PICKUP PREAMPLIFIER

If you want the very best sound out of vinyl discs then you need our high quality preamplifier with Shunt Feedback equalisation. The K1450 also has an advanced front end, specially optimised for low impedance moving coil cartridges as well as moving magnet types. Selected discrete components are used throughout for ultimate sound quality. The combination of John Linsley Hood design, high quality components and an advanced double sided printed circuit board layout make this a product at the leading edge of technology that you will be proud to own. A recent review in "Gramophone" magazine endorsing this view. Bought in kit form our step by step instructions it is very easy and satisfying to assemble, or you can buy a factory assembled version if you wish.
This magnificent kit, comes complete with all parts ready to assemble inside the fully finished 228 x 134 x 63mm case. Comes with full, easy to follow, instructions as well as the Hart Guide to PCB Construction, we even throw in enough Hart Audiograde Silver Solder to construct your kit!
K1450 Complete Kit **£116.58**
K1450SA Audiophile Kit **£138.94**
A1450SA Factory assembled Audiophile unit **£188.94**

"CHIARA" HEADPHONE AMPLIFIER.

Highest quality, purpose designed, 'single ended' class 'A' headphone amplifier for 'stand alone' use or to supplement those many power amplifiers that do not have a headphone facility. Easy installation with special signal link-through feature, the unit uses our 'Andante' Ultra High Quality power supply.
Housed in the neat, black finished, Hart minibox it features the wide frequency response, low-distortion and 'musicality' that one associates with designs from the renowned John Linsley Hood. Volume and balance controls are Alps "Blue Velvet" components. Very easy to build, or available factory assembled, the kit has very detailed instructions, and comes with Hart audiograde silver solder. A valuable personal listening option and an attractive and harmonious addition to any hifi system.
K2100 Complete Standard Kit **£112.50**
K2100SA 'Series Audiophile' Kit with selected audiophile components **£115.46**
A2100SA 'Series Audiophile', Factory Assembled **£115.46**
CM2100 Construction Manual **£2.50**

"Andante" Linear Technology AUDIOPHILE POWER SUPPLIES

The HART "Andante" series power supplies are specially designed for exacting audio use requiring absolute minimum noise, low hum field and total freedom from mechanical noise.
Utilising linear technology throughout for smoothness and musicality makes it the perfect partner for the above units, or any equipment requiring fully stabilised ±15v supplies.
There are two versions, K3550 has 2 ±15v supplies and a single 15v for relays etc. K3565 is identical in appearance and has one ±15v. Both are in cases to match our 'Chiara' Headphone Amplifier and our K1450 "Shunt Feedback" Pickup preamp.
K3550 Full Supply with all outputs **£94.75**
K3565 Power Supply for K1450 or K2100 ..... **£84.42**
A3550 Factory Assembled Full Supply **£147.25**

SPEAKER DESIGN SOFTWARE.

VISATON "Speaker Pro 6" is a complete speaker design program for use on IBM machines. Covers cabinet and crossover design and contains a full expandable database of drive units. Earning a "most reccommendable" accolade it tests this program is ideal for the professional speaker builder or serious audiophile.
0303 Speaker Pro 6. 3.5"Disk **£45.51**
0309 Demo Version with Database **£9.28**

SPEAKER DAMPING MATERIALS

Polyester Wool and Pure Lambs Wool both have optimal damping properties and are pleasant to handle. Standard 125g bag is sufficient for 20 litres enclosure volume.
5070 Polyester Wool. 125g **£3.20**
5069 Pure Lambs Wool. 125g **£6.73**

ROARING SUBWOOFER.

A full revised kit will be available soon for this excellent and imaginative design from Russel Bredon (WW Feb.97). The latest design will use the 30mm maximum cone displacement of the 10" VISATON GF250 Driver to give even better performance at slightly reduced cost. Featuring a rubber suspended fibreglass cone, extended pole plate, vented magnet, Kapton carrier and dual 4ohm voice coils the GF250 is unbelievably good value at only **£111.45** each.

SPECIAL OFFER!. SOLENOID CONTROLLED FRONT LOAD CASSETTE DECK SFL800

High quality (0.08%W&F) cassette mechanism with capability of using standard or downstream monitor R/P head. Offers all standard facilities under remote, logic or software control. The control requirements are so simple that for many applications not needing all functions manual switches will suffice. Power requirements are also simple with 12v solenoids and 12v speed controlled Motor, total power requirement being under 300mA. Logic control and wiring circuits are included free with each deck.
SFL800 Deck with Standard stereo head **£29.50**
SFL800D Fitted with High Quality Downstream monitor head. **£44.90**
(The Head alone is normally over £60!)

HART TECHNICAL BOOKSHELF
Try us for:- Bigger Range of Books, Better Prices, NO "28 Day Wait"

"AUDIO ELECTRONICS" John Linsley Hood **£18.99***
"THE ART OF LINEAR ELECTRONICS" John Linsley Hood. 1994 ..... **£16.95***
"THE ART OF ELECTRONICS" Horowitz & Hill **£35.00***
"DIGITAL AUDIO AND COMPACT DISC TECHNOLOGY" 3rd.Edn. 0-240 51397 5 ..... **£19.95***
"INTRODUCING DIGITAL AUDIO CD, DAT AND SAMPLING" ISBN 1870775 22 8 ..... **£7.95**
"ACTIVE FILTER COOKBOOK" Don Lancaster **£19.95**
"THE ART OF SOLDERING" 0-85935-324-3. 0 ..... **£3.95**
"TOWERS' INTERNATIONAL TRANSISTOR SELECTOR" 0-572-01062-1 ..... **£19.95***
"AUDIO" F.A.Wilson. BP111 ..... **£3.95**
"HOW TO USE OSCILLOSCOPES & OTHER TEST EQUIPMENT" R.A.Penfold. BP267 ..... **£3.50**
"THE HART PRINTED CIRCUIT BOARD CONSTRUCTION GUIDE." **£2.50**
"A SIMPLE CLASS A AMPLIFIER" J.L.Linsley Hood M.I.E.E. 1969. RLH12 ..... **£2.75**
"CLASS-A POWER" Single Ended 15W Amp. J.L.Linsley Hood M.I.E.E. 1996. RLH13 ..... **£2.50**

LOUDSPEAKERS; THE WHY AND HOW OF GOOD REPRODUCTION. G.Briggs. 1949. ..... **£8.95**
"THE LOUDSPEAKER DESIGN COOKBOOK" Vance Dickason. (5th Edn.) **£23.95***
ELECTROSTATIC LOUDSPEAKER DESIGN AND CONSTRUCTION Ronald Wagner BKT6 ..... **£15.95**
"THE ELECTROSTATIC LOUDSPEAKER DESIGN COOKBOOK" Roger P.Sanders. 1995 ..... **£24.95**
"BULLOCK ON BOXES" Bullock & White **£10.95**
"AN INTRODUCTION TO LOUDSPEAKERS & ENCLOSURE DESIGN" V. Capel. BP256 ..... **£3.95**
"LOUDSPEAKERS FOR MUSICIANS" BP297 ..... **£3.95**
"THEORY & DESIGN OF LOUDSPEAKER ENCLOSURES" J.E.Benson **£21.95**
"QUICK & EASY TRANSMISSION LINE SPEAKER DESIGN" Larry D.Sharp **£8.95**
"THE COUPLED CAVITY HANBOOK" David Purton **£4.90**
"VISATON. HOME HI FI CATALOGUE." Full Specifications and Thiele Small Data on all Drive Units **£4.50**
"VISATON. CAR HI FI CATALOGUE." In car guide **£3.50**
"VISATON. CABINET PROPOSALS" Book 1. In GERMAN **£6.50**
"VISATON. CABINET PROPOSALS" Book 2. In GERMAN **£6.50**
"SPEAKER PRO 6." VISATON Cabinet Design Software. . **£45.51**
"SPEAKER PRO 6." Demo Version with drive unit database **£9.28**

"VALVE AMPLIFIERS" Morgan Jones. 1995/6 ..... **£24.50**
THE VTL BOOK David Manley 1994. BKVT1 ..... **£17.95**
MULLARD TUBE CIRCUITS FOR AUDIO AMPLIFIERS BKAA27 ..... **£11.95**
"THE WILLIAMSON AMPLIFIER." 0-9624-1918-4 ..... **£6.95**
AN APPROACH TO AUDIO FREQUENCY AMPLIFIER DESIGN. GEC 1957 ..... **£17.95**
AUDIO ANTHOLOGIES, articles from Audio Engineering. Six volumes covering the days when audio was young and valves were king!. BKAA3/1 to 6. ..... All **£12.95** each
"THE RADIOTRON DESIGNERS HANDBOOK" (CD) **£49.00**
"PRINCIPLES OF ELECTRON TUBES" H.D.Reich PH.D. **£25.95**
"POWER AMP PROJECTS" Anthology. 1970-1989. ..... **£15.50**
"WORLD TUBE DIRECTORY" 1996-7 Sourcebook of valve related products **£5.95**
Fuller descriptions of the contents of all our books is given in our full catalogue, price **£4.50**

Postage on all books, unless starred, is only £2 per book, maximum **£4.50** for any number, any size!. Starred items are heavy books costing £3.50 to send.
Don't forget No waiting at HART!. All listed books are normally in stock!. Just ring with your Credit Card Number for instant despatch!.

POSTAGE on UK Orders up to £20 is £2. Over £20 is £4.50.
OVERSEAS Please Enquire.
Fuller Details of ALL kits are given in our List, FREE on request.

Send for Your FREE copy of our LISTS

24 Hr. ORDERLINE 01691 652894
Fax. 01691 662864

All Prices include UK/EC VAT.

HART ELECTRONIC KITS LTD.
1 Penylan Mill, OSWESTRY, Shrops. SY10 9AF. UK

CIRCLE NO. 127 ON REPLY CARD

Noise

Noise comes in all shapes and sizes – and colours. Ian Hickman looks at some of the many varieties, and their fascinating properties.

Noise is all around us. The acoustic variety can be intrusive, but the electrical sort rarely worries the average person. Except, that is, when an unsuppressed car passes too near a tv aerial, or a noisy line stops the person at the other end of the phone from being heard.

For the electronic engineer though, noise is a different matter. Obviously, the communications engineer is concerned with noise, whether working in line or wireless-communications. But light-current engineers in all fields are affected, since their work inherently involves the transport and processing of information by electrical means.

Noise – the basics

Noise comes in many guises – thermal, Gaussian, baseband, broadband, narrowband, stationary, white, pink, impulsive, blue, red, non-stationary. And there's a few others.

Thermal noise – also called Johnson noise or resistor noise – is inherent in all systems operating at a temperature in excess of absolute zero, i.e. 0K or –273°C. In a conductor, the electrons are in continuous random motion, in equilibrium with the molecules of the conducting material.

The mean-square velocity of the electrons is proportional to the absolute temperature. As each electron carries a negative charge, each electron trajectory between collisions with molecules constitutes a brief pulse of current.

As you might expect, the net result of all this activity is observable as a randomly varying voltage across the terminals of the conductor. Obviously the mean value – or dc component – of this voltage is zero, otherwise electrons would be piling up at one end of the conductor. But there is an ac component, described by the Equipartition Law of Boltzmann and Maxwell. This law states that for a thermal noise source, the available power $p_n(f)$ in a 1Hz bandwidth is given by,

$$p_n(f) = kT \text{ (watts/Hz)} \quad (1)$$

where k is Boltzmann's constant, which is 1.3803×10^{-23}joule/K, and T is the absolute temperature of the noise source in kelvins. At room temperature, i.e. 290K or 17°C , this turns out to be,

$$p_n(f)=4.00\text{x}10^{-21} \text{ (watts/Hz)}$$
$$=-204\text{dBW/Hz}$$
$$=-174\text{dBm/Hz} \quad (2)$$

In $p_n(f)$, the (f) indicates that the noise power per unit bandwidth is, in general, a function of frequency. In the case of thermal noise, the power per unit bandwidth is in fact constant. As a result, thermal noise is described as 'white', by analogy with white light, which contains components at all frequencies or colours.

At room temperature, the value of $p_n(f)$ quoted at (2) is found to hold up to the highest microwave frequencies at which it has been possible to measure it. But if the bandwidth were truly infinite, the equipartition theory would predict that the power available from a thermal source would be infinite.

The solution to this paradox is provided by the application of quantum mechanics, which theory requires the kT of the equipartition theory to be replaced by $hf/(\exp\{hf/kt\}-1)$, where h is Plank's constant, which is 6.623×10^{-34} (joule.seconds). This results in a modified expression for $p_n(f)$ of,

$$p_n f = \frac{hf}{\exp\left(\frac{hf}{kT}\right)-1} \text{ (watts / hertz)} \quad (3)$$

This expression results in thermal noise actually tailing off at very high frequencies, as illustrated in **Fig. 1**. This shows that the spectral density of thermal 'white' noise from a source at room temperature has fallen to about 90% of the low frequency value by about 1250GHz. But for a low temperature amplifier such as a maser operating at one degree above absolute zero, the thermal noise is already 10% down at just 5GHz.

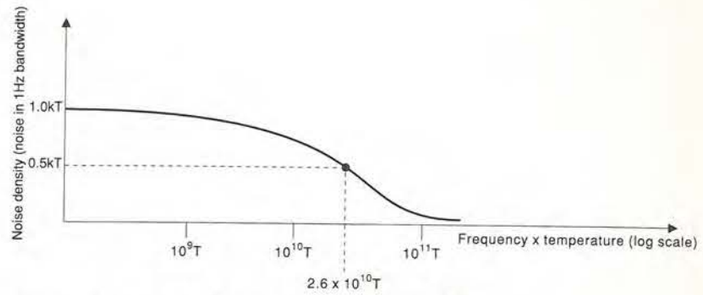

Fig. 1. The level of thermal 'white' noise falls off above a certain frequency which depends upon the temperature.

Thermal noise model

Figure 2 shows how a resistive noise source may be modelled. Maximum noise power is delivered to R_1 when its value equals R. But there is no *net* transfer of power because R_1 in turn delivers an equal amount of noise power back to R. Note that in Fig. 2, v_n is that component of the noise appearing across R_1 due to the noise voltage e_n of source resistance R only.

As measured, v_n will be larger than this, due to the component of noise across R due to the thermal noise of R_1. There is no correlation between this component and the component across R_1 due to R. Consequently, the voltage v_n' actually measured across R, or R_1, will be the *rms sum* of the two components. So in general,

$$v_n' = \sqrt{\left(\frac{R_1}{R_1+R}e_{n1}\right)^2+\left(\frac{R}{R_1+R}e_{n2}\right)^2}$$

If R_1=R, then v_n'=1.414v_n.

For instance, R may be the source resistance of an antenna. In this case, a wanted signal e_s appears in series with e_n. The ideal signal-to-noise ratio available is thus e_s/e_n. R_1 may be the input resistance of an amplifier.

In the matched case where R_1=R, the amplifier sees an input signal $e_{input}=e_s/2$. But the effective source resistance is now R in parallel with R_1, or effectively $R/2$ in the matched case. So the matched-input amplifier sees not $e_n/2$ at its input but,

$$e_n = \left(\sigma_n\sqrt{2\pi}\right)^{-1}\exp\left(\frac{-e_n^2}{2\sigma_n^2}\right) \quad (4)$$

Thus the matched case incurs a 3dB noise figure, even if the amplifier itself is noiseless.

If the amplifier has a high input impedance, so that R_1 is much greater than R, the theoretical stage noise factor $(R_1+R)/R_1$ can approach unity, for a noise-free amplifier. The relatively low resistance of the source effectively shorts out the noise of the amplifier's high input resistance.

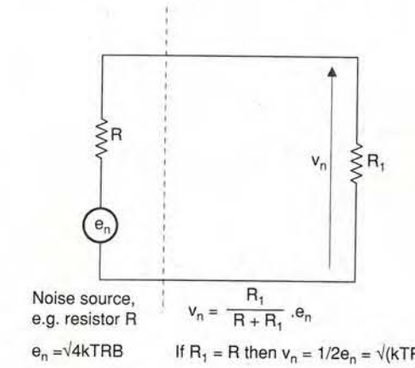

Fig. 2. Thermal noise of a resistor R can be modelled as a noise source e_n in series with it.

Random noise characteristics

A source of noise may, or may not, be white like the thermal noise considered above. But most sources of noise, including thermal noise, exhibit the same shape of noise voltage probability density, nvpd.

Figure 3 shows a sample of the variation of baseband noise over a period of time. The greater part of the time, the voltage is not greatly different from the mean value of zero, but peaks of either polarity occur, the larger the value of the peak the less frequently it is observed. This distribution is described as Gaussian, and the probability of the occurrence of any particular instantaneous value of voltage e_n is given by,

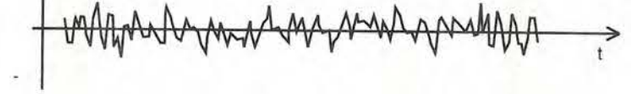

Fig. 3. A short sample of broadband noise.

$$p(R) = \frac{R}{\sigma^2}\exp\left(\frac{-R}{2\sigma^2}\right) \quad (5)$$

This expression is plotted as the Gaussian or Normal distribution in **Fig. 4**, which indicates that however large a peak voltage you care to specify, if you wait long enough it will eventually occur. However, the exponential function is a very powerful one, so that the likelihood of the occurrence of a peak of, say, twice the amplitude of the largest shown is exceedingly remote.

The value σ_n in the previous equation is the standard deviation of the voltage from the mean. In practice, the mean is usually zero – as in the case of thermal noise. Incidentally, the noise may be riding a dc level, as at the output of an amplifier, but this is usually dc blocked before application to the next stage. Strictly speaking, the noise is then no longer baseband noise, being in effect high-pass filtered with some – generally low – cut-off frequency.

The value σ_n is not only the standard deviation of the noise voltage, it is also the rms value of the waveform. While the peak value of a sine wave is exactly $\sqrt{2}$ times the rms value, there is no hard and fast limit in the case of noise.

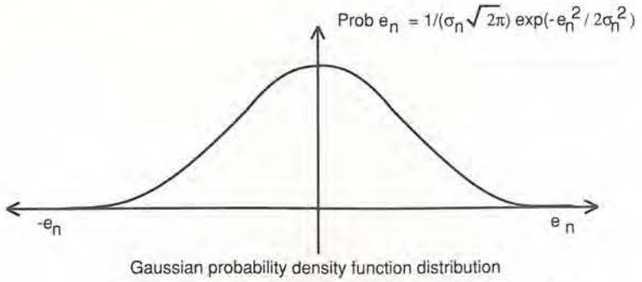

Fig. 4. The amplitude distribution of Gaussian white noise, showing how the larger the amplitude, the less likely it is to occur.

Some circuits have to handle a noise-like signal, as for example in fdfm, or frequency-division frequency-multiplex telephony. In such cases it is necessary to design for a headroom of four or five sigma i.e. four or more times the rms amplitude of the noise.

Signal magnitudes greater than four σ occur for less than 0.01% of the time, so although overloading will occur, it is very infrequent. Thus the peak factor for an amplifier which must handle a random noise-like signal is x4 or 12dB. The peak factor – i.e. peak value over rms value – for a sinewave is, as noted above, √2 or 3dB. Thus the power handling capacity of an amplifier which must handle a random noise-like signal is 9dB less than for a sinewave.

Colourful noise

Thermal noise can be described as Gaussian white noise. Noise in semiconductor devices approximates to a Gaussian white characteristic over a limited range.

Active devices such as transistors and op-amps depart from this at both ends of the spectrum. At low frequencies, the noise increases relative to that at mid-frequencies. Its level eventually becomes inversely proportional to frequency, below the '1/*f* noise corner frequency'. Depending on the device, the 1/*f* corner frequency may be anything from tens of kilohertz down to a few hertz or less.

Being out of band, 1/*f* noise is usually no problem in an rf amplifier stage. But in an oscillator, the non-linearity inherent in oscillator action results in the active device's 1/*f* noise being cross-modulated onto the oscillator's rf output, as close-in noise sidebands.

White noise, with its constant power per unit bandwidth, may be filtered to produce a level which is no longer independent of frequency. Pink noise is noise with an amplitude which falls with increasing frequency, at a rate of 3dB/octave. It possesses the characteristic of constant power per octave, and is used in audio testing.

Red noise falls at 6dB/octave, and as such matches the signal handling capacity of a delta modulator. It may used in such a circuit to simulate voice loading, since the higher frequency – i.e. unvoiced – components of speech such as sibilants are at a relatively much lower level than the lower frequency voiced components. By analogy, noise whose level *rises* at 6dB per octave may be described as blue noise, but I have yet to come across any practical application for it.

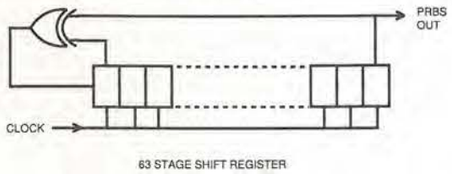

Fig. 5. Clocked at around 10MHz, the pseudo-random bit-stream from a 63 stage pseudo-random binary sequence generator repeats every 32 000 years.

Pseudo random sequences

PRBS – or pseudo random binary pulse sequence – generators make a convenient source of baseband noise, within certain limitations.

The output approximates a white distribution up to $f_c/2\pi$, i.e. about one sixth of the clock frequency. It actually consists of a series of discrete spectral lines, being the fundamental and harmonics of the frequency $f_f=f_c/(2^n-1)$. Here, n is the number of stages in the shift register – assumed large.

The feedback is arranged to produce a maximal length pseudo-random sequence, which repeats after 2^n-1 clock cycles. But while approximately white from f_f to $f_c/2$, the output is not Gaussian, consisting of a pseudo-random sequence of logic ones and zeros.

It can be rendered approximately Gaussian by passing it through a single-pole low-pass filter with a cut-off frequency of f_c/n. Now, due to the heavy filtering. the rarer longer runs of ones and zeros have a chance to build up to larger peaks, compared with the lower amplitude of successive reversals.

Figure 5 illustrates a baseband noise generator using a prbs. The pseudo-random sequence of ones and zeros that it generates repeats after $2^{63}-1=9.223\times10^{18}$ clock cycles. If it is clocked at 9.223MHz, the sequence of ones and zeros repeats after some 10^{12} seconds – or about every 32 000 years. With 10^{12} discrete spectral lines in each 1Hz of bandwidth, it clearly represents a very good approximation to the continuous spectrum of white noise, up to $F_{clock}/2\pi$ or about 1.5MHz.

For a Gaussian distribution, it should be low-pass filtered with a cut-off frequency of $F_{clock}/63$ or less, say 100kHz. Clearly, as an audio frequency noise generator, a 63 stage shift register is wild overkill. However, it is one of the shift register lengths where a 2^n-1 maximal length sequence can be obtained using a single exclusive-or gate connected to the appropriate tappings, in this case, stages 1 and 63. Certain other lengths share this property, which results from the describing polynomial having only three non-zero terms – a trinomial.

Reference 1 describes an audio frequency noise generator using a more modest shift register of 31 stages. Suitable inputs to the exclusive-or gate to achieve a $2^{31}-1$ maximal length sequence of 2 147 483 646 clock cycles are taken from stage 13 and the last stage.

Clocked at a modest 220kHz, the pattern repeats after about 2.7 hours. A higher clock frequency would be needed if audio frequency Gaussian noise – white up to 20kHz – was wanted. But this design was for a source of pink noise only, the pink noise filter ensuring a near-Gaussian distribution. Actually, two filters were used, providing two output channels. These could either be from the same sequence of ones and zeros in the same phase – 'mono' mode – or one with the sequence inverted, in 'inverse-polarity' mode, or in 'stereo' mode. In the latter case, an additional exclusive-or gate is used to derive a time-shifted version of the sequence, which is thus, for practical purposes, uncorrelated with the other channel.

The necessary power supply need consist of nothing more than a 9V 6F22 style layer type battery, a PP3 for example, plus a decoupling capacitor. The circuit is reproduced here as **Fig. 6**.

Where a simple single channel source of audio noise is required, there is little to beat that handy chip, the *MM5437*, from National Semiconductor. This was featured some while ago in an article in these pages, reference 2. This eight-pin plastic DIL device incorporates a 23-stage shift register and

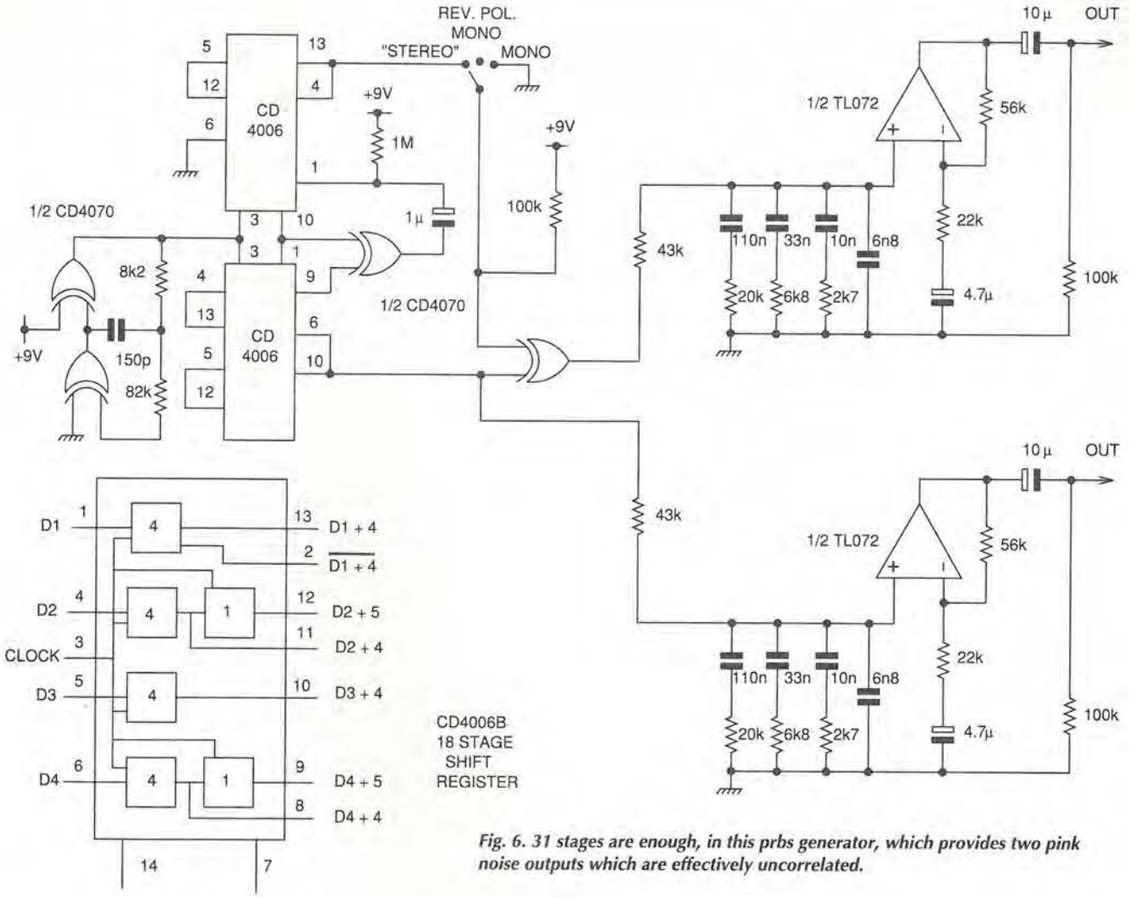

Fig. 6. 31 stages are enough, in this prbs generator, which provides two pink noise outputs which are effectively uncorrelated.

requires just a 5V supply to give a white noise output – i.e. a pseudo-random bit-stream, using its own internal clock generator. Alternatively, an external clock may be used, and the addition of a single-pole low-pass filter – one resistor and one capacitor – gives you noise with an approximately Gaussian distribution.

Narrow band noise

Narrow band noise may be defined as noise covering much less than one octave. Relative to a centre frequency F_c, assume that it extends over the range $-F$ to $+F$. Then if $2F<F_c/10$, it may be considered as narrow band noise.

Narrow band noise is of particular interest to the radio engineer, as the signal presented to a receiver's detector – frequency discriminator, phase detector or whatever – will be accompanied by only that bandwidth of noise that can pass through the IF filter.

Narrow band noise, thus defined, has interesting properties, since unlike baseband noise, it is not a 'real' signal. All of the information about a real signal can be conveyed on a single circuit – a single wire, plus an earth return, of course. As narrow-band noise is a complex signal, it can only be completely described, i. e. in both amplitude and phase, by considering both of two separate components; in-phase and quadrature.

Figure 7 shows a set-up for producing a narrow band of noise, 2kHz wide, centred on 10MHz. Assuming the mixer is perfectly balanced, there is no component of the 10MHz carrier frequency present in the output.

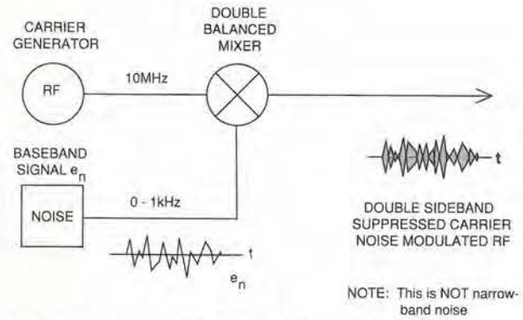

Fig. 7. This circuit produces dsbsc modulated noise, which is not the same thing as narrow band noise.

The noise power per unit bandwidth is constant over the range 9.999MHz to 10.001MHz, with a roll-off above and below those frequencies identical to the roll-off of the 1kHz baseband filter used to define the width of the baseband noise. However, the resultant narrow band noise bears no resemblance to naturally occurring narrow band noise.

As Figure 7 shows, every time the baseband noise waveform crosses the zero voltage axis, there is a zero in the amplitude of the 10MHz-centred narrow band noise. Between these zeros, or cusps of the rf, the phase of the signal is coherent, whilst at each cusp there is an instantaneous

phase reversal of exactly 180°.

Figure 8a), which has appeared earlier as Fig. 4, describes in statistical terms the distribution of the baseband noise, but it does not describe the distribution of the rms value of the narrow-band rf noise. To illustrate true narrow band noise, imagine a second mixer, whose output is added to that of the mixer output in Fig. 7. Further, assume that the second mixer is fed from the same rf generator, but with 10MHz shifted in phase by 90°. Also, assume that the 0 to 1kHz baseband noise fed to the second mixer comes from an entirely different source, having zero correlation with the noise fed to the first mixer. The distributions of the in-phase and quadrature noise sources are sketched in three dimensions in Figure **8b)**.

Now, instead of the phase of the 10MHz noise being either zero or 180°, it can take any value over 0 to 360°, with equal probability. The fact that the two baseband noise sources were supposed uncorrelated leads to an intriguing paradox.

Although clearly the most likely value of the baseband voltage at any instant is zero, voltages just either side are almost as likely, only becoming very unlikely at plus or minus two or three sigma or more. But because the baseband noise waveforms have zero correlation, the likelihood of one being *exactly* zero at the *same instant* as the other passes through zero, is *vanishingly small*, i.e. zero.

Consequently, there are dips in the envelope of the noise, and these are more cusp-like the deeper they are, as illustrated in **Fig. 9**. There is zero probability of a complete drop-out. This waveform simulates exactly true narrow band random noise, the rms value of which exhibits a 'Rayleigh' distribution, sketched approximately in **Fig. 10**. The Rayleigh probability $p(R)$ is given by,

$$p(R) = \frac{R}{\sigma^2}\exp\left(\frac{-R}{2\sigma^2}\right)$$

Unlike baseband noise where the rms value is σ, the rms value of narrow band noise with its Rayleigh distribution is $\sqrt{2}\sigma$.

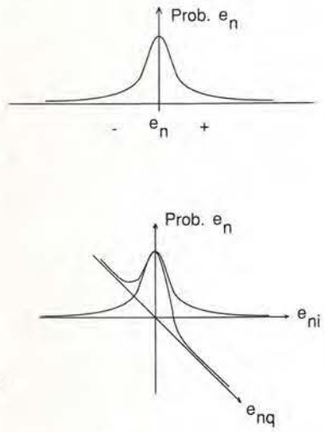

Fig. 8a). Voltage probability distribution of a real signal – same as Fig. 4. b) Voltage probability distribution of the in-phase and quadrature components of a narrow band noise – a complex signal.

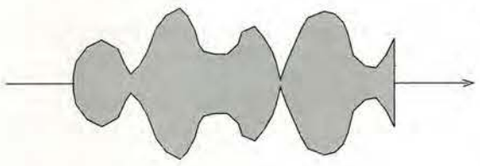

Fig. 9. Illustrating the envelope of narrow band noise, see text.

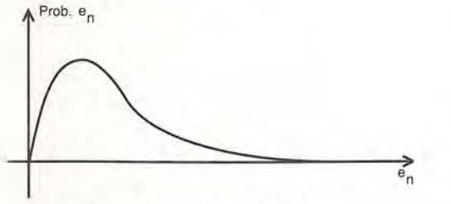

Fig. 10. The Rayleigh distribution.

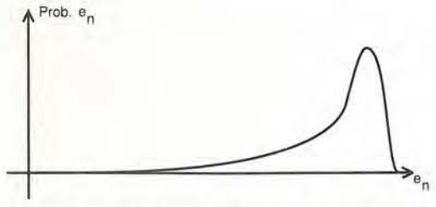

Fig. 11. Ricean distribution.

The noisy signal

A noisy signal may be considered, in the simplest state, to be a steady state continuous-wave signal plus narrow-band noise. The cw could be, for example, the mark tone of an fsk signal. As the level of the cw relative to noise is increased, from a signal to noise ratio of minus infinity decibels, the Rayleigh distribution starts to change.

Very low values become less and less likely, while as the signal-to-noise ratio becomes positive and then large, the distribution narrows down towards the amplitude of the cw. This is called Ricean distribution, as outlined in **Fig. 11**, and describes the signal at the back end of a receiver's IF strip, just before the detector.

The noise accompanying the signal may have been picked up by the antenna, or it may be the front-end noise of the receiver. Either way, it will have been band limited by the selectivity built into the IF strip.

Stationary, or not?

The Ricean distribution, like the Rayleigh, assumes the noise in question is 'stationary'. All the types of noise considered so far have been stationary, that is to say their characteristics have been continuous, unvarying, their statistics independent of time.

Certain types of noise are non-stationary, the most obvious example being impulsive noise. This is typically due to a number of causes, including vehicle ignition systems, electrical machinery and switches, and meteorological electrical activity.

For signals having a large amount of redundancy, for example speech, impulsive noise is mainly just a nuisance. But in a data link carrying digital information, its effect can be devastating.

Such links therefore usually incorporate at least an error-detection algorithm. A parity bit per eight-bit ASCII character is the simplest form, but this will not detect a double error. Consequently, more complicated schemes such as Reed-Soloman, etc., often incorporating error correction in addition – are usually required.

Carrier noise

In a wireless communications link employing phase modulation – digital phase-shift keying and the like – various sources of noise contribute to the final bit-error rate achieved.

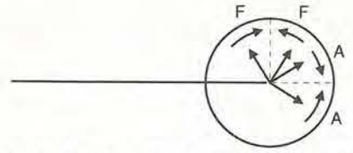

Fig. 12. Illustrating an ideal noise free cw carrier, with, at its tip, amplitude and frequency-modulated noise sidebands.

The most obvious is noise picked up by the antenna, or due to the noise figure of the receiver's input stage or stages. Another is the phase noise of the carrier on to which the transmitter modulates the data, and yet another the phase noise of the local oscillator in the receiver. Consequently, however large the received signal, there is usually a small but finite irreducible bit error rate, hopefully much less than 1 in 10^4 and often of the order of 1 in 10^7 in a well designed system.

Figure 12 shows exaggeratedly how the output of an oscillator exhibits random noise side-bands, resulting in both residual noise amplitude modulation and residual noise frequency modulation. Frequently, the amplitude of the amplitude-modulated noise side-bands is negligibly small relative to the fm noise side-bands. But in any case they are irrelevant in an fm or phase-modulated link, where a limiting IF strip is used.

Figure 13 sketches a typical oscillator output, and indicates that beyond a certain distance from the carrier, there is a flat noise 'floor'. In a high quality crystal oscillator, this may be at –140dBc – i.e. 140dB below the carrier power – from as close in as 10Hz offset. In an *LC* oscillator, the noise floor may be only 90dB down or even less, with this level not being reached until an offset of perhaps as much as 100kHz.

Figure 14 shows how noise sideband power is defined. It is the level, measured in a 1Hz bandwidth, relative to the total carrier power, as a function of the offset from the centre frequency f_0. **Figure 15** shows in more detail the various components of sideband noise. In practice, the various stages are often not discernably distinct, tending to run into each other.

The carrier voltage, complete with the noise modulation, is described by the expression,

$$v(t) = V_s\cos\left(2\pi f_o t + \Delta\phi(t)\right) \qquad (7)$$

where V_s is the peak value of the carrier. This expression assumes that the am noise is negligible compared to the phase noise. Function $\Delta\phi$ of t is the randomly fluctuating phase noise term.

Is it noise?

Or is there some cw signal there? In a few specialised applications it is important to know whether for example the IF signal in a surveillance receiver is pure noise, or whether there is also a weak continuous-wave signal lurking in there somewhere.

Assume the IF is at $F_o=(\omega_0/2\pi)$Hz, and that the bandwidth B is $2\omega_b/2\pi$Hz centred on ω_0. Assume further that $\omega_0>>\omega_b$ and that the filter shape approximates a rectangular – or brick-wall – shape. Then the variance of the number of zero crossings N of the hard-limited signal, if purely noise, in a sample time T(seconds) for the case where $BT>>1$ is given by,

$$VAR[N(T)] \cong 0.62\frac{2\omega_b T}{2\pi} \qquad (8)$$

so the standard deviation is,

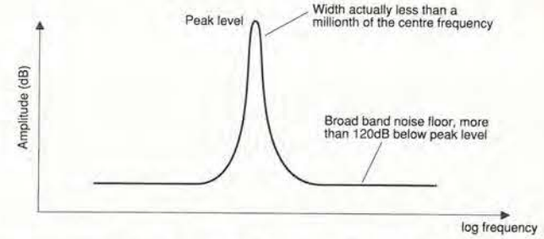

Fig. 13. The spectrum resulting from Fig. 12 looks something like this.

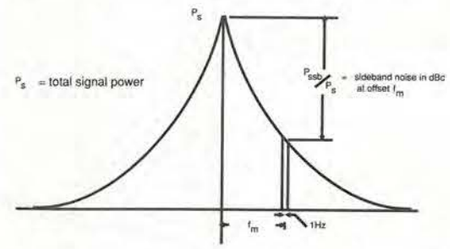

Fig. 14. Defining sideband noise L_{fm}.

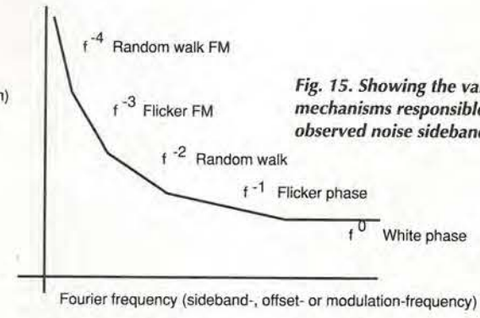

Fig. 15. Showing the various mechanisms responsible for the observed noise sidebands.

$$\sigma[N(T)] \cong 0.782(BT)^{\frac{1}{2}} \qquad (9)$$

This is an important result that can be found in reference 3.

In the event that the standard deviation over a number of sample periods each of T seconds is significantly less than this, then a continuous-wave signal must be present. Reference 3 also gives an expression for VAR[$N(T)$] for the Ricean case, the sum of an unmodulated carrier plus narrow band noise. ■

References

1. Muller, B, 'A Stereo Noisemaker,' *Speaker Builder*, April 1984.

2. See 'Making a right white noise' Ian Hickman Wireless World March 1992 pp. 256, 257, with four useful references to articles giving the feedback connections for maximal length sequences, for various length shift registers. Reproduced in 'The Analog Circuits Cookbook,' Ian Hickman, Newnes 1995 ISBN 0-7506-2002-1.

3. 'Angle Modulation' by J H Roberts 1977 Peter Peregrinus Ltd. ISBN 0 901223 95 6.

Interfacing with C

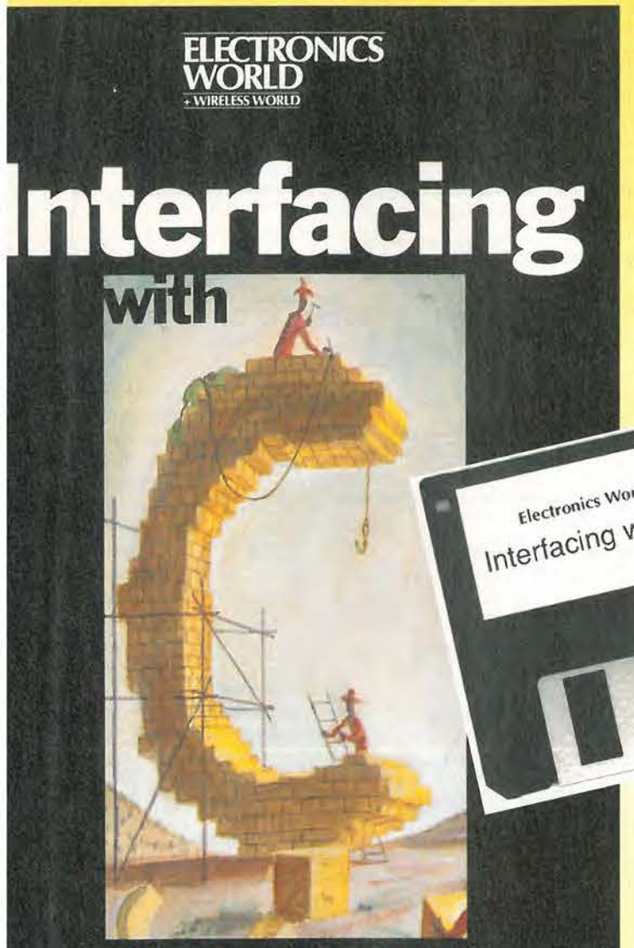

Without an engineering degree, a pile of money, or an infinite amount of time, the revised 289-page Interfacing With C is worth serious consideration by anyone interested in controlling equipment via the PC. Featuring extra chapters on Z transforms, audio processing and standard programming structures, the new Interfacing with C will be especially useful to students and engineers interested in ports, transducer interfacing, analogue-to-digital conversion, convolution, digital filters, Fourier transforms and Kalman filtering. Full of tried and tested interfacing routines. Price £14.99.

Listings on disk – over 50k of C source code dedicated to interfacing. This 3.5in PC format disk includes all the listings mentioned in the book Interfacing with C. Note that this is an upgraded disk containing the original Interfacing With C routines rewritten for Turbo C++ Ver. 3. Price £15, or £7.50 when purchased with the above book.

Especially useful for students, the original Interfacing with C, written for Microsoft C Version 5.1, is still available at the special price of £7.50. Phone 0181 652 3614 for bulk purchase price.

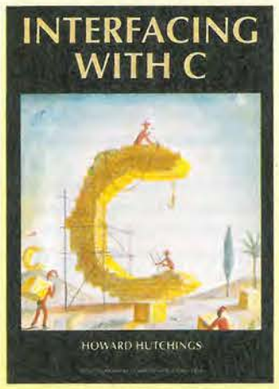

Use this coupon to order

Please send me:

Title	Price	Qty	Total
Enhanced Interfacing with C book @	£14.99	.....	£.....
Enh. Interfacing with C book + disk @	£22.49	.....	£.....
Interfacing with C disk @	£15	.....	£.....
Original Interfacing with C book @	£7.50	.....	£.....
Postage + packing per order UK	£3.50	.....	£.....
Postage + packing per order Eur	£7		£.....
Postage + packing per order ROW	£12		£.....
Total			£.....

Name

Address

Phone number/fax

Make cheques payable to Reed Business Publishing Group Ltd
Or, please debit my Master, Visa or Access card.

Card type (Access/Visa) Card No
Expiry date

Mail this coupon to Electronics World Editorial, Quadrant House, The Quadrant, Sutton, Surrey, SM2 5AS, together with payment. Alternatively fax full credit card details with order on 0181 652 8956 or e-mail them to jackie.lowe@rbp.co.uk. Orders will be dispatched as quickly as possible, but please allow 28 days for delivery.

MICROWAVE

Continental Mic	Transmitter Control VML TR-240-1/1	£750.00
Digital Microwave	12Ghz TX/RX (new)	£1,200.00
HP H 752A	Directional Coupler 3dB	£150.00
HP X 382A	Variable Attenuator 0-50dB 8.2-12.4GHz	£120.00
HP11691D	Dual Directional Coupler	£600.00
HP11692D	Dual Directional Coupler	£700.00
HP11720A	Pulse Modulator 2-18GHz	£720.00
HP11722A	Sensor Module	£600.00
HP33304A	Programmable Attenuator 18GHz 0-11dB	£175.00
HP33305A	Programmable Attenuator 18GHz 0-110dB	£175.00
HP33320A	Attenuator 11dB	£250.00
HP33320B	Attenuator 21dB	£250.00
HP33322A	Attenuator 1210dB	£250.00
HP3350	VHF Attenuator 120dB DC-1GHz	£300.00
HP3575A	Gain Phase Meter	£650.00
HP5328	Frequency Meter	£200.00
HP536A	Frequency Meter 3.7-12.4Ghz	£200.00
HP54111A	2Ghz-S/S Test Set	£560.00
HP8405A	Vector Volt Meter	£250.00
HP8410B		£200.00
HP8414A		£175.00

GOOD SELECTION OF 18-20 GHz COAXIAL SWITCHES IN STOCK: £65.00 EACH

HP8502A	Transmission/Reflection Test Set 500KHz-1.3GHz	£750.00
HP8743B	Reflection-Transmission Test Unit 2-12.4GHz	£600.00
HP8745A	S-Parameter Test Set 0.1-2GHz	£560.00
Marconi 6019/2	Calibrated Variable Attenuator 12.4-18GHz	£200.00
Marconi 6030/10	Directional Coupler X Band	£200.00
Marconi 6052/3	Rotary Vane Attenuator 8.12-12.4GHz	£120.00
Marconi 6960+6910	Power Meter 10MHz-20GHz	£900.00
Maury Microwave	Sliding Termination 8035H up to 20GHz	£600.00
NEC	Pasolink 50 50GHz TX/RX	£500.00
Racal 9303	True RMS Level Meter	£800.00
TEK TR502	Tracking Generator	£750.00
Waveguide	X Band WG16 10ft Lengths	£30.00
Weinschel	Adaptor APC7-SMA (new)	£65.00
Wiltron	87A50 VSWR Bridge 2-18GHz	£600.00
Wiltron	64NF50 VSWR Bridge 3-8GHz	£400.00

OSCILLOSCOPES

Gould 4030	Digital Storage 20MHz 20MS/S	£350.00
Gould OS250	TV	£40.00
Gould OS300	20MHz	£120.00
HP54111D	500MHz Digital	£1,950.00
HP54200A	50MHz Digital	£750.00
HP54501A	100MHz Digital	£1,600.00
Iso-Tech	ISR640 40MHz	£300.00
Iwatsu DMS6430	Digital Memory	£475.00
Iwatsu SAS8130	Waveform Analyser DC-3.5GHz	£1,500.00
Leader	LBO-522 20MHz	£200.00
Philips	PM3217 50MHz	£350.00
Philips	PM3340 2GHz Digital	£3,000.00
Tek 2215	60MHz	£350.00
Tek 2225	50MHz	£375.00
Tek 2235	100MHz	£600.00
Tek 2236	100MHz	£750.00
Tek 2245A	100MHz	£950.00
Tek 2336	100MHz	£750.00
Tek 2430A	150MHz 100MS/S Digitizing	£3,100.00
Tek 465	100MHz	£350.00
Tek 466	100MHz	£300.00
Tek 475	200MHz	£425.00
Tek SC502	15MHz	£300.00
Tek TDS420	150MHz 4 Channel 100MS/S	£2,950.00
Telequip	D61A 10MHz	£75.00

SIGNAL GENERATORS

Adret 7100B	300KHz-650MHz	£700.00
Adret 740A	0.1-560MHz	£750.00
Cushman CE12	Two Tone Generator	£150.00
Farnell DSG2	Synthesized 0.1MHz-110KHz	£185.00
Farnell PSG1000	10KHz-1GHz	£1,200.00
Farnell PSG520	10-520MHz	£200.00
Farnell SSG520	10-520MHz	£200.00
Flann 4311A	12-18GHz	£50.00
Fluke 6010A	10Hz-11MHz Synthesised	£175.00
HP1171B	Down Convertor (HP8640B)	£275.00
HP214B	Pulse Generator 100V 2A	£1,200.00
HP3325A	Synthesizer Generator 1Hz-21MHz	£1,500.00
HP3325B	Synthesiser Generator 1Hz-21MHz	£3,000.00
HP4204A	Oscillator 10Hz-1MHz	£125.00
HP654A	Test Oscillator 10MHz	£225.00
HP8005B	0.3Hz-10MHz	£300.00
HP8008A	10Hz-200MHz	£450.00
HP8015A	1Hz-50MHz Pulse	£450.00
HP8165A	Programmable Signal Source	£1,200.00
HP8601A	Generator/Sweeper 0.1-110MHz	£350.00
HP8620C +HP86222B	0.01-2.4 Ghz Sweeper	£1,500.00
HP8642M	0.1-2100MHz	£12,500.00
HP8647A	250KHz-1000MHz	£2,300.00
HP8656A	100KHz-990MHz	£1,500.00
HP8684B	5.4-12.5GHz	£1,950.00
Marconi 2019A	80KHz-1040MHz	£1,450.00
Marconi 2022	10KHz-1GHz	£1,250.00
Marconi 6057	Signal Source 5.5-8.5GHz	£200.00
Marconi 6059A	12-18GHz Signal Source	£200.00
Marconi TF2015/2017	10-520MHz	£300.00
Racal 9053	Two Tone	£120.00
Racal 9084+9934A	0.01-104MHz	£500.00
Racal 9087	10KHz-1.3GHz	£2,300.00
Systron Donner 1702	Audio-1GHz	£600.00
Tek 504	0.001-240MHz	£350.00
Tek FG501A	2MHz Function	£250.00
Wavetek 1080	1-1000MHz Sweeper	£800.00
Wavetek 157	Programmable Waveform	£150.00
Wavetek 159	Waveform Generator 1Hz-3MHz	£300.00
Wavetek 171	Synthesizer/Function	£400.00
Wavetek 185	Sweeper/Function 0-5MHz	£350.00
Wavetek 2001	1-1400MHz	£600.00
Wavetek 907A	7-12.4GHz	£900.00
Wiltron 610D+6223B	Sweeper 4-12.4HGz	£500.00

PLOTTERS/RECORDERS

Dowty	Maritime Systems 3710	£300.00
HP	Draft Master RX	£500.00
HP Colour Pro		£45.00
HP DraFt Pro-DXL	7575A	£250.00
HP-XL	Paintjet	£50.00
HP7475A	Plotter RS232	£150.00
HP7550A	Plotter	£250.00
Racal Recorder	405 & 705	from £200.00
Roland	X-Y Plotter DXY-1300	£120.00
Roland	Drafting Plotter GRX-400AG	£500.00

AERIAL FACILITIES EQUIPMENT:
Receiver Splitter Amplifier
Type RSA-460-4M
Price: £250.00
Bandpass Duplexer,
Type BPD-453-460-6N
Price: £300.00
Transmitter Cavity Resonator,
Type SC-450-2N
Price: £190.00
Transmitter Cavity Resonator
Type SG-450-ZN c/w DT-453-2NV
Price: £190.00

DATA/TELECOMS

Anritsu	MS334A PCM Error Detector	£120.00
BT (Fulcrum)	T1020 Network Transmission Performance Analyzer	£500.00
Cushman	CE24 FX Selective Level Meter	£400
Datalab DL1000	Programmable Transient Recorder	£250.00
GN Elmi EPR31	PCM Signalling Recorder	£5,000.00
HP1350A	Graphics Translator	£200.00
HP1631D	Logic Analyzer	£650.00
HP3336A	Synthesizer/-/Level Generator	£1,300.00
HP3497A	Data Acquisition/Control Unit	£400.00
HP3586B	Selective Meter	From £850.00
HP3717A	70MHz Modulator/Demodulator	£POA
HP37201A	HP-IB Extender	£300.00
HP37204	HP-IB Extender	£300.00
HP3762A	Data Generator	£350.00
HP3763A	Error Detector	£800.00
HP3764A	Digital Transmission Analyser	£3,200.00
HP3770B	Telephone Line Analyser	£200.00
HP3780A	Pattern Generator/Error Detector	£1,100.00
HP3781A	Pattern Generator	£500.00
HP3782A	Error Detector	£500.00
HP4935A	Transmission Tester	£1,100.00
HP4984A	In-Service Transmission Impairment Measuring Set	£POA
HP50059	Signature Tester	£950.00
HP5006A	Signature Analyser	£50.00
HP6942A	Multiprogrammer	£200.00
HP8016A	Word Generator	£150.00
HP8170A	Logic Pattern Generator	£600.00
HP8954A	Tranceiver Interface	£600.00
Iwatsu DM2350	Digital Memory 10 Bit/20ns	£400.00
Marconi 2828A	Digital Simulator	£200.00
Marconi 2829	Digital Analyzer	£200.00
Marconi 2831	Channel Access Switch	£200.00
Marconi OA2805	PCM Regenerator Test Set	£250.00
Marconi TF2019C	Noise Generator - Many Filters Available	£250.00
Marconi TF2092C	Noise Receiver	£250.00
Marconi TF2808/2	Pattern Generator and SLMS (Brand New/Boxed)	£120.00
Marconi TF2807A	P.C.M. Multiplex Tester	£200.00
Marconi TF2830	Multiplex Tester	£200.00
Meguro	MK612A VTR Jitter Meter	£75.00
Phoenix	5500A Telecommunications Analyzer	£1,500.00
Racal 202, 205	State Logic Analyzer	£150.00
Schlumberger	7700 140 m Bit/s Filtermeter/Generator	£125.00
Schlumberger	7710 Mainframe Set 34/140 M Bit/s	£125.00
Siemens	D215S Level Meter/W3155 Tracking Oscillator	£150.00
Siemens P2032	Bit Error Measuring Set	£900.00
Tek 834	Programmable Date Comms Tester	£150.00
Thurlby	LA4800 Logic Analyzer	£500.00
W&G	SPM15 Level Meter	£800.00
W&G	PS12 Level Generator	£300.00
W&G	SPM12 Level Meter	£POA
W&G	PCM2-3 PCM Test Set	£300.00
W&G	SBG-1 SSB Level Generator	£150.00
W&G	DLM3 Data Line Test Set	£500.00
W&G	SPM19 Level Meter	£2,500.00
W&G	MU3 Test Point Selector	£POA
W&G	PJM-1 PCM Jitter Meter	£250.00

SIGNAL ANALYZERS

AD 352	FFT Analyzer	£300.00
B&K 2033	Signal Analyzer	£2,000.00
HP182T+HP8557A	Spectrum Analyzer .01-350MHz	£800.00
HP182T+HP8558B	Spectrum Analyzer 100KHz-1.5GHz	£1,350.00
HP334A	Distortion Analyzer	£250.00
HP339A	Distortion Measuring Set	£1,200.00
HP3581C	Selective Volt Meter	£600.00
HP3582A	0.02Hz-25.999KHz Spectrum Analyzer	£1,500.00
HP8753C	6GHz Network Analyzer	£14,500.00
HP8901A	Modulation Analyzer	£2,000.00
HP8903B	Audio Analyzer	£3,200.00
Marconi 2305	Modulation Meter	£2,000.00
Marconi 2382+2380	400MHz Spectrum Analyzer	£3,500.00
Marconi 2601	True RMS Voltmeter	£500.00
Marconi 2955	Test Set+2960 TACS Unit	£2,400.00
Marconi TF2370	110MHz Spectrum Analyzer	£600.00
R&S	Polyskop SWOB 5	£1,500.00
R&S	SMDU Z1	£400.00
R&S	Ure RMS Voltmeter	£800.00
R&S CMS52	Comms. Service Monitor	£6,500.00
Racal 9302	RF Millivolt Meter	£350.00
Spectral DY. SD37	FFT Analyzer	£1,800.00
Tek 7L12	100KHz-1.8GHz	£800.00
Tek DA4084	Programmable Distortion Analyzer	£700.00

MISCELLANEOUS

PYE CHARGERS TYPE BC21C
NEW & BOXED: £25.00
MOTOROLA BATTERY CHARGER TYPE NTN4922A
GOOD CONDITION: £85.00
FARNELL MP30-80, 1KW, 30V, 80A
AUTO RANGING POWER SUPPLY: £500.00

MATCH EFFICIENCY METER MODEL MB800
FREQUENCY RANGE 775-1025MHz
SWR (VSWR) INDICATION RANGE 1.0:1 TO 5.0-1
£150.00

CLEARANCE (NOT TESTED)

Adret	5104 Drving Synthesizer 90-120MHz	£125.00
Boonton	82AD Modulation Meter	£200.00
Farnell	B30/20 Power Supply Stabilised	£120.00
Farnell	E350 Stabilised Voltage Supply	£120.00
Farnell	RB1030/35 Electronic Load 1kW 30A 35V	£300.00
Farnell	TSV70 Mk2 Stabilised Power Supply	£180.00
Ferrograph	RTS2 Recorder Test Set	£200.00
Fluke	8520A Digital Multi Meter	£250.00
Fluke	8860A Digital Multi Meter	£150.00
Giga	GR1101A 12-18 GHz Microwave Signal Generator	£150.00
Giga	GU1328A 2-8GHz Microwave Signal Generator	£150.00
Harris	RF/2305 Receiver/Exciter	£200.00
Hitachi	V550B 50MHz Oscilloscope	£200.00
HP	11713A Attenuator Switch Driver	£300.00
HP	1741A 100MHz Oscilloscope	£300.00
HP	1742A 100MHz Oscilloscope	£275.00
HP	181A Main Frame c/w 1840A+1825A	£125.00
HP	3400A RMS Volt Meter	£120.00
HP	3570A Network Analyser 50Hz-13MHz	£150.00
HP	4333A Distribution Analyser	£300.00
HP	435A Power Meter	£175.00
HP	435B Power Meter	£250.00
HP	489A Microwave Amplifier 1-2GHz	£125.00
HP	5315A Universal Counter	£200.00
HP	5328A Universal Counter	£120.00
HP	536A Time Interval Probes	£150.00
HP	8412B Phase Magnitude Display	£175.00
HP	8443B Tracking Generator/Counter	£250.00
HP	8445B Automatic Preselector	£300.00
HP	8552B IF Section	£250.00
HP	8553B RF Section 0-100MHz	£200.00
HP	8553L RF Spectrum Analyser 0-110MHz	£200.00
HP	8556A LF Spectrum Analyser	£200.00
HP	86601A RF Section 0.1-110MHz	£300.00
HP	8750A Storage Normalizer	£200.00
HP	491C Microwave Amplifier 2-4GHz	£125.00
HP	8413A Phase Gain Indicator Unit	£175.00
Iwatsu	SC/7103 Frequency Counter	£160.00
Keithley	192 Programmable Digital Multimeter	£200.00
Marconi	6056B Signal Source 2-4GHz	£150.00
Marconi	TF2337A Auto Distortion Meter	£150.00
Philips	PM5519 Colour TV Pattern Generator	£200.00
Polarad	1105E/FT 0.8-2.4GHz Signal Generator	£250.00
Racal	9008 Modulation Meter (Old Type)	£175.00
Racal	9009 Modulation Meter (Old Type)	£150.00
Racal	9104 RF Power Meter	£200.00
Racal	9300 RMS Volt Meter	£175.00
Racal	9301A RF Millivoltmeter True RMS	£180.00
Racal	9921 UHF Frequency Counter	£275.00
Racal	MA1720 Drive Unit	£300.00
Schlumberger	1170 Frequency Response Analyser	£150.00
Schlumberger	7055 Micro Volt Meter	£150.00
Systron Donner	5000A Sweeper c/w Oscillator 5014/26 3.2-6.5GHz	£250.00
Tektronix	464 Oscilloscope	£300.00
Tektronix	P6042 Current Probe DC-50MHz	£200.00
Tinsley	5761 Resistance Bridge	£200.00
W&J	3737A/10 HF Receiver	£120.00
W&J	DMS107 Demodulator	£120.00
W&J	565 Receiver	£200.00
W&J	DM/112 Demodulator	£250.00
W&J	MTF/106A Microwave Tuning	£150.00
W&J	WJ9518AE/9 FDM Demodulator	£250.00
Adret	2230A Frequency Synthesizer 1MHz	£150.00
Adret	6303B Signal Generator	£75.00
Advance	TC17 Timer/Counter	£15.00
Aiken	SH/2400P 20-100MHz	£75.00
AMF	7736 Digital Counter	£15.00
Aplab	LVE30/2 Regulated Power Supply 0-30V 0-2A	£25.00
Brookdeal	411 Phase Sensitive Detector	£25.00
Cossor	333A Test Set	£75.00
Crohn/Hite	5300A Function Generator	£40.00
Dana	4200 Digital Multimeter	£20.00
Datron	1030 RMS Volt Meter	£25.00
Datron	1030A RMS Volt Meter	£25.00
Datron	1055 DC Volt Meter	£25.00
Farnell	2085 AF Power Meter	£40.00
Farnell	DM131 Digital Multimeter	£30.00
Farnell	FG1 Function Generator	£30.00
Farnell	LF1 Sine/Square Oscillator	£60.00
Farnell	SGiB Signal Generator Interface	£30.00
Feedback	EW604 Electronic Watt Meter	£50.00
Fluke	1953A Counter/Timer	£60.00
Fluke	7261A Universal Counter/Timer	£75.00
Fluke	8000A Digital Multimeter	£50.00
Fluke	8010A Digital Multimeter	£25.00
Fluke	8600A Digital Multimeter	£60.00
Gen. Radio	1232/A Tuned Amplifier & Null Detector	£25.00
Gen. radio	1362 UHF Oscillator 220-920MHz	£25.00
Gould	J3A+B Signal Generator	£50.00
Gould	TC314 Timer/Counter	£20.00
HP	10256A Serial-Parallel Convertor	£25.00
HP	11559B Amplifier Switch + HP8709B Synchroniser	£75.00
HP	1600A Logic State Analyser	£40.00
HP	203A Variable Phase Generator	£25.00
HP	3465B Digital Multimeter	£40.00
HP	3710A IF/BB Transmitter	£75.00
HP	3720B IF/BB Receiver	£75.00
HP	431C Power Meter	£50.00
HP	434A Calorimetric Power Meter	£75.00
HP	461A Amplifier	£50.00
HP	5004A Signal Analyser	£30.00
HP	5150A Thermal Printer	£60.00
HP	52454 Plug In Unit & HP5245L Counter	£50.00
HP	5245L + 5255A Counter/Converter	£50.00
HP	5246L Electronic Counter	£30.00
HP	5302A 50MHz Universal Counter	£40.00
HP	5304A Timer/Counter	£40.00
HP	59301A ASCII-Parallel Converter	£30.00
HP	59313A A/D Converter	£30.00
HP	59501A HP/IB Isolated D/A/Power Supply	£40.00
HP	6111A DC Power Supply 0-20V 0-1A	£75.00
HP	6130C Digitally Controlled Voltage Source	£60.00
HP	8403A Modulator	£60.00
HP	8406A Frequency Combined Generator	£75.00
HP	8418A/H01 Auxiliary Display Holder	£90.00
HP	8717B Transistor Bias Supply	£50.00
Iwatsu	SS/5416A DC-40MHz Synchroscope	£50.00
Keithley	177 Millivolt Digital Multimeter	£75.00
Kemo	DP1 1.0Hz--100KHz Phase Meter	£70.00
Kepco	E30/2B 30V 2A Power Supply	£25.00
KSM	T25 Pulse Generator	£30.00
Levell	T666A Transistor Decade Oscillator	£50.00
Levell	TM3B AC Microvolt Meter	£50.00
Lyons	PS22 Pulse Generator	£25.00
Lyons	PG2B Pulse Generator	£30.00
Lyons	PG71N Pulse Generator	£30.00
Lyons	PG73N Pulse Generator	£25.00
Lyons	PG750A Pulse Generator	£30.00
Malden	1000F Mk II 1GHz-32MHz P.O. Frequency Counter	£10.00
Marconi	2304A 80MHz Digital Frequency Meter	£30.00
Marconi	2437 100MHz Universal Timer Counter	£45.00
Marconi	2833 +A Digital Line Monitor	£25.00
Marconi	6050/3 Frequency Meter	£50.00
Marconi	6460 + /1 tft Power Meter	£50.00
Marconi	6550B + /1 Programmable tft Power Meter	£20.00
Marconi	6587 Levelling Amp	£25.00
Marconi	TF2102M AF Oscillator 3Hz-20KHz	£30.00
Marconi	TF2104 10Hz-11-KHz Low Distortion Oscillator	£30.00
Marconi	TF2162 MF Attenuator DC-1MHz	£30.00
Marconi	TF2163S UHF Attenuator DC-1GHz	£60.00
Marconi	TF2169 Pulse Modulator	£20.00
Marconi	TF2173 Digital Synchronizer	£60.00
Marconi	TF2331A Distortion Factor Meter	£50.00
Marconi	TF2424 Frequency Counter	£60.00
Marconi	TF2430 80MHz Digital Frequency Meter	£50.00
Marconi	TF2431 200MHz Digital Frequency Meter	£65.00
Marconi	TF2432 560MHz Digital Frequency Meter	£70.00
Marconi	TF2600B Video Voltmeter	£90.00
Marconi	TF2604 Electronic Voltmeter	£25.00
Marconi	TF2700 Universal Bridge	£75.00
Marconi	TF2701 Universal Bridge	£30.00
Moritex	MS/500 Oscilloscope	£20.00
Narda	Broadband Isotropic Radiation Meter	£50.00
Norma	D1401 Thermometer	£15.00
Philips	6302 RCL Bridge	£75.00
Philips	7832 SWR Meter	£50.00
Philips	7841 Power Meter	£50.00
Philips	PE1510 Power Supply 0-35V 1A	£20.00
Philips	PE1511 Power Supply 0-30V 1A	£25.00
Philips	PM2504 Electronic VA Meter	£75.00
Philips	PM2423 Digital Multimeter	£15.00
Philips	PM28B Power Supply	£50.00
Philips	PM5108 Function Generator 1Hz-1MHz	£95.00
Philips	PM5142 0-01Hz LF Synthesizer	£60.00
Philips	PM5508 PAL Colour TV Pattern Generator	£30.00
Philips	PM5520 Monochrome Test Generator	£25.00
Philips	PM6509 Leakage Current Breakdown Voltage Meter	£75.00
Philips	PM6613 250MHz Universal Counter	£50.00
PSI	3151 Function Generator	£50.00
PSI	A100 Waveform Generator	£50.00
PSI	A102 Waveform Generator	£50.00
R&S	Scud Radio Code Test Set	£50.00
Racal	1200 Series Universal Switch Controller	£25.00
Racal	4009 Digital Multi Meter	£25.00
Racal	5001 Digital Multi Meter	£50.00
Racal	9058 HF Selective Analyser	£40.00
Racal	9059 Frequency Period Meter	£50.00
Racal	9839 UHF Frequency Meter	£40.00
Racal	9902A 50MHz Universal Counter	£60.00
Racal	9904 Universal Counter Timer	£75.00
Racal	9904M Universal Counter Timer	£75.00
Racal	9906 Universal Counter Timer	£50.00
Racal	9910 Frequency Counter	£50.00
Racal	9911 Frequency Counter	£50.00
Racal	9912 Frequency Counter	£50.00
Racal	9913 Frequency Counter	£50.00
Racal	9914 UHF Frequency Counter	£60.00
Racal	9914A 200MHz Frequency Counter	£50.00
Racal	9915 UHF Frequency Meter	£90.00
Racal	9916 UHF Frequency Meter	£70.00
Racal	9918 UHF Frequency Meter	£75.00
Racal	9960A 200MHz Universal Counter	£65.00
Racal	GPAB Interface 110	£40.00
Racal	9905 Universal Counter Timer	£50.00
Racal	9932 Instrument Interface	£20.00
Schlum	A220 Digital Volt Meter	£25.00
SE Labs	SM205B Automatic Counter Timer	£20.00
Siemen	7KB4304 Watt Meter	£75.00
Singer	AC Ratio Standard	£30.00
Tek	1120 Transistor Tester	£75.00
Tek	191 Constant Amplitude Signal Generator	£50.00
Tek	453 Oscilloscope	£60.00
Tek	Time Mark Generator	£50.00
Tek	106 Squarewave Generator	£30.00
Tek/Sony	308 Data Analyser	£95.00
Telequipment	D83 Oscilloscope System	£40.00
Telequipment	D1011 Oscilloscope	£40.00
Telequipment	D34 10MHz Oscilloscope	£40.00
Telequipment	DM64 Oscilloscope	£40.00
Thander	TA2080 20MHz Logic Analyser	£75.00
Thurlby	OM358 Scope Multiplexer	£45.00
Trio	CS/1566A 20MHz Oscilloscope	£60.00
W&G	SMP/31 Level Meter 200Hz-620KHz	£80.00
W&J	SM/1622 Signal Monitor	£30.00
W&J	TDM/102/1 Telephone Demodulator	£15.00
W&J	TFC103 Telephone Frequency	£30.00
W&J	UH101 Tuning Head	£75.00
W&J	UH15 Tuning Head	£40.00
W&J	VH103 VHF Tuning Head	£75.00
W&J	521A Receiver	£75.00
W&J	SM/6108 Signal Monitor	£30.00
W&J	TDM/110 Basic Group Demodulator	£10.00
Wavetek	147 HF Sweep Generator 0.0005Hz-10MHz	£50.00
Wayne Kerr	B522 Component Bridge	£40.00
Wier	460 Power Supply 0.3A 0.60V	£50.00
Wiltron	501 Logic Level Meter	£60.00

RACAL TACTICOM
VHF TRANSMITTER/RECEIVER
WITH ANTI-JAMMING AND
INTEGRAL SPEECH FACILITIES
(JAGUAR VEHICLE RADIO VRQ316HE-HG)
COMPLETE SYSTEM
PRICE: £2,500.00

TELFORD ELECTRONICS

Old Officers Mess, Hoo Farm, Humbers Lane,
Horton, Telford, Shropshire TF6 6DJ, UK
Phone: (00 44) 01952 605451 Fax: (00 44) 01952 677978
e-mail: telfordelectronics@telford2.demon.co.uk
Carriage: £10+VAT @17.5% to be added to all UK orders
Overseas orders welcome - Please call

+++ Merry Christmas to all our Customers, +++
++++ Old and New ++++

CIRCLE NO. 128 ON REPLY CARD

Free circuit design demo disk with every order*

BACK ISSUES

Back issues of Electronics World are available, priced at £2.50 in the UK and £3.00 elsewhere, including postage. Please complete the coupon and send with correct payment to:
Electronics World, Quadrant House, The Quadrant, Sutton Surrey, SM2 5AS.
Note that not all issues are available and please allow 21 days for delivery.

*While stocks last.

ue (Month/Year)	Quantity	Price	Total
		Total Order	

Name
Address

Post code

Method of payment (please circle): Access/Mastercard Visa Cheque PO

Cheques payable to Reed Business Publishing

Credit Card Number

Signed Expiry Date

LETTERS

Letters to "Electronics World" Quadrant House, The Quadrant, Sutton, Surrey, SM2 5AS

Technology at any price?

The item entitled 'New UK chip lab on the horizon' in the November '97 issue omitted to say that the public enquiry on the planning application for this factory came out against.

Also, although your article mentioned that the site is green belt, it should have added that it is a very pleasant area of rolling English countryside bordering on Sutton Coldfield. This is not an industrial area of Birmingham, as readers might suppose from the article, but one of the few agreeable residential areas in that city. The site is huge – 56 hectares – and the factory design a typical modern wasteful sprawl that would raise the hackles of even a Philistine.

However, the local area is Tory heartland – MP Sir Norman Fowler. Could this be why john Prescott has over-ruled the public enquiry and decided it would be the perfect place for this particularly ugly, sprawling factory?

From this it appears that the results of public enquiries are worthless and that anyone with a large enough pot of money can over-ride any consideration for the environment, be it green belt, an SSI, or merely a green and pleasant land.

Rod Cooper
Sutton Coldfield

Room for resonance

As one of those unfortunate people who loves music, but cannot play a note, I have to rely on a domestic audio system to reproduce music at home.

In an attempt to move a little further along the road of faithful reproduction I have developed my system to include separate power amplifiers, to eliminate cables, and recently added a Russel Bredan Sub-woofer from the February 1997 issue.

But I am now bedevilled with room resonances. My lounge is 4.7 by 4.3 by 2.35m, which, if you do the calculations, produces some rather interesting resonances at the low end of the audio spectrum. The problem is aggravated by a non-technical wife who insists that the sub-woofer must remain out of sight, viz in a corner of the room behind the television.

I appreciate that moving to a mansion would solve the problem, but as I am employed by a well known seat of learning just south of here, the level of my salary rather precludes this option.

In desperation I have tried notch filters, but this merely results in a very 'woolly' bass. At present I have resorted to using the bottom two sections of a graphic equalised circuit to try to tame the rather unpleasant booming, but this, as you will appreciate, is less than ideal.

It may be anathema to audio purists, but is it possible that digital signal processing could be of assistance in this area? As dsp is outside my field, perhaps other readers could make some suggestions.

I am sure that if designers like John Linsley Hood, Douglas Self and Ben Duncan would apply their considerable expertise in the audio field to this problem, they would earn the undying gratitude of many audiophiles such as myself.

Alan Frobisher
Ely
Cambridgeshire

Tuning iron

Recently I visited the museum at Sidmouth. One of the display cases there is devoted to items produced by S G Brown Ltd. Brown retired to reside in Sidmouth around 1941, hence the local interest.

Among the exhibits is a small wireless receiver with the label, 'The Brown 3 Valve Receiving Set With Multi Wave Iron Tuning'. This seems to be a unique example of an early method of variable inductance tuning.

I have no other details of this receiver, and as I am extremely interested in the early pioneer days of wireless reception I wonder if any of you have more information.

I wrote to the present S G Brown Ltd, to be told that the wireless part of their business had been sold to Racal Acoustics Ltd in the late sixties. Racal was unable to find any reference to the Multi-Wave iron Tuning receiver in the company's archives, but did have details of other Brown receivers.

Thomas Smith
Exeter
Devon

100kHz phase meter? Who needs it?

Regarding Cyril Bateman's fast phase meter in the November 1997 issue, at 100kHz, which is totally inaudible, a tenth of a degree is a time difference of 10µs divided by 3600, or about 2.8ns. This is enough time for sound to travel a bit less than one micrometre in air. It takes a lot of effort to keep your head still to an accuracy of one millimetre, never mind a micrometre, so I fail completely to see what the point of it is.

Alan Robinson
York

Cyril replies

May I thank Alan for his letter regarding my phase meter design. While eminently suitable for audio frequency measurements, my meter's prime requirement was to measure capacitor and inductor phase angles at frequencies, temperatures and voltages as used for switched mode power supplies. These methods were clearly covered in the panel 'Applying the phase meter' on page 910.

While I gather Alan's interests are mainly with audio, I must point out that most of my interests reside with much higher frequencies, which is precisely why I evaluated this meter's ability at 1MHz. Perhaps this becomes more apparent should Alan re-read my August impedance article and the capacitor article due December. As a practising rf measurements engineer and capacitor specialist, I'm afraid my needs for audio only measurements are minimal.

Good measurement practice requires that instruments be used well within their capacity, indeed many National and International 'approved' measurements are required to be 'true values' i.e. inset by the measurements uncertainty, leading to adoption of equipment having accuracy ten times better than the claimed measurement.

Since the Audio Precision System One, beloved of audio engineers, measures amplitude to 204kHz, also ±2° accuracy phase measurements to 50kHz. I presume Alan is also sending a similar complaint to Audio Precision.

Is this a hazard?

I have recently had a mobile phone transmitter installed on the roof directly above my flat. It is approximately 17 by 30 feet. This is a venture that the local council has entered into with a telecommunication company.

This huge piece of apparatus raises concern regarding the possibility that it may emit harmful radio waves. I know nothing about the possible hazards or otherwise of these transmitters.

I am writing in the hope that readers can enlighten me as to the potential health hazards that may be caused by such a transmitter – not 2 feet above my head.

P D Njuguna
London W6

Weaned on Wien

In a letter in the December 1997 issue, Mr Linfoot asks why anyone nowadays would want to build a Wien-bridge oscillator.

In addition to those engaged in designing and testing very low distortion analogue circuits, there are numerous budding engineers in colleges and universities who encounter the Wien-bridge oscillator not only in their lectures but also in laboratory work, in which the Wien-bridge oscillator is popular because it uses few components and, superficially, is easy to design.

However, standard textbooks make no mention of amplifier phase shift and one of the aims of my article, published in *Electronics World*, October 1997, was to develop a criterion for the selection of an op-amp at the start of the design.

Mr Linfoot claims that a cookbook three-op-amp oscillator is more predictable than the single op-amp one I considered.

Well, my mind boggles at the prospect of predicting, by any direct analytical approach, the quantitative effect on the frequency of oscillation of the cumulative phase shifts of the three op-amps.

B L Hart
Leigh-on-Sea

HOW DOES YOUR EQUIPMENT MEASURE UP? ???

PHILIPS PM3217 (This is a proper scope)
Dual Trace 50MHZ Delay Sweep Incl 2 Probes
£400

MARCONI 2019A Syn AM/FM Signal Gen 80KHz-1040MHz £1400
MARCONI 2019 Syn AM/FM Signal Gen 80KHz-1040MHz £1500
MARCONI 2018 Syn AM/FM Signal Gen 80KHz-520MHz £800
MARCONI 2017 AM/FM Signal Gen 10KHz-1024MHz £1750

HC3502
Dual Trace 20MHZ 5mV-20V/Div; 0.2 µ Secs – 0.5 Sec/Div. X-Y; X5 magnifier; TV Sync etc
Hardly Used £150 **Un-used £200**

FARNELL SSG520 Syn AM/FM Signal Gen 10KHz-520MHz £325
FARNELL PSG520 Syn AM/FM Signal Gen 10KHz-520MHz Portable £450
MARCONI 6311 Programmable Sweep 10MHz-20GHz £4500
MARCONI 2022S AM/FM Signal Gen 10KHz-1GHz £2000
H.P. 8656A Syn Signal Gen 0.1-990MHz £1500
H.P. 8640B PhaseLock/Syn Sig Gen 500KHz-512MHz £750
H.P. 8640A AM/FM Signal Gen 500KHz-1024MHz £650
PHILIPS PM5193 Programmable Syn Func Gen 0.1MHz-50MHz £1500
PHILIPS PM5192 Programmable Syn Func Gen 0.1MHz-20MHz £1000
H.P. 3325A Syn Function Gen 21MHz £1250
PHILIPS PM5134 Sweep Func Gen 0.001Hz-20MHz Sine/Sq/Tri etc £400
PHILIPS PM5132 Sweep Func Gen 0.1Hz-2MHz Sine/Sq/Tri etc £250

THE CLASSIC TEKTRONIX 400 SERIES

468 Digital Storage Dual Trace 100MHz Delay £650
466 Analogue Storage Dual Trace 100MHz Delay £395
475 Dual Trace 200MHz Delay Sweep £500
465 Dual Trace 100MHz Delay Sweep £400

FLUKE PM3082 2+2Ch 100MHz Delay TB Cursors £1200
PHILIPS PM3296A Dual Trace 400MHz Dual TB Delay Cursors IEEE **£1750**
TEKTRONIX 2456A 4 Trace 350MHz Delay Sursors etc £2500
TEKTRONIX TAS485 Dual Trace 100MHz Delay Sursors £800
TEKTRONIX 2215 Dual Trace 60MHz Delay Sweep £400
PHILIPS 3055 2+1 Ch 50MHz Dual TB/Delay £475
PHILIPS PM97 Dual Trace 50MHz SCOPEMETER Dig Storage £600
GOULD OS1100 DualTrace 30MHz £200 With Delay £240
GOULD OS300 Dual Trace 20MHz £200

AND REMEMBER ALL OUR EQUIPMENT IS TESTED PROPERLY!

CLASSIC AVO8 Mk5 in Case with Batteries & Leads **£50**

FLUKE 77DMM 3½digit with Carrying Case & Leads **£60**

RACAL COUNTERS
9918 10Hz-560MHz £125
9916 10Hz-520MHz £150
9904 DC-50MHz £60

RACAL 1998 Counter 1.3GHz..... **£650**
RACAL 1991 Counter/Timer 160MHz **£450**
RACAL 1990 Counter 120MHz..... **£300**

SOLARTRON 7151 DMM 6½ digit IEEE **£450**
SOLARTRON 7150 DMM 6½ digit IEEE **£300**
True RMS

SPECTRUM ANALYSERS

H.P. 8565A 0.01-22GHZ £3500
H.P. 8590A 10KHZ-1.8GHZ 75 ohm £2750
AILTECH 727 0.001-20GHZ £1500
H.P. 182 with 8559A 0.01-21GHz £3000
H.P. 182 with 8558B 100KHz-1500Mhz from £1500
H.P. 3582A Dual Channel 25KHz £2000
H.P. 141T with 8555A & 8552B 10MHz-18GHz £1500

Other 141T Systems available

MARCONI TF2370-110MHz ..... £700-£1000
MARCONI TF2370 with TF2373 30Hz-1.2GHz £1600
H.P. 8620C Sweep osc with 86290B 2-18GHz £1750
H.P. 8620C Sweep osc with 86222B 0.01-2.4GHz £1750
MARCONI TF2015 AM/FM Sig Generator 10-520MHz £150
FARNELL DSG-2 Syn Osc 0.0001Hz-109.99Hz Sine/Sq/Sweep/IEEE£200
GOULD J3B Sine/Sq Oscillator 10Hz-100KHz £150
FARNELL LFI Sine/Square Oscilator 10MHz-1MHz £75
H.P. 8160A Programmable Precision Pulse Gen 50MHz £950
MARCONI 2610 True RMS Voltmeter GPIB £500
H.P. 3455A 6½ digit Multimeter £700
DATRON 1061A 1061A 6½ digit True RMS with IEEE £800
SOLARTRON 7081 7½ digit Multimeter £1600
EIP 371 Source Locking Microwave Counter 20Hz-18GHz £1500
H.P. 5342A Frequency Counter 10Hz-24GHz £1750
MARCONI 2440 Frequency Counter 10Hz-20GHz IEEE £1750
MARCONI 2437 Universal Counter/Timer DC-100MHz Un-used £125
MARCONI 2430A Frequency Counter 10Hz-80MHz Un-used £95
H.P.4275A Multi Frequency LCR Meter £3000
H.P. 4261A LCR Meter £1250
RACAL 9343/M LCR Databridge IEEE £250
MARCONI 2305 Modulation Meter 500KHZ-2GHZ £2250
RACAL 9009 Automatic Mod Meter 30MHz-1.5GHz £250
SAYROSA 252 Automatic Modulation Meter £150
FARNELL AP10G/30 PSU 0-10V; 0-30A Autoranging £1000
FARNELL H60/25 0-60V, 0-25A PSU £400
FARNELL TSV70Mk2 70V 5A/35V 10A PSUs £200
THURLBY TSX1820 Precision PSU 18V 20A £275
THURLBY TSP3222 Prog PSU 32V 2A Twice GPIB Digital £450
THURLBY PL320 30V 2A Digistal PSU with GPIB £150
RACAL 9104 RF Power Meter 1MHz-1GHz 10mW-300W £325
MARCONI 2167 RF Amplifier 50KHz-80MHz 10W 47dB Gain £50
HUNTRON TRACKER Model 1000 in Carrying Case £125
STABILOCK 4021 Radio Test Set £700

BIRD 43 ELEMENTS
Types 5A; 10A; 100A; 5B; 10B; 100B; 5C; 25C; 250C; 5D; 250; 500; 1000; **£25** each. 100H; 250H; 1000H; **£35** each. 1000P **£65**

NEW AND HARDLY USED

PANASONIC VP8177A FM/AM SIGNAL GENERATOR 100KHz-100MHz; FM 0-100KHz; Output -19dB-99dB AM 0-60%; 32 Preset Memory; Digital Display Frequency & Output.
Used £450 **Un-used £750**

PANASONIC VP7637A STERO SIGNAL GENERATOR Generates Broadcast FM-RDS/ARI. Preset memory; GPIB
Used £400 **Un-used £700**

KENWOOD FL180A WOW/FLUTTER METER 0.003%-10%; Freq 3KHz/3.15KHz RMS/AVERAGE/PEAK: Weighted Filters; Digital Display of rpm; 4 digit Freq Counter (0.01KHz-9.999KHz/0.01KHz-55KHz)
Used £400 **Un-used £500**

POWER SUPPLY Model HSP3010 0-30Volts; 0-10 Amps Current Limiting. 2 Meters.
Used £160 **Un-used £200**

GOODWILL GVT427 DUAL CHANNEL AC MILLIVOLTMETER 10µV 300V in12 Ranges Frequency 10Hz-1MHz
Used £100 **Un-used £125**

GOODWILL GAG-808G AUDIO GENERATOR Sine/Square 10Hz-1MHz in 5 Ranges 0.1% Low Distortion 5 Steps Output Attenuator **Un-used £80**

GOODWILL GFC 8010G FREQUENCY COUNTER Range 1Hz-120MHz 8 Digit Display 15mV RMS Sensitivity
Un-used £75

ANALOGUE MULTIMETER Model HC260TR AC/DC Volts; DC Current 10Amps; 17 Ranges; Continuity Buzzer; Transistor Tester
Un-Used £15

STEREO AUDIO BALANCE TO UNBALANCED CONVERTOR
ie For Car Radio Servicing **Un-used £20**

Used Equipment – GUARANTEED. Manuals supplied.
This is a VERY SMALL SAMPLE OF STOCK. SAE or Telephone for lists. Please check availability before ordering.
CARRIAGE all units £16. VAT to be added to Total of Goods and Carriage.

STEWART of READING

110 WYKEHAM ROAD, READING, BERKS. RG6 1PL
Telephone: (0118) 9268041. Fax: (0118) 9351696
Callers Welcome 9am-5.30pm Monday to Friday (other times by arrangement)

ACCESS VISA

CIRCLE NO. 129 ON REPLY CARD

AT STEWART OF READING THERE'S ALWAYS SCOPE FOR IMPROVEMENT!

LOOK!

BRAND NEW OSCILLOSCOPES!

NEVER USED!! ***LIMITED STOCK!!!***

DMS 3850A Digital Storage/DMM
Handheld LCD display 2 Channel 50MS/S. Auto Range. 4 digit DMM/Capacitance/Frequency Counter. Battery Opration or external 7.5-9VDC ie. AC Adaptor (Not supplied). RS232 Comes in Black Carrying Pouch complete with 2 scope probes; DMM leads; manual.
New Boxed For Only £400

DTS 40 Digital Storage
Dual Trace 40MHZ. 20MS/S Storage. Cursors + On Screen Readout. Sweep Delay; Interface etc. etc. Supplied Unused in original box complete with 2 Probes & Manual.
Amazing Value at £400

DTA 20/40/60 Dual Trace
with Alt Magnification; TV Trig etc. etc. Lots of Specification.
DTA20 Dual Trace 20MHZ: £225
DTA40 Dual Trace 40MHZ - 12KV EHT: £300
DTA60 Dual Trace 60MHZ – 12KVB EHT: £375
All unused & boxed supplied with 2 probes & Manual

DTV 100 3 Channel 100MHZ Sweep Delay etc: £425
DTV 60 3 Channel 60MHZ Sweep Delay etc: £375
DTV 20 Dual Trace 20 MHZ: £200
All unused, boxed with 2 probes & manual

CIRCLE NO. 129 ON REPLY CARD

TRANSFORMERS FOR BALANCED LINES IN HIGH PERFORMANCE AUDIO SYSTEMS

SOWTER TRANSFORMERS EST. 1941

E A SOWTER LTD

PO Box 36 IPSWICH IP1 2EL ENGLAND
Tel: +44(0)1473 252794
Fax: +44(0)1473 236188
E.Mail: sales@sowter.co.uk
Web: http://www.sowter.co.uk

Design and Manufacture
of all types of Audio Transformer using
Nickel and Grain Oriented cores

Free catalogue
Free technical support service
Popular types from stock

CIRCLE NO. 130 ON REPLY CARD

Sampling problem

Some readers have obviously enjoyed getting their teeth into the problem of sampling of waveforms with frequencies just below the Nyquist frequency. Can I pose a related problem in the time domain?

In analysing audio signals, many consecutive samples of waveforms are taken, chopped into blocks with length some power of two, windowed and the FFT applied. The sample rate and the power of two set the time resolution of the system, for example one sample every 24µs, and 256 points in the FFT gives a time resolution of 6.1ms. As frequency resolution is approximately *1/time* resolution, the frequency resolution is 162Hz in this case.

If the waveform being sampled is a continuous pure tone of say 2kHz, the resulting spectrogram will be a nice band across the screen. What can I expect if the pure tone is amplitude modulated at a frequency just higher than the frequency resolution, i.e. with a period just less than time resolution? What can I expect at a modulation frequency of say 500Hz, i.e period about one third of the time resolution?

Les May
Rochdale
Lancs

What can I do?

Please can some body who knows the law regarding mains interference caused by the use of an arc welder help me out?

Recently my house lights started to flicker. I found the cause of this to be a person using an arc welding set in my road. It has caused other problems while I have been working in my work shop. Try making meaningful measurements when the mains is bouncing up and down like a yo-yo. Clocks don't like it either, tending to become erratic. And I get interference when trying to listen to am radio.

I contacted the electricity board for this area, and their chief investigator came to place a recorder on to my supply. While he was with me, the welder decided to have a break and no evidence was gathered. Nevertheless, the phase that I am on was changed because there are two phases per house available in this road.

Now another person has started up on this phase. I have recorded disturbances of 20-50V drop in mean level. That is from 245-240V normal supply down to 190V. This can last for several minutes at a time.

My questions are as follows. Is this type of equipment now illegal due to the emc regulations? Regardless of the equipment that is causing it, is such an effect on the mains legal? And if either of the above is true, what can I do about it?

Ian Johnson
St Albans
Herts

Noise appreciation

I was pleased to Patrick May's article in the November issue. Mr May has worked in *1/f* noise in semiconductors for many years, and has been aware of the deficiencies in our knowledge of how the noise processes result in an approximate *1/f* spectrum. His efforts to understand this process are very interesting, and deserve wider recognition.

James B. Calvert, PhD, P.E.
Denver Colorado

Debug your assembler first

In these days of hi-tech wizardry and internetworks, you might be amused by something I came across while doing some simple programming.

It may well be that more modern assemblers do not suffer from similar complaints, but I have tried Masm 3/4/5 on this, as well as A86 – written by an ex-Intel guru – and Debug.

Small Assembler, from Hendrix, creates the code you might expect, other examples highlight unexpected results. The problem is illustrated with the CMP instruction. It also occurs with SUB and ADD. This is not a cpu fault, but a fault in the assembler software.

My message is this; check your code carefully. Your tools may not have been put together by people with the same standards as yourself. There are companies that do not value the kind of diligence needed to detect such errors. Many a perfectionist has ended up on the dole.

Errors in programs caused by imperfections in software tools may not matter on the Internet. But in control systems, they can kill.

Malcolm J Bloor
Stafford

```
File: SMALT.ASM       Page: 1 Small Assembler~ Version 1.2~
Revision Level 13
line location         ...object...        source
1
2                     ;.386
3
4   CODE segment
5
6   0000              tst   proc far
7   0000  3D FF7F     cmp   ax, 0ff7fh    ;word form expected
8   0003  3D FF80     cmp   ax, 0ff80h    ;word form expected
9
10  0006  81 FB FF7F  cmp   bx, 0ff7fh    ;word form expected
11  000A  81 FB FF80  cmp   bx, 0ff80h    ;word form expected
12  ====================================
13  000E  3D 0001     cmp   ax, 01h       ;byte form expected
14  0011  3D 0011     cmp   ax, 011h      ;byte form expected
15  0014  3D 0111     cmp   ax, 0111h     ;word form expected
16  0017  3D 1111     cmp   ax, 01111h    ;word form expected
17
18  001A  83 FB 01    cmp   bx, 01h       ;byte form expected
19  001D  83 FB 11    cmp   bx, 011h      ;byte form expected
20  0020  81 FB 0111  cmp   bx, 0111h     ;word form expected
21  0024  81 FB 1111  cmp   bx, 01111h    ;word form expected
22
23  0028  3D 000F     cmp   ax, 0fh       ;byte form expected
24  002B  3D 00FF     cmp   ax, 0ffh      ;byte form expected
25  002E  3D 0FFF     cmp   ax, 0fffh     ;word form expected
26  0031  3D FFFF     cmp   ax, 0ffffh    ;word form expected
27
28  0034  83 FB 0F    cmp   bx, 0fh       ;byte form expected
29  0037  83 FB FF    cmp   bx, 0ffh      ;byte form expected
30  003A  81 FB 0FFF  cmp   bx, 0fffh     ;word form expected
31  003E  81 FB FFFF  cmp   bx, 0ffffh    ;word form expected
32
33  0042              tst   endp
34
35  0042              CODE  ends
36  end
```

```
Microsoft (R) Macro Assembler Version 5.10 10/28/97 16:46:2
Page   1-1
page 80,132
;.386
0000                CODE segment
0000                tst  proc far
0000  3D FF7F           cmp   ax, 0ff7fh    ;word form expected
0003  3D FF80           cmp   ax, 0ff80h    ;word form expected
0006  81 FB FF7F        cmp   bx, 0ff7fh    ;word form expected
000A  83 FB 80          cmp   bx, 0ff80h    ;word form expected
000D  3D 0001           cmp   ax, 01h       ;byte form expected
0010  3D 0011           cmp   ax, 011h      ;byte form expected
0013  3D 0111           cmp   ax, 0111h     ;word form expected
0016  3D 1111           cmp   ax, 01111h    ;word form expected
0019  83 FB 01          cmp   bx, 01h       ;byte form expected
001C  83 FB 11          cmp   bx, 011h      ;byte form expected
001F  81 FB 0111        cmp   bx, 0111h     ;word form expected
0023  81 FB 1111        cmp   bx, 01111h    ;word form expected
0027  3D 000F           cmp   ax, 0fh       ;byte form expected
002A  3D 00FF           cmp   ax, 0ffh      ;byte form expected
002D  3D 0FFF           cmp   ax, 0fffh     ;word form expected
0030  3D FFFF           cmp   ax, 0ffffh    ;word form expected
0033  83 FB 0F          cmp   bx, 0fh       ;byte form expected
0036  81 FB 00FF        cmp   bx, 0ffh      ;byte form expected
003A  81 FB 0FFF        cmp   bx, 0fffh     ;word form expected
003E  83 FB FF          cmp   bx, 0ffffh    ;word form expected
0041                tst  endp
0041                CODE ends
end
```

```
A86 V4.01 assembly of smalt.OBJ                1997-10-28 16:46
Source: smalt.asm  Page 1
Begin Source: smalt.asm
1                   ;.386
2
3                   CODE segment
4
5                   tst  proc far
6   0000  3D 7F FF      cmp   ax, 0ff7fh    ;word form expected
7   0003  3D 80 FF      cmp   ax, 0ff80h    ;word form expected
8
9   0006  81 FB 7F FF   cmp   bx, 0ff7fh    ;word form expected
10  000A  83 FB 80      cmp   bx, 0ff80h    ;word form expected
12  000D  3D 01 00      cmp   ax, 01h       ;byte form expected
13  0010  3D 11 00      cmp   ax, 011h      ;byte form expected
14  0013  3D 11 01      cmp   ax, 0111h     ;word form expected
15  0016  3D 11 11      cmp   ax, 01111h    ~ word form expected
16
17  0019  83 FB 01      cmp   bx, 01h       ;byte form expected
18  001C  83 FB 11      cmp   bx~ 011h      ;byte form expected
19  001F  81 FB 11 01   cmp   bx, 0111h     ;word form expected
20  0023  81 FB 11 11   cmp   bx, 01111h    ;word form expected
21
22  0027  3D 0F 00      cmp   ax, 0fh       ;byte form expected
23  002A  3D FF 00      cmp   ax, 0ffh      ;byte form expected
24  002D  3D FF 0F      cmp   ax, 0fffh     ;word form expected
25  0030  3D FF FF      cmp   ax, 0ffffh    ;word form expected
26
27  0033  83 FB 0F      cmp   bx, 0fh       ;byte form expected
28  0036  81 FB FF 00   cmp   bx, 0ffh      ;byte form expected
29  003A  81 FB FF 0F   cmp   bx, 0fffh     ;word form expected
30  003E  83 FB FF      cmp   bx, 0ffffh    ;word form expected
31
32                  tst  endp
33
34  FFF4  1A 00 00 00 00 00 CODE        ends
35  end
```

Surplus always wanted for cash!

THE *ORIGINAL* SURPLUS WONDERLAND!

THIS MONTH'S SELECTION FROM OUR VAST EVER CHANGING STOCKS

Surplus always wanted for cash!

LOW COST PC's -

SPECIAL BUY 'AT 286'

40Mb HD + 3Mb Ram

MITED QUANTITY only of these **12Mhz HI GRADE 286** systems ade in the USA to an industrial specification, the system was esigned for *total reliability*. The **compact case** houses the mother-oard, PSU and EGA video card with single **5¼" 1.2 Mb** floppy disk ive & **integral 40Mb hard disk drive** to the front. Real time clock th battery backup is provided as standard. Supplied in good used ondition complete with **enhanced keyboard, 640k + 2Mb RAM, OS 4.01 and 90 DAY Full Guarantee.** *Ready to Run !*
rder as HIGRADE 286 ***ONLY £129.00*** (E)

ptional Fitted extras: VGA graphics card	**£29.00**
.4Mb 3½" floppy disk drive (instead of 1.2 Mb)	**£19.95**
Vordperfect 6.0 for Dos - when 3½" FDD option ordered	**£22.50**
IE2000 Ethernet (thick, thin or twisted) network card	**£29.00**

LOW COST 486DX-33 SYSTEM

mited quantity of this 2nd user, supurb small size desktop unit. lly featured with standard simm connectors 30 & 72 pin. Supplied th keyboard, 4 Mb of RAM, SVGA monitor output, 256k cache and tegral 120 Mb IDE drive with single 1.44 Mb 3.5" floppy disk drive. lly tested and guaranteed. *Fully expandable any other options avaiable - call for details.* Only **£399.00** (E)

FLOPPY DISK DRIVES 3½" - 8"

5¼" or 3½" from only £18.95 !

assive purchases of standard 5¼" and 3½" drives enables us to esent prime product at industry beating low prices! All units (unless ated) are ***BRAND NEW*** or removed from often brand new equip-ent and are fully tested, aligned and shipped to you with a 90 day iarantee and operate from standard voltages and are of standard ze. **All are IBM-PC compatible** (if 3½" supported on your PC).

¼" **Panasonic** JU363/4 720K or equivalent RFE	**£24.95**(B)
¼" **Mitsubishi** MF355C-L. 1.4 Meg. Laptops only	**£25.95**(B)
¼" **Mitsubishi** MF355C-D. 1.4 Meg. Non laptop	**£18.95**(B)
¼" **Teac** FD-55GFR 1.2 Meg (for IBM pc's) RFE	**£18.95**(B)
¼" **Teac** FD-55F-03-U 720K 40/80 (for BBC's etc) RFE	**£29.95**(B)
¼" **BRAND NEW Mitsubishi** MF501B 360K	**£22.95**(B)
ble top case with integral PSU for HH 5¼" Flopp or HD	**£29.95**(B)
' Shugart 800/801 8" SS refurbished & tested	**£195.00**(E)
' Shugart 810 8" SS HH *Brand New*	**£195.00**(E)
' Shugart 851 8" double sided refurbished & tested	**£250.00**(E)
itsubishi M2894-63 8" double sided *NEW*	**£275.00**(E)
itsubishi M2896-63-02U 8" DS slimline *NEW*	**£285.00**(E)
ual 8" cased drives with integral power supply 2 Mb	**£499.00**(E)

HARD DISK DRIVES

nd of line purchase scoop! *Brand new* **NEC D2246** 8" 85 Mbyte ive with **industry standard SMD interface**, replaces Fujitsu quivalent model. Full manual. Only **£299.00 or 2 for £525.00** (E)

¼" **FUJI** FK-309-26 20mb MFM I/F RFE	**£59.95**(C)
¼" **CONNER** CP3024 20 mb IDE I/F (or equiv)RFE	**£59.95**(C)
¼" **CONNER** CP3044 40mb IDE I/F (or equiv.)RFE	**£69.00**(C)
¼" **RODIME** RO3057S 45mb SCSI I/F (Mac & Acorn)	**£69.00**(C)
¼" **WESTERN DIGITAL** 850mb IDE I/F ***Brand New***	**£185.00**(C)
¼" **MINISCRIBE** 3425 20mb MFM I/F (or equiv.) RFE	**£49.95**(C)
¼" **SEAGATE** ST-238R 30 mb RLL I/F Refurb	**£69.95**(C)
¼" **CDC** 94205-51 40mb HH MFM I/F RFE tested	**£69.95**(C)
¼" **HP 9754B** 850 Mb SCSI RFE tested	**£89.00**(C)
¼" **HP C3010** 2 Gbyte SCSI ***differential*** RFE tested	**£195.00**(C)
FUJITSU M2322K 160Mb SMD I/F RFE tested	**£195.00**(E)
ard disc controllers for MFM , IDE, SCSI, RLL etc. **from**	**£16.95**

THE AMAZING TELEBOX

Converts your colour monitor into a QUALITY COLOUR TV!!

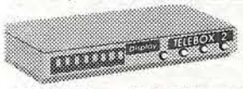

TV SOUND & VIDEO TUNER CABLE COMPATIBLE

he **TELEBOX** is an attractive fully cased mains powered unit, con-ining all electronics ready to plug into a host of video monitors ade by makers such as **MICROVITEC, ATARI, SANYO, SONY, OMMODORE, PHILIPS, TATUNG, AMSTRAD** etc. The composite deo output will also plug directly into most video recorders, allowing ception of **TV channels not normally receivable on most televi-on receivers*** (TELEBOX MB). Push button controls on the front anel allow reception of 8 fully tuneable 'off air' UHF colour television annels. **TELEBOX MB** covers virtually all television frequencies HF and UHF **including the HYPERBAND as used by most cable V operators.** A composite video output is located on the rear panel r direct connection to most makes of monitor or **desktop computer deo systems**. For complete compatibility - even for monitors with-ut sound - an integral 4 watt audio amplifier and low level Hi Fi udio output are provided as standard.

ELEBOX ST for composite video input type monitors	**£36.95**
ELEBOX STL as ST but fitted with integral speaker	**£39.50**
ELEBOX MB Multiband VHF/UHF/Cable/Hyperband tuner	**£69.95**

r overseas PAL versions state 5.5 or 6 mHz sound specification. or cable / hyperband reception Telebox MB should be connected a cable type service. Shipping code on all Teleboxe's is (B)

DC POWER SUPPLIES

Virtually every type of power supply you can imagine. Over 10,000 Power Supplies Ex Stock Call for info / list.

IC's -TRANSISTORS - DIODES

OBSOLETE - SHORT SUPPLY - BULK

6,000,000 items EX STOCK

For ***MAJOR*** *SAVINGS* - CALL FOR SEMICONDUCTOR HOTLIST

VIDEO MONITOR SPECIALS

One of the highest specification monitors you will *ever* see - At this price - Don't miss it!!

Mitsubishi FA3415ETKL 14" SVGA **Multisync** colour monitor with fine 0.28 dot pitch tube and resolution of 1024 x 768. A variety of inputs allows connection to a host of computers including **IBM PC's** in CGA, EGA, VGA & SVGA modes, **BBC, COMMODORE** (including Amiga 1200), **ARCHIMEDES** and **APPLE.** Many features: Etched faceplate, text switching and **LOW RADIATION MPR** specification. Fully guaranteed, supplied in EXCEL-LENT little used condition.
Tilt & Swivel Base £4.75 **Only £119** (E) **Order as MITS-SVGA**
VGA cable for IBM PC included.
External cables for other types of computers CALL

As New - Used on film set for 1 week only!! 15" 0.28 SVGA 1024 x 768 res. colour monitors. Swivel & tilt etc. Full 90 day guarantee. £145.00 (E)

Just In - Microvitec 20" VGA (800 x 600 res.) colour monitors. Good SH condition - from £299 - CALL for info

PHILIPS HCS35 (same style as CM8833) attractively styled 14" colour monitor with **both RGB and standard composite 15.625 Khz video inputs** via **SCART socket** and separate phono jacks. Integral audio **power amp and speaker** for **all audio visual uses.** Will connect direct to **Amiga and Atari** BBC computers. Ideal for all **video monitoring / security** applications with **direct connection to most colour cameras**. High quality with many features such as front concealed flap controls, VCR correction button etc. Good used condition - fully tested - guaranteed **Only £95** (E)
Dimensions: W14" x H13¾" x 15½" D.

PHILIPS HCS31 Ultra compact 9" colour video monitor with **standard composite 15.625 Khz video** input via SCART socket. Ideal for all monitoring / security applications. High quality, ex-equipment fully tested & guaranteed (possible minor screen burns). In attractive square black plastic case measuring W10" x H10" x 13½" D. 240 V AC mains powered. **Only £79.00** (D)

KME 10" 15M10009 high definition colour monitors with 0.28" dot pitch. Superb clarity and modern styling. Operates from any 15.625 khz sync RGB video source, with RGB analog and composite sync such as Atari, Commodore Amiga, Acorn Archimedes & BBC. Measures only 13½" x 12" x 11". Good used condition. **Only £125** (E)

20" 22" and 26" AV SPECIALS

Superbly made UK manufacture. PIL all solid state colour monitors, complete with composite video & ***optional*** sound input. Attractive teak style case. Perfect for Schools, Shops, Disco, Clubs, etc.In EXCELLENT little used condition with full 90 day guarantee.

20"....£135 22"....£155 26"....£185 (F)

SPECIAL INTEREST ITEMS

MITS. FA3445ETKL 14" Industrial spec SVGA monitors	**£245**
2kW to 400 kW - 400 Hz 3 phase power sources - ex stock	**£POA**
IBM 8230 Type 1, Token ring base unit driver	**£950**
IBM 53F5501 Token Ring ICS 20 port lobe modules	**£750**
IBM MAU Token ring distribution panel 8228-23-5050N	**£95**
AIM 501 Low distortion Oscillator 9Hz to 330Khz, IEEE	**£550**
Trend DSA 274 Data Analyser with G703(2M) 64 i/o	**£POA**
Marconi 6310 Programmable 2 to 22 GHz sweep generator	**£6500**
HP1650B Logic Analyser	**£3750**
HP3781A Pattern generator & **HP3782A** Error Detector	**£POA**
HP APOLLO RX700 system units	**£950**
HP6621A Dual Programmable GPIB PSU 0-7 V 160 watts	**£1800**
HP3081A Industrila workstation c\w Barcode swipe reader	**£175**
HP6264 Rack mount variable 0-20V @ 20A metered PSU	**£675**
HP54121A DC to 22 GHz four channel test set	**£POA**
HP7580A A1 8 pen HPGL high speed drum plotter	**£1850**
EG+G Brookdeal 9503SC Precision lock in amp	**£650**
View Eng. Mod 1200 computerised inspection system	**£POA**
Ling Dynamics 2kW programmable vibration test system	**£POA**
Computer controlled 1056 x 560 mm X Y table & controller	**£1425**
Keithley 590 CV capacitor / voltage analyser	**£POA**
Racal ICR40 dual 40 channel voice recorder system	**£3750**
Fiskers 45KVA 3 ph On Line UPS - New batts Dec.1995	**£9500**
ICI R5030UV34 Cleanline ultrasonic cleaning system	**£POA**
Mann Tally MT645 High speed line printer	**£2200**
Intel SBC 486/133SE Multibus 486 system. 8Mb Ram	**£1200**
Zeta 3220-05 A0 4 pen **HPGL** *fast* drum plotters	**£1150**
Nikon HFX-11 (Ephiphot) exposure control unit	**£1450**
Motorola VME Bus Boards & Components List. SAE / CALL	**£POA**
Trio 0-18 vdc linear, metered 30 amp bench PSU. New	**£550**
Fujitsu M3041R 600 LPM band printer	**£1950**
Fujitsu M3041D 600 LPM printer with network interface	**£1250**
Perkin Elmer 2998 Infrared spectrophotometer	**£POA**
VG Electronics 1035 TELETEXT Decoding Margin Meter	**£3750**
Andrews LARGE 3.1 m Satellite Dish + mount (For Voyager!)	**£950**
Sekonic SD 150H 18 channel digital Hybrid chart recorder	**£1995**
TAYLOR HOBSON Tallysurf amplifier / recorder	**£750**
System Video 1152 PAL waveform monitor	**£485**
Test Lab - 2 mtr square quietised acoustic test cabinets	**£300**
Kenwood 9601 PAL Vectorscope - NEW	**£650**

Please call for further details on the above items

19" RACK CABINETS

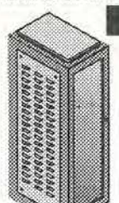

Superb quality 6 foot 40U Virtually New, Ultra Smart *Less than Half Price!*

Top quality 19" rack cabinets made in UK by **Optima Enclosures Ltd.** Units feature designer, smoked acrylic lockable front door, full height lockable half louvered back door and louvered removable side panels. Fully adjustable internal fixing struts, ready punched for any configuration of equipment mounting plus ready mounted integral 12 way 13 amp socket switched mains distribution strip make these racks some of the **most versatile we have ever sold.** Racks may be stacked side by side and therefore require only two side panels to stand singly or in multiple bays. Overall dimensions are: 77½" H x 32½" D x 22" W. **Order as:**

OPT Rack 1 Complete with removable side panels.	**£335.00** (G)
OPT Rack 2 Rack, Less side panels	**£225.00** (G)

32U - High Quality - All steel RakCab

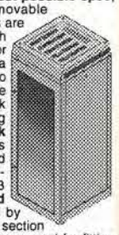

Made by **Eurocraft Enclosures** Ltd to the **highest possible spec,** rack features **all steel construction** with removable side, front and back doors. Front and back doors are **hinged for easy access** and all are lockable with five **secure 5 lever barrel locks**. The front door is constructed of double walled steel with a **'designer style'** smoked acrylic front panel to enable status indicators to be seen through the panel, yet remain unobtrusive. Internally the rack features fully slotted reinforced vertical fixing members to **take the heaviest of 19" rack equipment.** The two movable vertical fixing struts (extras available) are pre punched for standard 'cage nuts'. A **mains distribution panel** internally mounted to the bottom rear, provides 8 x IEC 3 pin Euro sockets and 1 x 13 amp 3 pin **switched utility socket.** Overall ventilation is provided by fully louvered back door and double skinned top section with top and side louvres. The top panel may be removed for fitting of **integral fans** to the sub plate etc. Other features include: fitted castors and floor levelers, prepunched utility panel at lower rear for cable / connector access etc. Supplied in **excellent,** slightly used condition with keys. Colour Royal blue. External dimensions mm=1625H x 635D x 603 W. (64" H x 25" D x 23¾" W)

Sold at LESS than a third of makers price !!

A superb buy at only £195.00 (G)

Over 1000 racks - 19" 22" & 24" wide 3 to 44 U high. Available from stock !! Call with your requirements.

TOUCH SCREEN SYSTEM

The ultimate in **'Touch Screen Technology'** made by the experts - ***MicroTouch*** - but sold at a **price below cost !!** System consists of a flat translucent glass laminated panel measuring 29.5 x 23.5 cm connected to an electronic controller PCB. The controller produces a **standard serial RS232** or TTL output which continuously gives simple serial data containing positional X & Y co-ordinates as to where a finger is touching the panel - as the finger moves, the data instantly changes. The X & Y information is given at an **incredible matrix resolution of 1024 x 1024** positions over the entire screen size !! **A host of available translation software** enables direct connection to a PC for a myriad of applications including: control panels, pointing devices, POS systems, controllers for the disabled or computer un-trained etc etc. Imagine using your finger with 'Windows', instead of a mouse !! (a driver is indeed available !) ***The applications for this amazing product are only limited by your imagination!!*** Complete system including Controller, Power Supply and Data supplied at an incredible price of only: ***£145.00*** (B)
Full MICROTOUCH software support pack and manuals for IBM compatible PC's £29.95 RFE - Tested

LOW COST RAM & CPU'S

INTEL 'ABOVE' Memory Expansion Board. Full length PC-XT and PC-AT compatible card with **2 Mbytes** of memory on board. Card is fully selectable for Expanded or Extended (286 processor and above) memory. **Full data and driver disks supplied.** RFE. Fully tested and guaranteed. Windows compatible. **£59.95**(A1)
Half length 8 bit memory upgrade cards for PC AT XT expands memory either 256k or 512k in 64k steps. May also be used to fill in RAM above 640k DOS limit. Complete with data.
Order as: XT RAM UG. 256k. £34.95 *or* **512k £39.95** (A1)

SIMM SPECIALS

1 MB x 9 SIMM 9 chip 120ns	**Only**	**£16.50**	(A1)
1 MB x 9 SIMM 3 chip 80 ns **£19.50** or 70ns		**£22.95**	(A1)
1 MB x 9 SIMM 9 chip 80 ns **£21.50** or 70ns		**£23.75**	(A1)
4 MB 70 ns 72 pin SIMM - ***with parity-***	**Only**	**£95.00**	(A1)
INTEL 486-DX33 CPU £55.00 INTEL 486-DX66 CPU		**£69.00**	(A1)
FULL RANGE OF CO-PROCESSOR'S EX STOCK - CALL FOR £££			

FANS & BLOWERS

EPSON DO412 40x40x20 mm 12v DC	**£7.95 10 / £65**
PAPST TYPE 612 60x60x25 mm 12v DC	**£8.95 10 / £75**
MITSUBISHI MMF-D6D12DL 60x60x25 mm 12v DC	**£4.95 10 / £42**
MITSUBISHI MMF-08C12DM 80x80x25 mm 12v DC	**£5.25 10 / £49**
MITSUBISHI MMF-09B12DH 92x92x25 mm 12v DC	**£5.95 10 / £53**
PANCAKE 12-3.5 92x92x18 mm 12v DC	**£7.95 10 / £69**
EX-EQUIP AC fans. ALL TESTED 120 x 120 x 38 mm specify 110 or 240 v **£6.95.** 80 x 80 x 38 mm - specify 110 or 240 v **£5.95**	
IMHOF B26 1900 rack mnt 3U x 19" Blower 110/240v NEW	**£79.95**

Shipping on all fans (A). Blowers (B). ***50,000 Fans Ex Stock CALL***

ssue 13 of *Display News* now available - send large SAE - PACKED with bargains!

DISPLAY -ELECTRONICS-

ALL MAIL & OFFICES Open Mon-Fri 9.00-5:30 Dept WW. 32 Biggin Way Upper Norwood LONDON SE19 3XF

LONDON SHOP Open Mon - Sat 9:00 - 5:30 215 Whitehorse Lane South Norwood On 68A Bus Route Nr.Thornton Heath & Selhurst Park SR Rail Stations

NEW **DISTEL©** The Original FREE On line Database Info on 20,000 + stock items! RETURNING SOON !

ALL ☎ ENQUIRIES 0181 679 4414 FAX 0181 679 1927

WITCH MasterCard VISA EST 25 YEARS

All prices for UK Mainland. UK customers add 17.5% VAT to TOTAL order amount. Minimum order £10. Bona Fide account orders accepted from Government, Schools, Universities and Local Authorities - minimum account order £50. Cheques over £100 are subject to 10 working days clearance. Carriage charges (A)=£3.00, (A1)=£4.00, (B)=£5.50, (C)=£8.50, (D)=£12.00, (E)=£15.00, (F)=£18.00, (G)=CALL. Allow approx 6 days for shipping - faster CALL. Scotland surcharge CALL. All goods supplied to our Standard Conditions of Sale and unless stated guaranteed for 90 days. All guarantees on a return to base basis. All rights reserved to change prices / specifications without prior notice. Orders subject to stock. Discounts for volume. Top CASH prices paid for surplus goods. All trademarks etc acknowledged. © Display Electronics 1996. E & O E. 06/6

CIRCLE NO. 131 ON REPLY CARD

NEW PRODUCTS CLASSIFIED

Please quote *"Electronics World"* when seeking further information

ACTIVE

Discrete active devices

High-temperature mosfets. Designed particularly for use in vehicles, Temic's new, small, power mosfets in the SO-8 *Little Foot* family withstand temperatures to 175°C. There are four devices: *Si4946/4948EY* are dual 60V types in both p-channel and n-channel; *Si4949/4559EY* are complementary n/p-channel types varying in breakdown voltage. On resistance is down to 55mΩ at 10V. Siliconix/Temic Marketing. Tel., 01344 485 757; fax, 01344 427 371.
Enquiry no 501

Linear integrated circuits

Voltage regulators/detectors. New voltage regulators by Holtek are low in most particulars: power, dropout, temp. co. and cost, to name a few. Input to the *HT10XX/71XX/72XX/79LXX* is 12V or 24V maximum and outputs are fixed values in the 1.5-12V range. Detectors in the *HT70XX* series are again low in most areas, except stability, and are meant for use in alarms, power failure detectors,etc. Both series are available in TO92 and SOT89. Joseph Electronics Ltd. Tel., 0121 643 6999; fax, 0121 643 2011.
Enquiry no 502

Precise isolation amplifier. *ISO124* from Burr-Brown is a 1.5kV isolation amplifier with a linearity of 0.01%. The technique used is a capacitive barrier, in which a digital pwm method of signal transfer across the galvanic isolation barrier provides good accuracy and immunity to transients. Bandwidth is 50kHz, supply range ±4.5V to ±18V at a quiescent current of 7mA. Burr-Brown International. Tel., 01923 233837; fax, 01923 233979.
Enquiry no 503

3V, 1GHz amplifiers. Maxim's *MAX2630/2633* 50Ω amplifiers each provide a –3dB bandwidth of over 1GHz when running from 2.7-5.5V at 6.6mA and with a shutdown current of 1µA. No external components are needed for bias adjustment; only blocking capacitors and decoupling are required. *MAX 2631/2633* versions have the same requirements but also need an external bias resistor. Maxim Integrated Products UK Ltd. Tel., 01734 303 388; fax, 01734 305 511.
Enquiry no 560

Microprocessors and controllers

266/300MHz microprocessors. Centaur Technology announces the imminent appearance of the *IDT WinChip C6+* processor, the first version to come in the first half of 1998 being the 266MHz type. These are Pentium class devices providing high-performance MMX and 3-D graphics, doubled since the introduction of the C6; integer performance is assisted by the provision of branch prediction. There are dual MMX units and 53 new z86 instructions. Integrated Device Technology. Tel., 01372 363 339; fax, 01372 378 851.
Enquiry no 504

Mixed-signal ICs

300MHz bidirectional switches. Maxim's *MAX4545/6/7* low-voltage cmos T-switches are for rf and video work to 300MHz at 50Ω and 75Ω. *MAX4545* is a quad device with normally-open, spst switches, *4546* has two dual spst switches of either type and the *4547* two spdt switches. In 50Ω circuits at 10MHz, crosstalk and off isolation are both –80dB and insertion loss at 100MHz is 1dB. All versions cope with rail-to-rail signals in either direction. On resistance is 20Ω max. with ±5V supplies, matched to within 1Ω and flat to within 0.5Ω over the signal range. Leakage is 5nA at 25°C and 50nA at 85°C. Maxim Integrated Products UK Ltd. Tel., 01734 303 388; fax, 01734 305 511.
Enquiry no 505

Microwave components

GaAs switches. Four gallium arsenide microwave switch ics with integral asic drivers are introduced by M/A-COM. The devices are compatible with ttl or cmos control circuitry and work in the frequency ranges 0-1GHz and 1-3GHz, losses being 0.7dB-1.2dB and 0.8dB-1.4dB respectively. They are single-pole switches, single, dual and four-way switching. BFI IBEXSA Electronics Ltd. Tel., 01622 882 467; fax, 01622 882 469.
Enquiry no 506

Power semiconductors

Quad fet driver. Unitrode's *UCC3776* is a high-speed, high-current , four-output driver ic, meant to drive the gates of power mosfets in switched-mode power supplies, motor drives, actuator drivers, pin diodes and power management. Each of the four outputs delivers 1.5A peak gate drive 6A when paralleled) and will sink 2A (8A paralleled) for rapid turn-off. Facilities include under-voltage lockout, enable and polarity selection to allow the choice of inverting or non-inverting input-to-output commands. Logic level is 5V HCMOS-compatible to provide simple interfacing between logic and power. Unitrode (UK) Ltd. Tel., 0181 318 1431; fax, 0181 318 2549.
Enquiry no 553

PASSIVE

Passive components

Tantalum electrolytics. Nippon Chemi-Con *MC Series* electrolytic chip capacitors are available in the 0.047-68µF range at ratings of 4-50V dc. Sizes are from 6 by 3.2 by 2.5mm (50V, 1µF) to 7.3 by 4.3 by 2.8mm (25V, 10µF). Operating temperature is –55°C to 125°C with voltage derating above 85°C and leakage current is less than 0.01*CV* or 0.5µA after five minutes of voltage being applied at 20°C. Young-ECC Electronics. Tel., 01628 810 727; fax, 01628 810 807.
Enquiry no 509

Rfi-suppression capacitors. Capacitors in Schaffner's *WXP Series* of suppression components are made using metallised polypropylene film, which confers a lower dissipation factor for better hf performance and the ability to withstand higher voltages than in polyester types. Values range from 0.01µF to 2.2µF at 250V ac at up to 440Hz and all devices pass the 2kV for 2s safety test. All are self-healing and all are tested to international standards. Schaffner EMC Ltd. Tel., 01734 770 070; fax, 01734 792 969.
Enquiry no 511

S-m capacitors. Wima offers surface-mounted rfi suppression capacitors for Class X2 and Y2 applications. *MP-X2* and *MP-Y2* components are available in values from 1000pF (X2) and 1000pF to 4700pF (Y2),with insulation resistance over 12GΩ. They are resin-impregnated, sealed in self-extinguishing cast resin, are self-healing and operate at up to 110°C. Acal Electronics Ltd. Tel., 01344 727 272; fax, 01344 424 262.
Enquiry no 512

Audio products

Dsp/codec. On one chip, AKM's *AK7712A* is a 32-bit digital signal processor and 20-bit coder/decoder for audio work. The two-channel, 64-times oversampling delta-sigma modulator converts stereo analogue input to digital data for the dsp, sampling at 32kHz or 48kHz, and clock frequencies at 576, 512, 384 and 256 times the sampling frequency are accepted for a variety of applications. A-to-d conversion, with a

Conference camera. *Vision Dual* is a cmos digital colour camera providing Universal Serial Bus (for hot-swap plug-and-play) or parallel-port interfacing in the one unit. It is compatible with all pcs with out compromise, providing high resolution in 24-bit colour at up to 30 frames a second in USB mode and formatted CIF video for H.323 and H.324 videoconferring. The camera has digital zoom and a pass-through printer connection in parallel-port working. It also appears to resemble a rugby football. VLSI Vision Ltd. Tel., 0131 539 7111; fax, 0131 539 7141.
Enquiry no 507

dynamic range of 98dB, has a sinad ratio of 90dB, while the d-to-a converter has a dynamic range of 98dB and sinad of 87dB. Four channels give LR stereo, centre and rear channels for surround sound. Asahi Kasei Microsystems Ltd. Tel., 01923 226 988; fax, 01923 226 933.
Enquiry no 513

Connectors and cabling

Shielded mains inlet. IEC mains connectors by Schurter provide screening in a low-cost plastic package. *Groundfit GRF2* connectors eliminate the inevitable leakage between panel holes and connector by having an emc screen with flexible steel contacts to provide a good earth through the panel. No mounting tools are needed, since the 24mm deep connectors snap into the inside of the panel, the flexible shield is then screwed to the panel. Radiatron Components Ltd. Tel.,01784 439 393; fax, 01784 477 333.
Enquiry no 514

Impervious connector. ITT Cannon's *CA-Bayonet* connector is claimed to be the ultimate environment solution. Global warming aside, this is a bayonet version of the threaded MIL-C-5015 connector and comes in black zinc cobalt, electroless nickel and standard military olive drab. It is meant for use in such applications as power transmission and signal carrying in off-road vehicles and the like, being resistant to shock and vibration and coping with temperatures between –55°C and 125°C. It can be provided with up to 85 ways, is rated at up to 245A and is sealed to IP67. PEI-Genesis UK. Tel., 01797 322 003; fax, 01797 321 589.
Enquiry no 515

Screwless terminal blocks. Wires going to CEL board-mounted terminal blocks are simply pushed into the sockets, the connection being sufficiently solid to enable a 2A/600V rating. Lugs to locate and retain the blocks on the board during soldering are present, material used being white flame-retardant UL94V-0 glass-filled polyester. Blocks are available with between three and ten ways. Anglia. Tel., 01945 474 747; fax, 01945 474 849.
Enquiry no 516

Pcb terminal blocks. Metway *650TD* and *690T* series of low-cost,low-profile 240V ac terminal blocks are 5mm pitch pcb-mounted types that give side entry with a height of 10mm. The 650TD version has screw terminals and the 690T unit screwless, push-button connectors, both being available in two or three way form. They are made in polycarbonate UL94 V0 rated material and withstand temperatures to 120°C; current rating for the 650 is 16A and for the 690, 6A. Hawnt Electronics Ltd. Tel., 0121 7843 355; fax, 0121 7831657.
Enquiry no 517

Axial-lead inductors. Inductors in TFC's new range are high-*Q*, sub-miniature devices with values in the range 0.1µH-10000µH, all having axial lead outs and contained in either epoxy-coated or moulded polypropylene cases. In the *EC22* ferrite-cored series, for example, the range of values is 0.1µH to 220µH, a novel wire-to-ferrite termination providing good mechanical strength. There is also the *VC0410*, a filter choke for power supply line filtering. Total Frequency Control Ltd. Tel., 01903 745513; fax, 01903 742208; e-mail, eddie@tfc.co.uk.
Enquiry no 510

Crystals

ETSI crystals. Crystals to enable existing E1 telecomms line interface units to meet the new ETSI CTR-12 standard with no further modification are introduced by Crystal Semiconductor. *CXT8192A* crystals are designed to meet the jitter attenuation requirements of CTR-12. Also available are *CS61575* and *CS61304A* which have enough jitter attenuation to meet the requirements. Sequoia Technology Ltd. Tel., 0118 925 8000; fax, 0118 925 8020.
Enquiry no 518

Displays

12.1in SVGA lcd. Sharp Electronics in Germany announces a colour stn liquid-crystal display, the *LM80C312*, with a diagonal of 12.1in (31cm), which is equivalent to 14-in crt. Resolution is 800 by 600 and contrast ratio 25:1; a dual backlight method providing 200cd/m^2 brightness with a claimed lifetime of 17000h. A new type of film affords an increase in viewing angle to 120° horizontally and 90° vertically. The company also announces two other displays: the *LQ12S41* 12.1-in SVGA tft and a 15-in xga tft, the *LQ15X01W*,which has a resolution of 1025 by 786 and a horizontal viewing angle of 140°. Sharp Electronics (Europe) GmbH. Tel., 0049 040-2376-2215; fax, 0049 040-2376-2991.
Enquiry no 519

Hardware

Plastic enclosures. *Patina* is the name of a new range of grey ABS plastic boxes from Vero, which comes in twelve heights on four plan sizes, the largest being 205 by 140mm in plan and the smallest 125 by 65mm. The cases take boards in both vertical and horizontal planes and have removable anodised aluminium front and rear panels. Larger ones screw together and the smaller sizes are clipped. Vero Electronics Ltd. Tel., 01703 266 300; fax, 01703 265 126.
Enquiry no 521

Screened plug-ins. SRS has a range of emc-screened plug-in modules in 3U and 6U heights,160mm and 220mm depth and from 7HP to 42HP wide, all being supplied in kit form. Front panels are in two parts: the inner one carrying the screening and the outer with a satin anodised finish. Inside, a two-rail system takes single boards or a four-rail system can be used to take two boards with the strength to accept heavier components. Sub Rack System Products Ltd. Tel., 01289 635500; fax, 01279 451220.
Enquiry no 522

Test and measurement

Spectrum analysis on a pc. A standard pc becomes a 1.6GHz spectrum analyser when a Chase *9052* plug-in unit is installed in three ISA slots; control of analyser functions is then by mouse and keyboard, a virtual instrument appearing on screen. Frequency limitations imposed by computer clock rate do not apply, since a synthesised frequency source is used. Features include remote access for signal capture throughout a network, and a function known as burst mode, in which the frequency span is divided into a number of smaller parts in which the analyser stays, holding peak or minimum signal for each cell and waiting at a given frequency for a suspect transient to appear. Four traces in different colours can be shown and the instrument may be used as a pass/fail indicator with transparent overlays to show standards. Noise sidebands from the synthesiser are less than –90dBc/Hz at 30kHz or more offset. Chase EMC. Tel., 01306 713 333; fax, 01306 713 303.
Enquiry no 523

Cameras

Digital camera. Sony Broadcast has introduced its second colour camera using the IEEE-1394 serial bus standard, the *DFW-V300*, which allows images to be captured and input digitally to a pc or printer. It is intended for use in image processing, medical imaging and videoconferences or may be attached to a microscope. The IEEE-1394 standard is being adopted by the majority of pc makers. Sony Broadcast and Professional UK. Tel., 01932 816 000; fax, 01932 817 001.
Enquiry no 508

Static meter. Actually, this Teknis *DM EX164* hand-held static meter is very mobile. It is also easy to use, has a good lcd, good repeatability, low drift, a high input impedance and fast zeroing. Operating range is 0-20kV in 10V increments and its PP3 battery keeps it on the road for 500h continuously. It comes with a case, earth line and a calibration certificate and represents a reliable way to counter problems caused by esd. Teknis Ltd. Tel., 01823 481 248; fax, 01823 481 120.
Enquiry no 524

100MHz logic analyser. TTi's *TA320S* logic analyser has 32 channels and 100MHz acquisition, its lcd showing high-resolution graphics or 40-column text. Control and data entry are by combined soft keys and keypad and an RS-232 interface allows data exchange with a pc. The 100MHz acquisition is for eight channels in asynchronous mode (25MHz for 32 channels in either mode) and glitch capture copes with 5ns events. Various data pods are available for different applications. State and timing displays are selectable, data being grouped under user-defined names and full search and compare facilities are provided, as is storage of setups and acquisitions. Disassembler pods support a range of microprocessors, each having its own software. Thurlby Thandar Instruments Ltd. Tel., 01480 412 451; fax, 01480 450 409.
Enquiry no 525

Interfaces

Card for Macs. Pc cards are now available for users of Apple Macintosh computers. *PEL-10* is a PC Card interface which, with a SCSI connection, is a simple method of working with Mac, Unix, dos and Windows. Connection is by a standard DB25 socket for plug-and-play use. The Type III slot takes all major memory cards, flash disk, hard disk, sram, flash, compact flash and smart media. The unit provides 3Mbyte/s asynchronous data transfer, hot swapping and card recognition. Premier Electronics Ltd. Tel., 01922 634 652; fax, 01922 634 616.
Enquiry no 526

Filters

S-m pi filter. Joining the range of surface-mounted emi filters by Syfer Technology is a new 10A pi-filter, combining multilayer techniques with feedthrough filter design. It is meant for use on power lines on printed boards because of its high insertion loss over a wide band; for partition mounting, the capacitors can be supplied with a ground band around them. In 17 values, the range is 1nF to 470nF at 500V dc in values to 100nF. Weight is 0.5g and the units are 6.6 by 5 by 3mm. Syfer Technology Ltd. Tel., 01603 629 721; fax, 01603 665 001.
Enquiry no 520

Literature

Emc. A free catalogue of test equipment, accessories and services for rf emc testing is produced by Chase. The section on immunity describes test chambers, software, antennae, amplifiers and probes, while the emissions part is on emc testing packages with antennae, software, probes and clamps. A further section details test services available, including NAMAS accredited antenna and chamber calibration, product testing and Radio Type Approval. Chase EMC. Tel., 01306 713 333; fax, 01306 713 303.
Enquiry no 527

Telemetry information. Radio-Tech has published its tenth edition of Telemetry News covering updates on the company's products as well as news on customer applications. Among the products covered in this issue are micro-power telemetry transmitter with fuzzy-logic inputs and 5km ranges, and a wireless industrial LAN systems operating at 2.5GHz. Radio-Tech Ltd. Tel. 01992 576 107; fax, 01992 561 994, e-mail radtec@radtec.demon.co.uk.
Enquiry no 528

Better website for IR. International Rectifier has revamped its website to give better access to the information library on products and to provide hyperlinks to IR distributors for ordering or requesting more information on products. There are also application notes and design information as well as the product data. IR's 1997 short catalogue is shown in pdf format for viewing and down-loading as a pdf file to be read using the Adobe Acrobat 3.0 Reader, which is freeware from http://www.adobe.com. International Rectifier. Tel., 01883 732 020; fax, 01883 733 410.
Enquiry no 529

Enclosures/rackmounts. Vero offers two brochures: *KM6-II* subracks and *Diplomat-RF* desktop enclosures. Both types are designed to attenuate rf and are both compatible with earlier products, including accessories. Details of the accessories and additional screening elements are included. Vero Electronics Ltd. Tel., 01703 266 300; fax, 01703 265 126.
Enquiry no 530

Frequency control. A new catalogue from *Frequency Products* describes a range of crystals, oscillators, filters and other, associated products. There is also an introductory section giving a short overview of crystal theory and providing definitions of terms. Frequency Products Ltd. Tel., 01460 57166; fax, 01460 57777.
Enquiry no 531

Materials

Peelable solder masks. Two liquid solder masks from Tech Spray provide good masking, curing and peeling characteristics. *Wondermask P* is a thixotropic acrylic latex type for the protection of plated-through holes, contacts and card surfaces during soldering, fluxing, wave soldering and cleaning, and is heat stable. *Wondermask PL Latex* is similar, but is a natural acrylic latex for faster drying and better peel strength. Both can be applied by robotic, pneumatic or hand dispenser or by screening. Intertronics Ltd. Tel., 01865 842 842; fax, 01865 842 172.
Enquiry no 532

Cooling. Keratherm *Softtherm Type 86/200* is a heat-conductive material to use between a component and its heat sink. It is conformable, comes in thicknesses from 1mm to 5mm and will fill air gaps and voids on uneven surfaces. Breakdown strength is over 5kV and thermal conductivity 1W/mK. Young-ECC Electronics. Tel., 01628 810 727; fax, 01628 810 807.
Enquiry no 533

Power supplies

Little plug-in. *Mainy-N1* is a very small, 1% accurate, plug-in power supply taking up about the same space on a wall socket as a mains plug, so you can use adjacent sockets. It is a switched-mode design giving 70% efficiency and being capable of maintaining the 1% output voltage accuracy regardless of load or mains twitches. There is an EN 60 61 low leakage-current version for use with medical equipment and a special telecomms type for modems. Ten standard outputs are available between 3V and 24V, all having a 6W rating, and pins are UK three-pin type and an IEC European format. Relec Electronics Ltd. Tel., 01962 863 141; fax, 01962 855 987.
Enquiry no 534

Photo sensor. Matsushita has the *UZD3* range of trigonometric photoelectric sensors, which provide a sensing range of 20cm to 2m, the range being unaffected by the object's colour. Detection distance is changeable by a potentiometer and the arrangement of two sensors allows reliable detection in misty or oily atmospheres. Both n-p-n and p-n-p types are available, with or without cable connectors. Matsushita Automation Controls Ltd. Tel., 01908 231 555; fax, 01908 231 599.
Enquiry no 540

UK-US voltage changer. One of those devices for which the world will be a better place is BBH Windings' voltage changer, which retrieves the situation when someone comes back from the US with a new gizmo and discovers that it is for 110V only; an American friend of mine has his house cluttered with enormous transformers for this job. This one puts out 150W at 110V ac from 240V ac, the socket being a American two-pin style. It has an autoreset thermal trip in the windings. BBH Windings Ltd. Tel., 01388 602 265; fax, 01388 608 774.
Enquiry no 535

Low-quiescent regulator. Zetex's *ZMR H Series* of miniature voltage regulators take a 50µA quiescent current to supply 50mA of load from a input voltage of up to 25V. Versions are available to give 2.5V or 5V output. First in the series are the *ZMR 25H* for an input of 22.5V and the *ZMY 50H* for a 25V input. The regulators are unconditionally stable and need no output capacitor, and thermal overload protection is present. Zetex plc. Tel., 0161 627 5105; fax, 0161 627 5467.
Enquiry no 536

Linear supplies. Providing single, dual and triple outputs at up to 480W total, linear power supplies by

Please quote *"Electronics World"* when seeking further information

Chloride are of an open-frame design, are of simple, and therefore reliable, design and give low noise and ripple with good stabilisation and regulation. Standard outputs are 5, 6, 12, 15, 24, 28, 36 and 40V. Chloride Powerline. Tel., 01734 868 567; fax, 01734 755 172.
Enquiry no 537

15W s-m power supply. *PKS 2000/4000 SI* power modules are said by Ericsson to be the first true surface-mounted 15W dc-to-dc converters to become available. Inputs accepted are 24V or 48/60V and outputs in the 3.3V to 15V range. Switching frequency is fixed and load transient response time is 200µs. No forced-air cooling or extra heat sink is needed; maximum case temperature is 100°C. These units are designed for pick-and-place insertion and measure 36.8 by 41.7 by 9.7mm. Ericsson Components AB. Tel., 01793 488 300; fax, 01793 488 301.
Enquiry no 539

Protection devices

Safe fuse holders. *Untouchables* by Bulgin are fuse holders exceeding the requirements of Category PC3 of IEC 127-6, which stipulates that you must not be able to touch anything live with or without a fuse being in place with the holder installed or during withdrawal or insertion of a fuse. These are a captive type, in which the fuselink is held in a plastic moulding which is released by a screwdriver, the fuselink not being accessible until then. Rating is 250V at 10A for both panel-mounting and board-mounting styles. Gothic Crellon Ltd. Tel., 01734 788 878; fax, 01734 776 095.

Fire protection. Vero announces an improved version of the *FPU-2 Fire Protection Unit*, which fits into the top 2U of any 19in rack and sets off alarms if it sniffs any smoke. Not only that, but it can take a canister of safe extinguisher with which to put the fire out, alarms sounding and illuminating and the extinguisher going into action when the amount of smoke obscures visibility by 3%. If more than one rack needs protection, a single fpu will control two others, which have their own detectors and extinguishers. Power comes from the ups and powers the equipment's cooling fans, which are switched off when fire is detected. A rechargeable battery supplies power after mains is lost. Vero Electronics Ltd. Tel., 01703 266 300; fax, 01703 265 126.
Enquiry no 538

Transducers and sensors

Gear-tooth sensor. Providing accurate gear edge detection down to low speeds, the *ATS612* sensor by Allegro consists of a 9mm diameter plastic shell containing a samarium cobalt magnet, a pole piece and a differential Hall ic. Processing includes self-calibration of a 5-bit a-to-d-to-a converter to normalise the gain to reduce the effect of air-gap changes. A peak-detecting filter removes magnet and system offsets and compensates for fast changes caused by wobbling or eccentricities while operating at low speeds. Allegro MicroSystems Inc. Tel., 01932 253 355; fax, 01932 246 622.
Enquiry no 541

Motorola debugger. With support for Motorola's newest microprocessors in embedded systems, the Noral *Flex* real-time debugging software runs under Windows NT 3.51 and 4.0 and is independent of any hardware. It may be used with in-circuit emulators and background debug mode hardware, working independently of file formats. Register configurations are shown on screen. Noral Micrologics Ltd. Tel., 01254 295 800; fax, 01254 295 802
Enquiry no 552

Inclinometer. Midori's *PMP-S10LX-1* inclinometer is a contactless type using a magneto-resistive element and magnet mounted on a spring plate pendulum, damped by silicon oil. There are models with optional temperature compensation. Voltage required is 14V dc maximum, into around 30kΩ, and output impedance 10MΩ. Kynmore Engineering Co. Ltd. Tel., 0171 405 6060; fax, 0171 405 2040.
Enquiry no 542

COMPUTER

Computers

Rackmount computer. A Pentium 200 version of the *KPR II* rack-mounted computer is announced by Kontron Elektronik. It is protected to IP54 for industrial use, has a positive-pressure ventilation system and a lockable door to discourage tampering. The unit is 4U high, has up to eight expansion slots and either 14-in or 17-in monitor, which can be remotely sited. A 3.5-in floppy drive is standard and there is space for an extra drive, which may be floppy, CD-rom or removable hard disk. Kontron Elektronik Ltd. Tel., 01923 421 521; fax, 01923 254 118.
Enquiry no 543

Data acquisition

Windows for data. Analog Devices dsp-based *RTI-2100 Series* data acquisition boards now have Windows 3.1, '95 and NT support. These operating systems are supplied at no extra cost for several *RTI* software packages including *RTI-Stat* acquisition program, the *RTI-DAQ* software driver for development and the *RTI-LVRDV* third-party driver for National's *LabView*. Performance of the on-board *ADSP-2101* dsp is maximised to enhance system efficiency by allowing it to control channel and gain switching, data movement and data packing. With much of its capacity left, it also assists with signal filtering and averaging. Repeat string operations using 16-bit and 32-bit instructions allow data to be passed to main memory much more rapidly than is done by dma transfer, resulting in a 1MHz sampling rate under both dos and Windows. Analog Devices Ltd. Tel., 01932 266 000; fax, 01932 247 401.
Enquiry no 544

Programmable signal conditioner. *M3000* by Micro Movements is a 16-channel, programmable signal conditioning system that links via RS232 or IEEE 488 with a pc to provide real-time data acquisition, archiving or analysis using the *SnapMaster* software, a range of plug-in, analogue-output modules taking all types of transducer. It may be extended to give 256 channels by the use of more mainframes and modules. All conditioning functions are programmed by the pc to give controllable bridge voltage, gain, auto zero, filtering and diagnostics. Scanning is at the rate of up to 20kHz/channel, data being stored in the pc. Micro Movements Ltd. Tel., 0118 973 0200; fax, 0118 932 8872.
Enquiry no 545

Software

Dso software. Kenwood's *DCS 7000* digital storage oscilloscopes now have a free software package with every RS232 interface bought, the software enabling communication between the oscilloscope and a pc running Windows 3.1 or '95. The effect is to show the oscilloscope screen on the pc's screen to display the acquisition and/or the reference channels. Once in the pc, it can then be handled in the normal way for saving a bit-mapped picture, printing or exporting to other documents, a text window appearing to allow the data to be described before saving. Kenwood UK Ltd. Tel., 01923 655 292; fax, 01923 655 297.
Enquiry no 551

Development and evaluation

PIC17Cxxx development. Microchip announces two aids to PIC17Cxxx development: Version 2.00 of the *MPLAB-C* C compiler and the new version of the *PICmaster* in-circuit emulator. *MPLAB-C* is a complete compiler, version 2.00 generating relocatable code to link with PICmicro libraries, user-defined libraries and MPASM assembled objects. It supports interrupt routines, generates efficient code and provides re-entrant code and floating-point support. The emulator supports PIC17C756, which is the highest-performance 8-bit one-time-programmable microcontroller. It has real-time program memory instruction emulation and multiprocessor emulation. There is an emulator pod, target-specific emulator probe, Pro Mate II programmer, host-interface card and emulation control software and demo hardware and software. Arizona Microchip Technology Ltd. Tel., 01628 851 077; fax, 01628 850 259.
Enquiry no 546

Mass storage systems

Solid-state disk. From Advantech comes the *PCD-893* solid-state disk ISA card, which can use up to 4Mbyte of sram, eprom or flash memory to replace a floppy drive, or standard IDE hard-disk drive flash modules or DiskOnChip 2000 flash memory up to 24Mbyte to replace a hard disk. Semicom UK Ltd. Tel., 01279 422 224; fax, 01279 433 339.
Enquiry no 547

Computer peripherals

Tough keyboard. To read some of these notices, it sometimes seems as though gangs of skinheads are roaming our factories, intent on demolishing everything in their path. At any rate, nutter-proof equipment continues to appear and this Secme keyboard should defeat their object. It is a 12-key model, front or rear mounted, from which the keys cannot be wrenched off and provides IP67 front sealing when the appropriate gasket is used. Keys have a "feel" to them and each has yellow led lighting. An 8-way connector is included for matrix switching. EAO-Highland Electronics Ltd. Tel., 01444 236 000; fax, 01444 236 641.
Enquiry no 548

Programming hardware

Universal programmer. ICE Technology has a new programmer, the *Micromaster LV48* 48-pin dil universal type supporting about 200 microcontrollers without adapters (adapters for non-dil and other packages) and also coping with most kinds of memories and arrays. It has logic levels of 1.8V, 3.3V and 5V and uses makers' own algorithms to allow rapid programming; an example given is a PIC16C54 in half a second. Additionally, the instrument will test memories and optional emulator cards allow the testing of code before programming. ICE Technology Ltd. Tel., 01226 767 404; fax, 01226 370 434.
Enquiry no 549

Data analysis. All Yokogawa's recording and data logging instruments can now be provided with *Acraview* data-analysis software. The range includes 300-channel loggers, pen recorders and thermal-array recorders, all being digital in operation. Data captured by all these instruments can now be transferred to a pc directly or on disc made by the instruments built-in drives, where ASCII conversion is carried out to allow data to be incorporated in spreadsheets such as Excel. Data is shown in colour on the pc and analysis performed, maths functions combining recorded data to produce further, computed "channels!". Virtual instruments can also be shown, as can *y/t* and *x/y* displays. Martron Instruments Ltd. Tel., 01494 459 200; fax, 01494 535 002. ■
Enquiry no 550

ADVERTISE FREE OF CHARGE

Subscribers* to *Electronics World* can advertise their electronic and electrical equipment completely free of charge

Simply write your ad in the form below, using one word per box, up to a maximum of twenty words. Remember to include your telephone number as one word. **You must include your latest mailing label with your form.**

* This free offer applies to private subscribers only. Your ad will be placed in the first available issue.

This offer applies to private sales of electrical and electronic equipment only.

Trade advertisers – call Joannah Cox on 0181-652 3620

All adverts will be placed as soon as possible. However, we are unable to guarantee insertion dates. We regret that we are unable to enter into correspondence with readers using this service, we also reserve the right to reject adverts which do not fulfil the terms of this offer.

Please send your completed forms to:

Free Classified Offer: Electronics World, L333, Quadrant House, The Quadrant, Sutton, Surrey SM2 5AS

SMALL SELECTION ONLY LISTED – EXPORT TRADE AND QUANTITY DISCOUNTS – RING US FOR YOUR REQUIREMENTS WHICH MAY BE IN STOCK

HP New Colour Spectrum Analysers
HP141T+ 8552B IF + 8553B RF–1KHz-110Mc/s – £700.
HP141T+ 8552B IF + 8554B RF – 100KHz-1250Mc/s – £900.
HP141T+ 8552B IF + 8556A RF – 20Hz-300KHz – £700.
HP141T+ 8552B IF + 8555A 10MC/S-18GHzS – £1200.
HP8443A Tracking Generator Counter 100KHz-110Mc/s – £200.
HP8445B Tracking Preselector DC to 18GHz – £250.
HP8444A Tracking Generator • 5-1300Mc/s – £700.
HP8444A OPT 059 Tracking Generator • 5-1500Mc/s – £950.
HP35601A Spectrum Anz Interface – £500.
HP4953A Protocol Anz – £400.
HP8970A Noise Figure Meter + 346B Noise Head – £3.5K.
HP8755A Scalar Network Anz PI – £250 + MF 180C – £200 Heads 11664 Extra.
HP8756A Scalar Network Anz – £1000 Heads 11664 Extra.
HP8757A Scalar Network Anz – £2500 Heads 11664 Extra.
HP8903A Audio Anz – £1500.
HP8656A 100KHz – 900 Mc/s, S/G AM-FM – £1450.
HP8158B Optical Attenuator OPT 002 + 001 1300-1550NM – £600.
HP3709B Constellation ANZ £2k.
HP11715A AM-FM Test Source – £750.
INTELCO 220 Single Mode Optical Attenuator 1532NM – £300.
FARNELL TVS70MKII PU 0-70V 10 amps – £150.
FARNELL PSG 520 S/G 10Mc/s AM-FM – £150.
TEK 475 Oscilloscopes 200Mc/s – £350. 475A 250Mc/s – £400.
MARCONI 6500 Network Scaler Anz – £750. Heads available to 40GHz.
HP3580A 5Hz-50KHz ANZ – £750-£1000.
HP3582A .02Hz to 25.6KHz – £2k.
TEK 7L5 + L3 – Opt 25 Tracking Gen – £900.
TEK 7L12 – 100KHz-1800Mc/s – £1000.
TEK 7L18 – 1.5-60GHzs – £1500.
Mixers are available for the above ANZ's to 60GHz
HP8673D Signal Generator .05-26.5GHz _ £15K.
Systron Donner 1618B Microwave AM FM Synthesizer 50Mc/s 2-18GHzs.
R&S SWP Sweep Generator Synthesizer AM FM 4-2500Mc/s – £1k.
ADRET 3310A FX Synthesizer 300Hz-60Mc/s –£600.
HP5316B Universal Counter A+B.
HP461A-465A-467A Ampliers.
HP81519A Optical Receiver DC-400Mc/s. 550-950NM £400.
HP Plotters 7470A-7475A. Up to £250.
HP3730A+3737A Down Convertor Oscillator 3.5-6.5GHz.
HP Microwave Amps 491-492-493-494-495-1GHz-12.4GHz – £250.
HP105B Quartz Oscillator + HP5087A Dis Amp £500.
HP6034A System Power Supply 0-60V 0-10A-200W – £500.
HP6131C Digital Voltage Source + –100V ½ Amp.
HP3779A Primary Multiplex Analyser – £200.
HP3779C Primary Multiplex Analyser – £300.
HP1631D Logic Analyser – £500.
HP5316A Universal Counter A+B.
HP5335A Universal Counter A+B+C.
HP8901A Modulation Meter AM-FM – £1.5k.
Marconi TF2374 Zero Loss Probe – £200.
Marconi TF2305 Modulation Meter – £1.5k.
Racal/Dana 2101 Microwave Counter – 10Hz-20GHz – £2k.
Racal/Dana 1250-1261 Universal Switch Controller + 200Mc/s PI Cards.
Racal/Dana 9303 True RMS Levelmeter+Head – £450. IFFE – £500.
TEKA6902A also A6902B Isolator – £300-£400.
TEK FG5010 Programmable Function Generator 20Mc/s – £600.
TEK2465A 350Mc/s Oscilloscope – £2.5k + probes – £150 each.
TEK CT-5 High Current Transformer Probe – £250.
TEK J16 Digital Photometer + J6523-2 Luminance Probe – £300.
HP745A+746A AC Calibrator – £600.
HP54200A Digitizing Oscilloscope – £500.
HP11729C Carrier Noise Test Set .01-18GHz – LEF – £2000.
Marconi TF2008 – AM-FM signal generator – also sweeper – 10Kc/s – 510Mc/s – from £250 – tested to £400 as new with manual – probe kit in wooden carrying box.
HP Frequency comb generator type 8406 – £400.
HP Sweep Oscillators type 8690 A & B + plug-ins from 20Mc/s to 18GHz also 18-40GHz
HP Network Analyzer type 8407A + 8412A + 8501A –100Kc/s – 110Mc/s – £500 – £1000.
HP Amplifier type 8447A – 1-400Mc/s £200 – HP8447A Dual – £300.
HP Frequency Counter type 5340A – 18GHz £1000 – rear output £800.
HP 8410 – A – B – C Network Analyzer 110MC/s to 12GHz or 18GHz – plus most other units and displays used in this set-up – 8411a – 8412 – 8413 – 8414 – 8418 – 8740 – 8741 – 8742 – 8743 – 8746 – 8650. From £1000.
Racal/Dana 9301A-9302 RF Millivoltmeter – 1.5-2GHz – £250-£400.
Racal/Dana Modulation Meter type 9009-9008 – 8Mc/s – 1.5GHz – £150/£250.
Marconi RCL Bridge type TF2700 – £150.
Marconi/Saunders Signal Sources type – 6058B – 6070A – 6055A – 6059A – 6057A – 6056 – £250-£350. 400Mc/s to 18GHz.
Marconi microwave 6600A sweep osc., mainframe with 6650 PI – 18-26.5GHz or 6651 PI – 26.5-40GHz – £750 or PI only £600. MF only £250.
Tektronix Plug-Ins 7A13 –7A14 – 7A18 – 7A24 – 7A26 – 7A11 – 7M11 – 7S11 – 7D10 – 7S12 – S1 – S2 – S6 – S52 – PG506 – SC504 – SG502 – SG503 – SG504 – DC503 – DC508 – DD501 – WR501 – DM501A – FG501A – TG501 – PG502 –DC505A – FG504 – 7B80 + 85 – 7B92A.
Gould J3B test oscillator + manual – £150.
Tektronix Mainframes – 7603 – 7623A – 7613 – 7704A – 7844 – 7904 – TM501 – TM503 – TM506 – 7904A – 7834 – 7623 – 7633 – 7844 – 7854 – 7104.
Marconi 6155A Signal Source – 1 to 2GHz – LED readout – £400.
Barr & Stroud Variable filter EF3 0.1Hz – 100Kc/s + high pass + low pass – £150.
Farnell power unit H60/50 – £400 tested. H60/25 – £250.
Racal/Dana 9300 RMS voltmeter – £250.
HP 8750A storage normalizer – £400 with lead + S.A or N, A Interface.
Tektronix – 7S14 – 7T11 – 7S11 – 7S12 – S1 – S2 – S39 – S47 – S51 – S52 – S53 – 7M11.
Marconi mod meters type TF2304 – £250.
Systron Donner counter type 6054B – 20Mc/s – 24GHz – LED readout – £1k.
Farnell electronic load type RB1030-35 – £350.
Racal/Dana counters – 9904 – 9905 – 9906 – 9915 – 9916 – 9917 – 9921 – 50Mc/s – 3GHz – £100- £450 – all fitted with FX standards.
HP4815A RF vector impedance meter c/w probe – £500-£600.
HP180TR, HP182T mainframes £300-£500.
Marconi 6700A sweep oscillator + 18GHz PI's available.
Racal/Dana VLF frequency standard equipment. Tracer receiver type 900A + difference meter type 527E + rubidium standard type 9475 – £2750.
HP432A – 435A or B – 436A – power meters + powerheads to 60GHz.
HP8614A signal generator 800Mc/s – 2.4GHz, new colour £400.
HP8616A signal gen 1.8GHz-4.5GHz, new colour £400.
HP 3336A or B syn level generator – £500-£600.
HP 3586B or C selective level meter – £750-£1000.
HP 8683D S/G microwave 2.3 – 13GHz – opt 001 – 003 – £2.5k.
HP 8660 D syn S/G. AM + FM + 10Kc/s to 110Mc/s PI – 1Mc/s to 1300Mc/s – 1Mc/s to 2600 – £3.5k.
HP 8640B S/G AM-FM 512Mc/s or 1024Mc/s. Opt 001 or 002 or 003 – £800-£1250.
HP 86222BX Sweep PI – 01 – 2.4GHz + ATT – £1400 – £1750.
HP 86290A Sweep PI – 2 – 18GHz – £1000 – **HP 86290B** £1250
HP 86 Series PI's in stock – splitband from 10Mc/s – 18.6GHz – £250 – £1k.
HP 8620C Mainframe – £250. IEEE – £500.
HP 8615A Programmable signal source – 1MHz – 50Mc/s – opt 002 – £1k.
HP 8601A Sweep generator .1 – 110Mc/s – £300.
HP 853A MF ANZ – £1k.
HP 8349A Microwave Amp 2 – 20GHz Solid state – £1500.
HP 1980B Oscilloscope measurement system – £300.
HP 3455/3456A Digital voltmeter – £400.
HP 5370A Universal time interval counter – £1k.
HP 5335A Universal counter – 200Mc/s – £500.
HP 5328A Universal counter – 500Mc/s – £250.
HP 6034A System power supply – 0 – 60V – 0 – 10 amps – £500.
HP 3717A 70Mc/s modulator – demodulator – £400.
HP 3710A – 3715A – 3716A – 3702B – 3703B – 3705A – 3711A – 3791B – 3712A – 3793B microwave link analyser – P.O.R.
HP 3552A Transmission test set – £350.
HP 3763A Error detector – £500.
HP 3764A Digital transmission analyser – £600.
HP 3770A Amp delay distortion analyser – £400 – + 3770B – £400.
HP 3780A Pattern generator detector – £400.
HP 3781A Pattern generator – £400.
HP 3782A Error detector – £400.
Tektronix 577 Curve tracer + adaptors – £900.
Tektronix 1502/1503 TDR cable test set – £400.
Racal 1991-1992-1998 – 1300Mc/s counters – £400-£900.
Fluke 80K-40 High voltage probe in case – BN – £50-£75.
EIP 545 microwave 18GHz counter – £1200.
Fluke 510A AC ref standard – 400Hz – £200.
Fluke 355A DC voltage standard – £300.
Wiltron 610D Sweep Generator + 6124C PI – 4 – 8GHz – £400.
Wiltron 610D Sweep Generator + 61084D PI – 1Mc/s – 1500Mc/s – £500.
HP 8699B Sweep PI YIG oscillator .01 – 4GHz – £300. 8690B MF – £250. Both £500.
Dummy Loads & power att up to 2.5 kilowatts FX up to 18GHz – microwave parts new and ex equipt – relays – attenuators – switches – waveguides – Yigs – SMA – APC7 plugs – adaptors.
B&K Items in stock – ask for list.
W&G Items in stock – ask for list.
Power Supplies Heavy duty + bench in stock – Farnell – HP – Weir – Thurlby – Racal etc. Ask for list. Large quantity in stock, all types.
Marconi 2955 Radio test set + calibration. £2000.
Marconi 2955 + 2958 Tacs radio test set + calibration. £2250.
Marconi TF2015 S/G 10Mc/s-520Mc/s AM.FM. £150.
Marconi TF2016A S/G 10Kc/s-120Mc/s. AM.FM. £150.
Marconi TF2171 or 2173 Digital syncronizer for 2015/2016. £100.
Marconi TF2017 S/G .01-1024Mc/s.AM.FM. High grade. £1500.
Marconi TF2018 S/G 80Kc/s-520Mc/s. AM. FM. £800.
Marconi TF2018A S/G 80Kc/s-520Mc/s. AM. FM. £1000.
Marconi TF2019 S/G 80Kc/s-1040Mc/s. AM. FM. £1250.
Marconi TF2019A S/G 80Kc/s-1040Mc/s. AM. FM. £1500.
Marconi TF2022E S/G 10Kc/s-1.01GHzs. AM. FM. £1500.
Marconi TF2022E As above but as new + Cal cert. £1800.
Marconi TF6311 Microwave Sweep S/G 10Mc/s-20GHz c/w TF6500 amplitude Anz. plus heads 10Kc/s-40GHz. £4K-£5K.
Farnell S/G ESG1000 10Hz-1000Mc/s. AM. FM. £1200.
Farnell S/G PSG1000 10Hz-1000Mc/s. AM. FM. £1300.
IFR 1200S Communications radio test set. £2500.
TF2370 Spectrum Anz's 30Hz-110Mc/s. Large qty in stock to clear as received from Gov-all sold as is from pile complete or add £100 for testing.
Callers preferred – Pick your own from over sixty units.
A. Early Model – Grey – Rear horizontal alloy cooling fins – £200.
B. Late Model – Grey – Vertical alloy cooling fins – £300.
C. Late Model – Brown – Vertical alloy cooling fins – £500.
Marconi TK2373 Extender to 1.25GHz-£400. Brown colour – £500.
H.P. 3325A Synthesized function generator – £1000-£1500.
H.P. 3325B Synthesized function generator – £2500.
H.P. 8505A Vector voltmeter – late colour – £400.
H.P. 8508A Vector voltmeter – £2500.
H.P. 8505A Network Anz 500KHz-1.3GHz – £1750.
H.P. 8505A + 8502A or 8503A test sets – £2000/£2250.
H.P. 8505A + 8502A or 8503A+8501A normalizer – £2500.
H.P. 8557A .01Mc/s-350Mc/s-**8558B** 0.1-1500Mc/s - **8559A** .01-21GHz + **MF853A** or 182T or 180C-D-T £500-£3000.
Tektronix 492 Spectrum Anz-OPT 3-50Kc/s-21GHz – £3500.
Tektronix - HP Oscilloscopes – 100Mc/s-465-465B-1740-1741 etc – £300.
Phillips 3217 50Mc/s oscilloscopes – £250.
Phillips 3296 350Mc/s IR remote control oscilloscope – £1400.
Hitachi VC6041 Digital storage oscilloscope – 100Mc/s – £800.
Tektronix 2430A Digital storage oscilloscope – 100Mc/s – £2000.
Tektronix 2440 Digital storage oscilloscope – 400Mc/s – £2400.
Tektronix 2245A Oscilloscope – 100Mc/s – £1000.
Tektronix 2445 + DMM – 250Mc/s – £1750.
Tektronix 2445A – 150Mc/s – 4 CH – £1500.
Schaffner NSG 200E Mainframe – NSG203A low volt var simulator – NSG222A. Interface simulator – NSG223 Interface generator – NSG224 Interface simulator – NSG226 Data line simulator – all six items at £1500.
Schaffner NSG200E Mainframe – NSG203E low volt var simulator – NSG222A Interface simulator – all three items – £1000.

ITEMS BOUGHT FROM HM GOVERNMENT BEING SURPLUS. PRICE IS EX WORKS. SAE FOR ENQUIRIES. PHONE FOR APPOINTMENT OR FOR DEMONSTRATION OF ANY ITEMS, AVAILABILITY OR PRICE CHANGE. VAT AND CARRIAGE EXTRA. ITEMS MARKED TESTED HAVE 30 DAY WARRANTY. WANTED: TEST EQUIPMENT-VALVES-PLUGS AND SOCKETS-SYNCROS-TRANSMITTING AND RECEIVING EQUIPMENT ETC.

Johns Radio, Whitehall Works, 84 Whitehall Road East, Birkenshaw, Bradford BD11 2ER. Tel. No: (01274) 684007. Fax: 651160

CIRCLE NO. 132 ON REPLY CARD

Sensing temperature

In this second article on measuring and comparing temperature, Richard Lines looks at which transducer is best for which job, and discusses interfacing issues.

My previous article looked at the general principles involved in temperature measurement and reviewed the type of results that are easily achievable. This article consider types of sensor and their interface circuits.

When selecting a sensor, several different parameters need to be considered. These are some of the most important;

- operating temperature range
- linearity
- calibration accuracy
- sensitivity
- physical size
- cost
- thermal time constant
- circuit complexity
- long-term stability
- heat leakage through sensor connections

Whether the sensor is used in a 2, 3, or 4 wire configuration needs to be taken into account when considering circuit complexity.

With these points in mind, some of the available options will now be reviewed. Some interface circuits will be shown with the intention of raising the output of all types of sensor to a common level of 10mV/ºC to afford compatibility with a controller that I will describe later.

Platinum resistance sensors

These sensors rely on the positive temperature coefficient of resistance inherent in platinum metal. Most commercial components adhere to the Pt100 standard, where the resistance is fixed to be 100Ω at 0ºC and increases by 0.385Ω/ºC. Thus the resistance at any temperature can be calculated from, $R(t)=100+0.385t$, where t is the temperature in celsius and R the resistance in ohms.

The sensor operates over a wide range from –50ºC to 500ºC but the equation only holds over a limited range of approximately –50ºC to 200ºC. Within these limits the error is less than 1ºC for a measured resistance. Above 200ºC the resistance is less than predicted until at 500ºC the error has risen to 30ºC. This is illustrated graphically in **Fig. 1**.

For situations requiring greater accuracy over the whole temperature range, the tabular data quoted in the RS data sheet 3914 has been fitted to a second-order polynomial and the following equation obtained;

$$R(t)=99.9998+0.3908t-0.000058t^2$$

again with R in ohms and t in ºC.

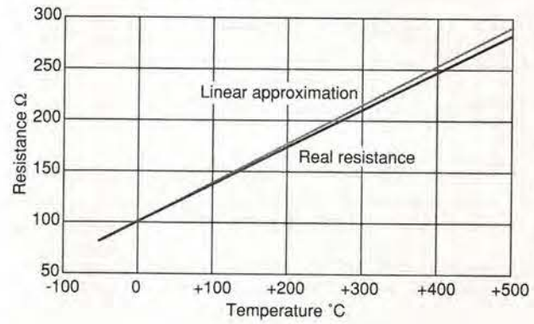

Fig. 1. Platinum resistance thermometers exhibit good linearity over a wide range of temperatures.

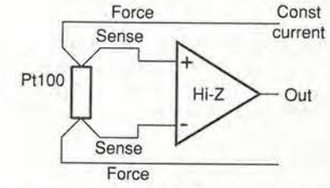

Fig. 2. Four-wire connection of a platinum resistance sensor avoids the problem of voltage drop over the connection wires but adds the penalty of needing more expensive cable. The voltage drop is transferred to the wires carrying the constant current.

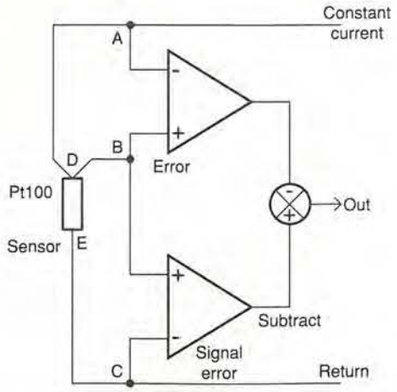

Fig. 3. Three-wire connection of a platinum sensor involves an error amplifier to determine the voltage drop in one leg of the current-carrying wires. Error voltage is then subtracted from the reading.

A bigger problem with platinum sensors is that the resistance is fairly low. This means that precautions have to be taken to ensure that the resistance in the connecting wires does not introduce errors. A resistance of just 1Ω in the wiring produces an error of almost 3°C – and such a resistance is not an unreasonable value for long runs of thin wire.

Four-wire sensing

It would be much more convenient if the calibration could be made completely independent of the length of the connecting wires to the sensor. The best technique is to use a four-wire connection to the sensor, **Fig. 2**.

Each end of the sensor is directly connected to a force wire and a sense wire. A constant current is passed through the sensor using the force wires. The voltage developed over the sensor is sampled with a high impedance amplifier connected via the sense wires.

Because of the high impedance at the amplifier inputs, there is no current in the sense wires and thus no error due to cable resistance. There is a voltage drop in the force wires, but this is not seen by the amplifier. This is the most accurate form of connection and all four wires can have different resistances. Four-core cable is a little unusual and liable to be relatively expensive though.

One wire can be saved by going to the three-wire connection, **Fig. 3**. The three wires are connected to terminals A, B,and C. The constant current flows out of A entering the sensor at D. It leaves the sensor at E and returns to the current generator via the circuit ground at C.

Both amplifiers present a high impedance at B, so no current flows in the sense wire DB. Thus the top amplifier sees the error voltage due to the resistance in the force wire AD. The bottom amplifier sees the wanted sensor voltage plus the unwanted error voltage in force wire EC.

Assuming the force wires AD and EC have the same resistance then the true sensor voltage can be found by subtracting the error amplifier output from that of the main amplifier. In practice gains higher than x1 would be used to give an appropriate scale factor at the output, but the two amplifiers need to have the same gain.

The arrangement works very well in practice and is commonly used on commercial controllers, including the *CAL 9900* described last month. The restriction that the force wires should be matched is adequately met with multi-core cable; a more likely error is an intermittent high resistance pin on one of the plugs and sockets. It is worth the extra expense of purchasing plugs and sockets with gold plated contacts. The better quality nine-way 'D' connectors are fine.

The sensitivity of the platinum resistance sensor depends on the current used. There is a trade-off here between sensitivity and self-heating of the sensor. To reduce calibration errors due to self heating, many commercial controllers keep the sensor current between 100µA and 1mA.

Taking the 1mA figure, this implies a sensor output of 385µV/°C. This is not very much if you are looking for control at the 10mK level, bearing in mind that 10mK translates to less than 4µV. It may be necessary to use some of the newer chopping amplifiers like the *LTC1050* and *TSC911* to stop drift of the set point in the controller electronics.

If the sensor is large enough then self-heating will not be a problem. In this case, the sensor current can be usefully increased, to 10mA for example, providing more output and relaxing the requirements on the rest of the electronics. At this current the power dropped in the sensor is of the order of 10mW, which will produce a substantial calibration error in small sensors. As ever , it is a matter of choosing the compromise to suit the situation.

The initial calibration accuracy of platinum sensors is quite good. The ones stocked by RS Components are quoted to be 100 ±0.1Ω at 0°C, which is within 0.3°C. This is a gain error, since the temperature-to-resistance characteristic depends only on the initial resistance and the accurately known temperature coefficient for platinum.

Of course the accuracy and drift can never be better than the constant current generator used and some effort needs to be taken to ensure it does not drift with temperature. The same goes for the following amplifier. A suitable three-wire interface circuit is now described.

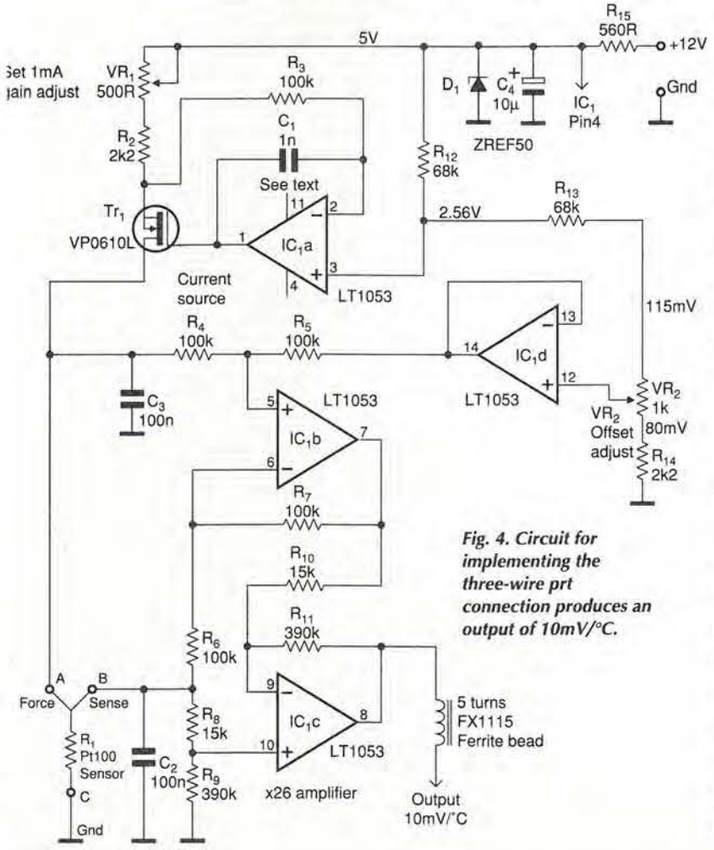

Fig. 4. Circuit for implementing the three-wire prt connection produces an output of 10mV/°C.

Three-wire Pt100 interface

This three-wire interface circuit is based on a quad chopping amplifier type *LTC1053* from Linear Technology, **Fig. 4**. The device has internal sample-and-hold capacitors and can be used much like a normal op-amp. The offset voltage drift is quoted as 0.05µV/°C, which is much better than normal precision op-amps can do.

Together with T_1, op-amp IC_{1a} makes a precision current source producing 1mA through the sensor. Section IC_{1c} amplifies the sensor voltage to 10mV/°C. Cable error correction measurement is done by IC_{1b} and the subtraction is done by using the output of this op-amp as a moving reference for the inverting input to IC_{1c}.

An offset is introduced by VR_2 and IC_{1d} to enable the output to be set on 0V for 0°C. The resistors need to be close tolerance types – 1% or better – and D_1 needs to be the *ZREF50* as specified.

All currents and offset voltages are derived from the local 5V supply. Diode D_1 has a quoted temperature coefficient of 15ppm and a dynamic impedance of 0.4Ω. A standard 5.6V zener is likely to introduce drifts.

Potentiometers VR_1 and VR_2 need to be ten-turn types to avoid the adjustments being tricky and temperamental. The inductor in the output lead is to enable the circuit to drive a long cable without the cable capacity causing instability; it may be removed for short runs.

If the circuit can be made small enough and operation at a fixed temperature is anticipated, then it may be possible to enclose it within the temperature controlled environment and cheaper components can be used.

Where operation is only required above about 5°C, a negative supply rail is not needed since both inputs and outputs for this IC can operate to the negative rail. Alternatively, a negative supply between –1 and –10V must be provided. The stability of this rail is not critical.

The circuit operates over the sensor range –50°C to +400°C but there is no linearity correction at higher temperatures. It is worthwhile constructing the circuit so that there are no great thermal gradients which will introduce local thermocouples in the wiring thus degrading performance.

Setting up the design

To set up, disconnect the sensor and adjust the current between the force and ground terminals to be 1000 ±1µA. Then substitute the sensor with a 100Ω, 0.1% resistor and set the offset so the output is 0.000V. Connecting the sensor will now give the correct output.

I dislike trimmer potentiometer adjustments; if the circuit is made with 0.1% resistors then VR_1 can be replaced with a 240Ω resistor while retaining sufficient accuracy for many applications. The circuit will retain an accuracy to typically 1%. Most of the errors are then result from the voltage tolerance of $D1$, and the unmatched resistance in the sensor connections.

If you need to operate below 0°C with a single supply then IC_{1d} can be omitted and the free end of R_5 grounded. The output is now centred on 2.6V at 0°C with the same scale factor.

Small adjustments of the sensor current can be used to compensate for gain errors, but each time an adjustment is made the offset control will need to be reset.

Thermocouple characteristics

These widely available sensors come in several types, enabling a very wide temperature range to be covered from –250°C to 1300°C. For many high-temperature applications they are the only viable form of contact sensor.

Other advantages of thermocouples include robustness and small size. Their main drawback is the very low output available.

A thermocouple probe consists of two wires made from different metals welded together at a point. The principle of operation was discovered by Seebeck in 1821 and now carries his name.

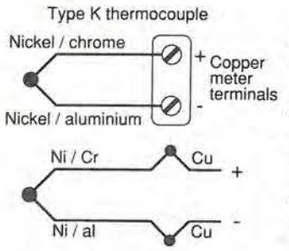

Fig. 5. When connecting a thermocouple, all junctions that involve any metal coming into contact with any other metal need to be taken into account.

The two different metals comprising
the junction have different electron densities, where the electron density is the number of free electrons in the conduction band per unit volume. These electrons can be considered as exerting a gas pressure within the metal.

When the metals are joined at the weld, there will be a transfer of electrons from the metal with the larger electron pressure to the metal with the smaller. As a consequence the donating metal will pick up a positive charge and the recipient a negative one.

Thus a balance will be set up where further electron transfer is stopped by the potential difference between the metals. This balance point is temperature dependent; as the temperature increases, the electron pressure increases too, so the balance will shift towards a greater potential difference to counteract the increased pressure.

Given a junction size greater than the mean free path of the electrons then the above explanation of the Seebeck effect would suggest that it is possible to build a sensor which will give a repeatable absolute output with respect to temperature since the sensor properties will depend only on the properties of the two metals.

In practice though, all thermocouple systems use a differential setup involving a technique called 'cold junction compensation'. Many books gloss over this compensation as something too obvious to explain in detail. Since I found the reasons for cold junction compensation anything but obvious, it is probably worth an extra paragraph spelling it out in some detail – especially as the explanation illustrates some of the practical problems with using thermocouples.

Figure 5 shows a single type-K thermocouple connected to a sensitive voltmeter. This particular design uses a type-K thermocouple with the positive wire made from nickel-chromium alloy and the negative wire from nickel-aluminium.

The voltmeter terminals are assumed to be made of the same metal, taken as copper for this example. The terminals could just as well be the input pins on an IC. The metal type used for the terminals does not matter provided both terminals are the same.

The point is that simply connecting up the thermocouple to the voltmeter has generated two more unwanted thermocouples on the meter terminals, both of which are nominally at room temperature. The circuit can be represented as follows:

Cu●NiCr	NiCr●NiAl	NiAl●Cu
terminal+	thermocouple	terminal–

Thus the voltmeter actually measures the algebraic sum of three voltages, only one of which is generated by the temperature of interest. The unwanted thermocouples at the terminals are in effect back-to-back:

NiCr●Cu	Cu●NiAl
terminal+	terminal–

and, provided they really are at the same temperature, behave

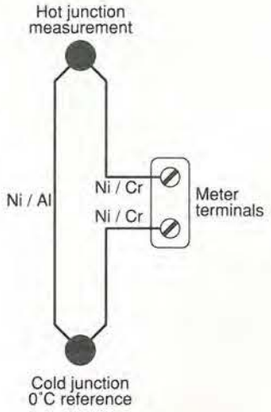

Fig. 6. Using a thermocouple involves the use of a cold junction to derive a compensation signal.

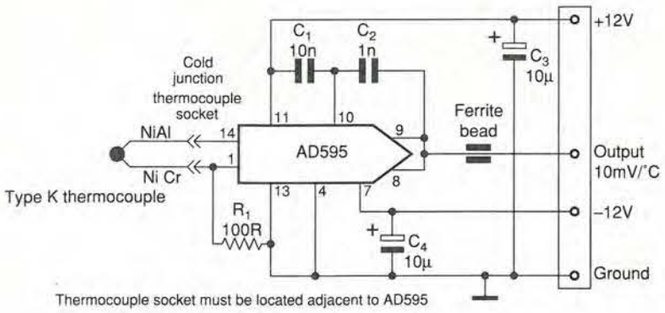

Fig. 7. The easiest way to interface a thermocouple is via a special-purpose amplifier IC, an example of which is Analog Devices' AD595. This circuit is for a type K thermocouple.

like a single NiCr-NiAl thermocouple at room temperature.

By the way, introducing a third metal in the middle does not affect the operation of the two outer metals as a thermocouple; hence thermocouples can be silver soldered rather than welded.

The circuit can be redrawn as two thermocouples;

```
++ —NiCr●NiAl———NiAl●NiCr— --
   thermocouple    terminals
```

The end result is that we are reduced to having to make a differential measurement between the wanted temperature and ambient.

This problem is usually solved in textbooks by introducing a second thermocouple as shown in **Fig. 6**. In this arrangement there are two thermocouples wired up back-to-back. One is kept at 0°C in an ice-water mix and the other is used as the sensor.

There are still two unwanted thermocouples on the meter terminals but note that each terminal is connected to the same type of wire, which is usually nickel-chrome. Thus the spurious thermal emf generated on each terminal will cancel out on the other terminal. As a result, the indicated temperature no longer depends on the ambient temperature, but only on the difference between the sensor and reference thermocouples.

In view of the practical problems of providing ice baths, the normal electronic solution is to use a single thermocouple connected in series with a voltage source. This source varies with ambient temperature in such a way as to remove the effects of the unwanted thermocouple at the terminals.

There are special integrated circuits available, designed for thermocouple compensation. Two good examples are the *AD594/5* from Analog Devices and the *LT1025* by Linear Technology. The *AD594* is intended for a type J thermocouple and the *AD595* for type K. Each provides both compensation and amplification to provide an output scale factor of 10 mV/°C. A suitable circuit is shown in **Fig. 7**.

Applying thermocouples

The output of all types of thermocouple is very low. The type K used in the examples provides only 40µV/°C. Some other types provide even less. This places great demands on the stability of signal conditioning circuitry regarding op-amp offset drifts.

To achieve long-term stability to better than 0.1°C really demands the use of chopper stabilised amplifiers and close tolerance resistors.

Every electrical connection between the thermocouple and the control circuitry must be treated as a potential thermocouple and a source of drift. This includes cables, connectors, pcb tracks and soldered joints.

There are special connectors and cables available, and stocked by RS, for each type of thermocouple. Using these minimises drift problems. Their use is recommended since they are made from matching alloys especially to solve this problem.

Should it not be practicable to use the proper connection fittings, it is possible to get away with normal connectors. But if you do, you must use exactly the same configuration and parts in both legs of the thermocouple circuit and make sure that there are no temperature gradients across the connections.

The thermocouple wires should be kept twisted together and connecting blocks kept away from heat sources. Circuit boards should be designed so that the two thermocouple connections are routed on closely spaced tracks away from hot components.

Whatever system of cold junction compensation is used – i.e. a dedicated chip or discrete components – the compensation system must be very closely coupled to the cold junction. For this reason it is not possible to extend a short thermocouple with two copper wires. If you do, the cold junction is then moved away from the compensation circuit and will not be at the same temperature.

For example the *AD595* application notes suggest soldering the thermocouple wires directly to the chip pin pads. In the past, I have made up the *AD595* circuit 'bird's nest' fashion and potted the circuit in a short length of copper tube to ensure that the cold junction compensation works correctly.

Standard thermocouples do not solder with the usual flux-cored electronic solder. I have had some success with aluminium solder but screw connections always seem to give the most consistent results.

It is probably unrealistic to expect really good temperature stability in control systems using thermocouples. Their use is best reserved for situations where no other sensor will work. To get results reliable to 0.1°C is something of an achievement.

Thermistor characteristics

Thermistors are two-terminal semiconductor sensors whose resistance changes as a function of temperature. They are available with both positive and negative temperature coefficients. These two options are commonly abbreviated to ptc and ntc thermistors respectively.

There seems to be a much greater choice with negative temperature coefficients versions. These rely on electrons being promoted thermally from the valence to the conductance band; hence the resistance drops with temperature. There is a vast range of devices available covering a wide range of temperatures, applications and physical size.

Types intended for bias point stabilisation or correction of deflection coil resistance on crts may show ageing problems at the accuracy we are striving for and are probably best avoided. The best ones for temperature regulation are the small glass bead units with guaranteed reproducible characteristics. These enable replacement with minimal loss of calibration accuracy.

In my experience, it is always possible to find a device that will have a resistance of at least several thousand ohms at the temperature of interest; this means that the resistance of the connecting leads can be ignored – unlike the platinum sensor previously described.

Other thermistor advantages are small size, reasonable price, high sensitivity, two-wire reversible connections and rapid response. The main drawback is the exponential response, which causes calibration problems and huge changes in sensitivity if the sensor is expected to be used over a large temperature range.

Figure 8 shows the resistance of a typical ntc thermistor made by Siemens and designated *CR05F* by Maplin. The curve is plotted with a logarithmic resistance axis.

Resistance of a thermistor at a given temperature *R(t)* is given by the equation;

$$R(t) = R(t_0)\exp\left(\frac{B}{t} - \frac{B}{t_0}\right)$$

where *R(t0)* is the resistance at a standard temperature (t_0) and B is a constant for the device.

For the example device, *R(t0)* is 10kΩ at *t0*=298K and B=4560K. All temperatures in this formula are in kelvin.

Thermistor bridge

Figure 9 shows the thermistor connected as part of a standard Wheatstone bridge arrangement with the set-point control for 0 to 100°C done with VR_1. The usual advantages of Wheatstone bridges apply, with the balance point being independent of the activation voltage. Calibration depends only on a few precision resistors.

In many cases it will be possible to locate the actual bridge circuitry within the stabilised enclosure thus eliminating set point drifts. Only four wires are needed to connect the bridge to the outside world.

The resulting calibration for degrees celsius *versus* percentage of knob rotation is illustrated in **Fig. 10**, and is seen to be grossly non-linear with most of the temperature range compressed into the last 20% of knob rotation.

There are other bridge configurations which will produce a more linear response, but I have not so far come up with an arrangement to produce our standard 10 mV/°C output. For this reason, I will not consider them further here.

If it is known that the required set point range is fairly small then the nonlinearity is less of a problem. Under these circumstances thermistors make really good sensors.

Diode and transistor alternatives

A forward-biased silicon diode, or bipolar transistor with base-collector shorted, exhibits a drop of about 0.4 to 0.8V depending on temperature and current.

The voltage drop falls in an approximately linear fashion at a rate of about 2.1mV/°C, making the diode quite a useful sensor. Since the devices are not intended for use this way, individual calibration will be required. The useful range is limited to that quoted for normal applications, which is typically –50 to +150°C.

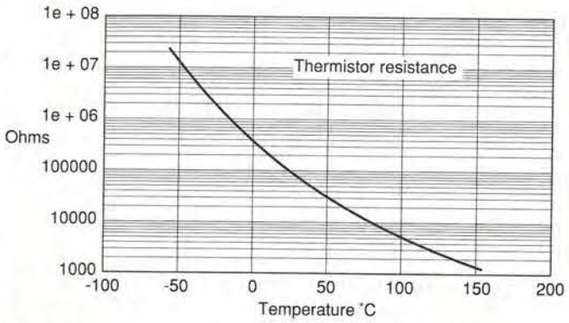

Fig. 8. Resistance curve of a typical negative-coefficient thermistor indicates an exponential response.

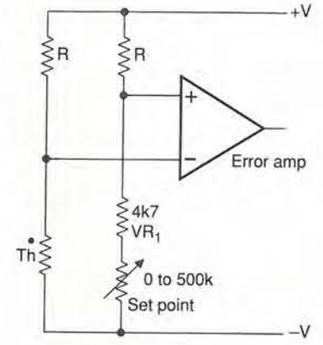

Fig. 9. In this interface, a thermistor forms one arm of a Wheatstone bridge.

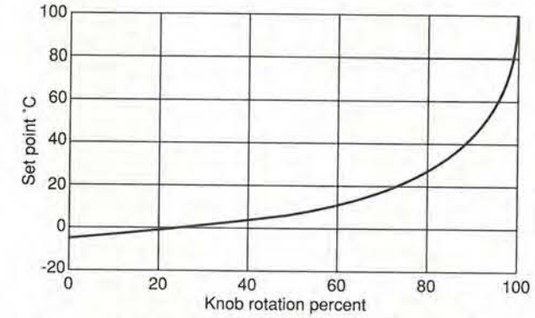

Fig. 10. Using a thermistor in a Wheatstone Bridge configuration has its advantages, but linearity of the scale for the knob used to balance the bridge is not one of them.

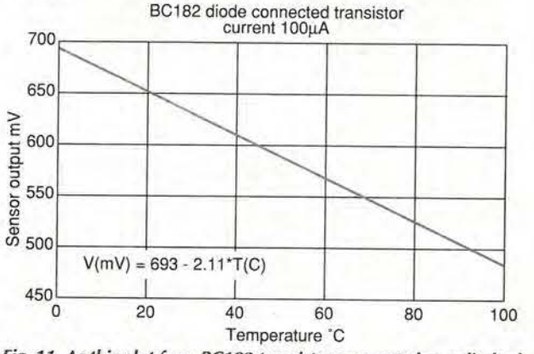

Fig. 11. As this plot for a BC182 transistor connected as a diode shows, semiconductors make useful linear temperature sensors, but over a limited range.

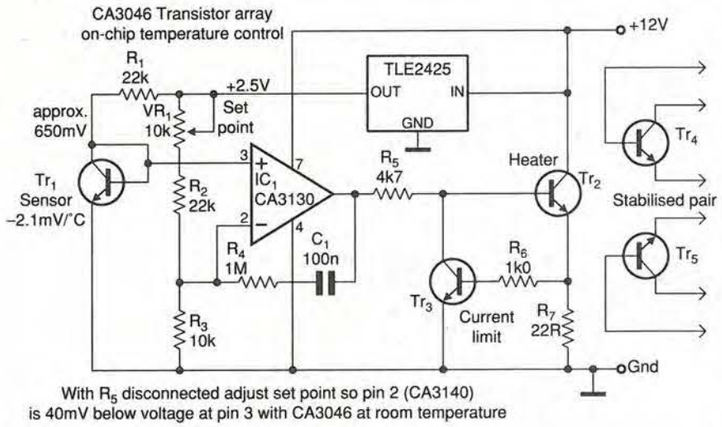

Fig. 12. In some applications, it is desirable to keep a transistor junction at a fixed, stable temperature. Using a CA3046 transistor array ensures that the transistor being used as a heater and the transistor that forms the temperature sensor are in intimate contact. This configuration keeps the junction temperature within 0.01°C over a 10°C change in ambient temperature.

Stud mounting diodes and small power transistors are easily bolted down to flat surfaces and make very cheap and convenient sensors where size is not a problem. Don't forget though that the metal cases are not usually galvanically isolated.

Figure 11 shows the calibration curve for a *BC182* diode-connected transistor. The response is seen to be linear with a slope of –2.11mV/°C. Transistor current was kept at 100µA; for other currents the slope will be the same but the graph will move up or down logarithmically at a rate of 60mV per factor of 10 change.

There are more subtle ways to use transistors as sensors. In applications using logarithmic amplifiers, the log function is usually produced using a bipolar transistor in the feedback loop of an op-amp. The Ebers-Moll equation defines the collector current as an exponential function of base-emitter voltage, and there will be both gain and offset drifts if the transistor's temperature is allowed to change.

A clever solution I have seen in several sources is to use a transistor array of the *CA3046* variety. Of the five transistors in the array, one is used as the temperature sensor, another as the heating element and the remaining three are available for applications requiring stability; i.e. the log transistor or a stabilised matched pair.

A typical circuit is shown in **Fig. 12**. This is the best example I know of for ensuring that the sensor and heater are in intimate thermal contact. It is easy to control the array to 0.01°C for an ambient change of 10°C. Warm-up time is very fast too, at less than a second.

There is an alternative approach to using diodes as sensors; the differential resistance under forward bias is given by the well known equation,

$$R(diff) = \frac{kT}{qI}$$

where k is Boltzmann's constant, T the absolute temperature in kelvin, q the electron charge and I the diode current.

None of these terms relates to the physical characteristics of the p-n junction. In theory the sensor transistor or diode can be replaced without changing the calibration. An excellent sensor interface based on this principle is described by H. Kuhne in *Elektor*, September 1993.

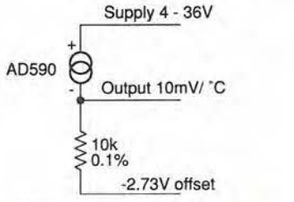

Fig. 13. Connection of the AD590 temperature sensor is very simple, needing only one resistor to produce a 10mV/°C output.

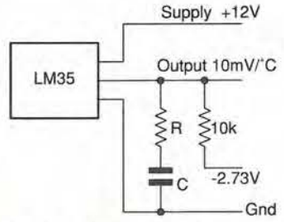

Fig. 14. Cable capacitance can cause the LM35 to become unstable. Adding a resistor to the IC output stops this, but the arrangement shown is better.

Integrated circuit sensors

Last but not least we come to a rather mixed bag of IC sensors. These come with various output formats and are best discussed on an individual basis;

AD590. Produced by Analog Devices and Philips, this useful sensor is a two-wire type in a metal TO18 can, which is isolated from the chip. It produces a current output of 1µA/kelvin.

The current output means that the sensor cable resistance can be ignored. The metal can fits tightly into a 4.7mm hole. Alternatively I have found that the unit can be soldered into place by the can without destroying it. The range is –55 to +150°C and the offset error 3°C maximum, although in practice all the units I have used have been within a degree at room temperature.

The current output is easily converted to 10mV/°C with a precision 10kΩ resistor: this is the arrangement used in the final controller design to be published in my next article. The principle is shown above in **Fig. 13**.

Since the chip inside the *AD590* is bonded to the metal case and connected to the pins via very fine gold wires, it suffers less from heat leaks down the connecting wires than some other types of IC sensor. For very accurate control this may be a worthwhile advantage.

All things considered this is an excellent sensor, albeit slightly expensive at £8 to £10. It does not suffer from high frequency oscillation problems.

LM35, LM45. Made by National Semiconductor, these three-wire sensors are housed in a plastic or metal case. The output is a very convenient 10 mV/°C from a low impedance source.

The *LM35* comes in two grades, The *LM35C* covers –40 to +110 °C with a maximum error of 0.4°C while the cheaper *LM35D* and *LM45* cover 0 to 100°C with maximum errors of 0.9 and 3.0°C respectively.

There is also an *LM34* available calibrated for fahrenheit measurements. These sensors are quite cheap.. The *LM35C* and *LM35D* cost about £5 and £3 respectively in one-off quantities.

The *LM35* comes in a steel TO46 can or plastic TO92 case and the *LM45* in a tiny surface mount package which makes it one of the smallest sensors available. But this makes it is quite a challenge to solder on three wires.

There are a few practical points worth noting. If operation is required only above about 4°C with short connecting leads then no extra components are needed. At lower temperatures, the output terminal has to be returned to a negative supply via a pull-down resistor. The value of the resistor is not too important as the output impedance of the sensor is very low; NS suggests a tail current of the order of 50µA.

In **Fig. 14**, I have shown the output returned to –2.73V via a 10kΩ, 0.1% resistor. Neither value is critical for operation of the *LM35*, but using them allows an input circuit that accommodates both the *LM35* and the *AD590* without modification. This is a useful feature on a general purpose controller.

If the sensor is presented with a long cable, the extra capacitance, if greater than 50pF, can cause high frequency oscillations. These oscillations may not be noticed at first since the average dc level from the sensor is approximately correct. The real problem is that oscillation can start and stop in an apparently random fashion and each time a small change is seen in the reading.

National recommends fitting a resistor in series with the output terminal at the sensor to isolate the cable capacity. This is undoubtedly the most effective solution but can make the sensor assembly bulky and awkward to replace. It also raises the source impedance.

As an alternative, I have found that terminating the sensor cable at the controller end with a series *RC* network solves the problem. The idea is that most twisted pair/triple cables behave like transmission lines of a few hundred ohms impedance, much like telephone lines. Termination with a resistance removes the effect of the cable capacity. A 560Ω resistor in series with 0.1µF works reliably.

The capacitor stops dc current causing self heating of the sensor. It is also possible to use the termination components as a low-pass filter to stop induced pickup on the sensor wires interfering with the controller operation.

The final issue relates to thermal performance; the three leads form a heat leak into the sensor and may cause calibration errors. The wires should be thin. If possible, run the connecting wires along the surface of the item being controlled. This problem is much worse with the plastic-cased device; the heat leak down the leads is greater while at the same time the thermal conductivity from the silicon die to the case is lower.

This short review is far from exhaustive and a rummage through distributors' catalogues will reveal temperature sensitive chips with various weird and wonderful facilities; some have built-in op-amps and Schmitt triggers – such as the *LM3911* and *TMP01* – and one – the Dallas *DS1620* – has an analogue-to-digital converter with serial interface.

My next article deals with thermoelectric Peltier coolers and describes a general purpose analogue temperature controller. ■

LANGREX SUPPLIES LTD

PHONE 0181 684 1166 — DISTRIBUTORS OF ELECTRONIC VALVES TUBES AND SEMICONDUCTORS AND I.C.S. — FAX 0181 684 3056

1 MAYO ROAD ● CROYDON ● SURREY CR0 2QP

24 HOUR EXPRESS MAIL ORDER SERVICE ON STOCK ITEMS

	£ p						
AZ31	6.00	KT66 China	10.00	5Z4GT	3.00	6V6G	8.00
CL33	10.00	KT88 China	12.00	6AQ5	2.00	6V6GT	5.00
E88CC	8.50	N78	8.00	6AR5	20.00	6X4	3.00
E180F	3.50	OA2	3.00	6AS7G	7.50	6X5GT	3.00
E810F	20.00	OB2	3.00	6AU5GT	4.00	12AT7	3.00
EABC80	2.00	OC3	3.00	6AU6	2.00	12AU7	3.50
EB91	1.50	OD3	3.00	6AW8A	4.00	12AX7	5.00
EBF80	1.50	PCF80	2.00	6B4G	22.00	12AX7A	7.50
EBF89	1.50	PCL82	2.00	6BA6	1.50	12AX7W	6.00
EBL31	15.00	PCL85/805	2.50	6BE6	1.50	12BA6	2.00
ECC33	12.00	PCL86	2.50	6BH6	2.00	12BE6	2.00
ECC35	12.00	PD500	6.00	6BQ7A	2.00	12BH7/1	10.00
ECC81	3.00	PL36	3.00	6BR7	4.00	12BY7A	7.00
ECC82	3.50	PL81	2.00	6BR8	4.00	12DW7	15.00
ECC83	5.00	PL504	3.00	6BW6	4.00	12E1	10.00
ECC85	3.50	PL508	3.00	6BW7	3.00	13E1	85.00
ECC88	6.00	PL509/519	10.00	6BZ6	3.00	572B	85.00
ECC808	15.00	PL802	4.00	6C4	2.00	805	45.00
ECF80	1.50	PY500A	3.00	6CB6A	3.00	807	7.50
ECH35	3.50	PY800/801	1.50	6CD6G	5.00	811A	25.00
ECH42	3.50	QQV02-6	12.00	6CL6	3.00	812A	55.00
ECH81	3.00	QQV03-10	5.00	6CG7	7.50	813	27.50
ECL82	3.50	QQV03-20A	10.00	6CH6	3.00	833A	85.00
ECL86	3.50	QQV06-40A	12.00	6CW4	6.00	866A	20.00
ECLL800	25.00	U19	8.00	6DQ5	17.50	872A	30.00
EF37A	3.50	UABC80	1.50	6DQ6B	10.00	931A	25.00
EF39	2.75	UCH42	5.50	6FE6	6.00	2050A	12.50
EF40	4.00	UCL82	2.00	6FQ7	7.50	5751	6.00
EF86	10.00	UCL83	2.00	6GK6	4.00	5763	6.00
EF91	2.00	UF89	4.00	6J5G	6.00	5814A	5.00
EF183/4	2.00	UL41	12.00	6J5M	4.00	5842	12.00
EL33	15.00	UL84	3.00	6J7	3.00	6072A	6.00
EL34	8.00	UY41	4.00	6JB6A	27.50	6080	6.00
EL34G	6.00	UY85	2.00	6JE6C	27.50	6146B	15.00
EL36	5.00	VR105/30	3.00	6JS6C	27.50	6201	8.50
EL41	3.50	VR150/30	3.00	6K6GT	4.00	6336A	35.00
EL84	2.25	Z759	10.00	6L6G	15.00	6550A	25.00
EL95	2.00	Z803U	15.00	6L6GC	15.00	6883B	15.00
EL360	15.00	2D21	3.50	6L6WGB	10.00	7025	7.50
EL509/519	12.00	3B28	12.00	6Q7	3.00	7027A	25.00
EM34	15.00	4CX250B	45.00	6SA7	3.00	7199	15.00
EM81/4/7	4.00	5R4GY	7.50	6SC7	3.00	7360	25.00
EN91	7.50	5U4G	10.00	6SG7	3.00	7581A	15.00
EZ80/81	3.50	5U4GB	10.00	6SJ7	3.00	7586	15.00
GZ32	8.50	5V4G	4.00	6SK7	3.00	7587	20.00
GZ33/37	6.00	5Y3GT	2.50	6SL7GT	5.00		
KT61	15.00	5Z3	5.00	6SN7GT	5.00	*Prices correct when going to press.*	
		5Z4G	6.00	6U8A	1.50		

OPEN TO CALLERS MON-FRI 9AM-4PM. CLOSED SATURDAY

This is a selection from our stock of over 6000 types. Please enquire for types not listed. Obsolete items are our speciality. Valves are new mainly original British or American brands. Terms CWO/min order £10 for credit cards.

P&P 1-3 valves £2.00. 4-6 valves £3.00

Add 17.5% VAT to total including P&P.

VISA MasterCard

CIRCLE NO. 133 ON REPLY CARD

New Special Offers

Mini waterproof TV camera 40x40x15mm requires 9 to 13 volts at 120mA with composite video output (to feed into a video or a TV with a SCART plug) it has a high resolution of 450 TV lines Vertical and 380 TV lines horizontal, electronic auto Iris for nearly dark (1 LUX) to bright sunlight operation and a small lens with a 92 degree field of view, it focuses down to a few CM. It is fitted with a 3 wire lead (12v in gnd and video out). Now also available with wall mount tilt and swivel case (at the same price) ..... £92.57 + VAT = £109.95 ..... or 10+ £89.32 + VAT = £104.95

Board cameras all with 512 x 582 pixels 4.4 x 3.3mm sensor 9-13 volts power supply and composite video out. All need to be housed in your own enclosure and have fragile exposed surface mount parts. 47MIR size 60 x 36 x 27mm with 6 infra red leds (gives the same illumination as a small torch would) ..... £50.00 + VAT = £58.75

40MP size 39 x 38 x 23mm spy camera with a fixed focus pin hole lens for hiding behind a very small hole ..£57.00 + VAT = £66.98
40MC size 39 x 38 x 28mm camera for 'C' mount lens this gives a much clearer picture than with the small lenses ..... £68.78 + VAT = £80.83
Standard 'C' mount lens F1.6 16mm for 40MC ..... £26.43 + VAT = £31.06

High quality stepping motor kits (all including stepping motors) 'Comstep' independent control of 2 stepping motors by PC (through the parallel port) with 2 motors and software ..... Kit = £67.00. . . Ready built = £99.00
Software support and 4 digital inputs kit £27.00
Power interface 4A kit £36.00
Power interface 8A kit £46.00

Stepper kit 4 (manual control) includes 200 step stepping motor and control circuit £23.00
DTA30 Hand held transistor analyser. It tells you which lead is the base, the collector and emitter and if it is NPN or PNP or faulty (NEW VERSION does not say FETs & SCRs are transistors) DTA30 ..... £38.34
HMA20 hand held MOSFET analyser identifies gate drain and source and if P or N channel HMA20 ..... £38.34

Speaker cabinets 2 way speaker systems with Motorola tweeters

Speaker dia	15"	12"	8"
Power rating	250WRMS	175WRMS	100WRMS
Impedance	8ohm	8ohm	8ohm
Frequency range	40hz-20khz	45hz-20khz	60hz-20khz
Sensitivity (1W/1M)	97dB	94dB	92dB
Size in mm	500x720x340	450x640x345	315x460x230
Weight	21.1kg	16.8kg	7.4kg
Price each for black vinyl coating	£139.95	£99.99	£54.94
Grey felt coating	£159.97**	£119.97**	£64.99

(** = not normally in stock allow 1 week for delivery)

Power amplifiers 19" rack mount with gain controls & VU meters
STA300 2 x 190Wrms (4ohm load) 11kg £339.00
STA900 2 x 490Wrms (4ohm load) 15kg £585.00

LED's 3mm or 5mm red or green ..... 7p each ..... yellow 11p each
Cable ties ..... 1p each.... £5.95 per 1000 ... £49.50 per 10,000

Rechargeable batteries
AA (HP7) 500mAH ..... 0.99 ..... AA 500mAH with solder tags £1.55
AA 950mAH ..... £1.75 ..... C (HP11) 1.2AH £2.20
C 2AH with solder tags ..... £3.60 ..... D (HP2) 1.2AH £2.60
D 4AH with solder tags ..... £4.95 ..... PP3 8.4V 110mAH £4.95
1/2Ah with solder tags ..... £1.55 ..... Sub C with solder tags £2.50
AAA (HP16) 180mAH ..... £1.75 ..... 1/3 AA with tags (philps CTV) £1.95
Nickel Metal Hydride AA cells high capacity with no memory. If charged at 100ma and discharged at 250ma or less 1100 mAH capacity (lower capacity for high discharge rates) £3.75

—Special offers please check for availability.—

Stick of 4 42 x 16mm nicad batteries 171mm x 16mm dia with red and black leads 4.8v £5.95
5 button cell 6V 280mAH battery with wires (Varta 5 x 250DK) £2.45
Orbitel 866 battery pack 12v 1.6AH contains 10 sub C cells with solder tags (the size most commonly used in cordless screwdrivers and drills 22 dia x 42mm tall). It is easy to crack open and was manufactured in 1994 ..... £8.77 each or £110.50 per box of 14

BCI box 190 x 106 x 50mm with slots to house a pcb the lid contains an edge connector (12 way 8mm pitch) and screw terminals to connect to wires and 5 slide in cable blanks £2.95

7 segment common anode led display 12mm 0.45

GoAs FET low leakage current S8873 ..... £12.95 each ..... £9.95 10+ £7.95 BCS47A transistor 20 for £1.00

SL952 UHF Limiting amplifier I.C. 16 surface mounting package with data sheet £1.95

DC-DC converter Reliability model V12P5 12v in 5 v 200ma out 300v Input to output Isolation with data ..... £4.95 each or pack of 10 £39.50

Airpax A82903-C large stepping motor 14v 7.5° step 270ohm 68mm dia body 6.3mm shaft...£8.95 or £200.00 for a box of 30

Polyester capacitors box type 22.5m lead pitch
0.9uf 250Vdc ..... 18p each, 14p 100+, 9p 1000+
1uf 250Vdc ..... 20p each, 15p 100+, 10p 1000+
1uf 50v bipolar electrolytic axial leads ..... 15p each, 7.5p 1000+
0.22uf 250v polyester axial leads ..... 15p each, 7.5p 100+

Polypropylene 1uf 400vdc (Wima MKP10) 27.5mm pitch 32 x 29 x 17mm case ..... 75p each, 60p 100+

Philips 123 series solid aluminium axial leads
33uf 10v & 2.2uf 40v ..... 40p each, 25p 100+

Philips 108 series long life 22uf 63v axial ..... 30p each, 15p 1000+

500pf compression trimmer 60p

Solid carbon resistors very low inductance ideal for RF circuits
270ohm 2W, 68ohm 2W ..... 25p each, 15p each 100+

We have a range of 0.25w, 0.5w, 1w and 2w solid carbon resistors – please send S.A.E. for list.

P.C. 400W PSU (Intel part 201035-001) with standard motherboard and 5 disk drive connectors, fan and mains inlet/outlet connectors on back and switch on the side (top for tower case) dims 212 x 149 x 149mm excluding switch ..... £26.00 each. £138.00 for 6

MX180 Digital multimeter 17 ranges 1000vdc 750vac 2Mohm 200mA transistor Hfe 9v and 1.5v battery test £9.95

Hand held ultrasonic remote control £3.95

CV2486 gas relay 30 x 10m dia with 3 wire terminals will also work as a neon light ..... 20p each or £8.50 per 100

Verbatim R300NH Streamer tape commonly used on nc machines and printing presses etc. it looks like a normal cassette with a slot cut out of the top ..... £4.95 each (£3.75 100+)

Heatsink compound tube 0.95

HV3-2405-E5 5-24v 50mA regulator ic 18-264vac input 8 pin DIL package ..... £3.49 each (100+ £2.25)

LM555 timer ic 16p
8 pin DIL socket 6p

All products advertised are new and unused unless otherwise stated.
Wide range of CMOS TTL 74HC 74F Linear Transistors kits, rechargeable batteries, capacitors, tools etc always in stock. Please add £1.95 towards P&P (orders from the Scottish Highlands, Northern Ireland, Isle of Man, Isle of Wight and overseas may be subject to higher P&P for heavy items). VAT included in all prices.

JPG Electronics, 276-278 Chatsworth Road, Chesterfield S40 2BH
Mastercard/Visa Orders **(01246) 211202 Fax: 550959**
Callers welcome 9.30am to 5.30pm Monday to Saturday

CIRCLE NO. 134 ON REPLY CARD

SUPPLIER OF QUALITY USED TEST INSTRUMENTS

VISIT US ON
Web: http://www.cooke-int.com
E-mail: info@cooke-int.com

Cooke International

Unit Four, Fordingbridge Site, Barnham,
Bognor Regis, West Sussex, PO22 0HD, U.K.
Tel: (+44)01243 545111/2 Fax: (+44)01243 542457
Web: http://www.cooke-int.com
E-mail: info@cooke-int.com

CIRCLE NO. 135 ON REPLY CARD

OPERATING & SERVICE MANUALS

Cooke International

Unit Four, Fordingbridge Site, Barnham,
Bognor Regis, West Sussex, PO22 0HD, U.K.
Tel: (+44)01243 545111/2 Fax: (+44)01243 542457
Web: http://www.cooke-int.com
E-mail: info@cooke-int.com

CIRCLE NO. 136 ON REPLY CARD

ADVERTISERS INDEX

Airlink Sales	113	Olson Electronics	90
Anchor Supplies	144	Pico Technology	121
CMS	103	Quickroute Systems	119
Conford Electronics	121	RD Research	117
Dataman	OBC	Seetrax	132
Display Electronics	158	Sowter Transformers	156
Equinox Technology	IBC	Stewart of Reading	156
Field Electric	137	Surrey Electronics	137
Hart Electronics	145	Tandem Tech	IFC
Ice Technology	101	TDC	113
Johns Radio	164	Technology Education	121
JPG Electronics	171	Telford Electronics	153
Labcenter Electronics	92	Telnet	109
Langrex Supplies	171	Those Engineers	137
M&B Radio	119	Tie Pie	95
Milford Instruments	134	Weir Electronics	97
Number One Systems	144	Wood & Douglas	113

CLASSIFIED

TEL 0181 652 3620 FAX 0181 652 8956

ARTICLES FOR SALE

RF DESIGN SERVICES
All aspects of RF hardware development considered from concept to production.
WATERBEACH ELECTRONICS
TEL: 01223 862550
FAX: 01223 440853

AUDIO & RF DESIGN · DC to 3GHz
- Stereo Coders & processors
- RF Amplifiers & Transmitters
- Wireless Control Systems
- 2.4 GHz Audio & VideoLinks
- Aerial combining Systems

So whatever your need call us!
LIBRA SOLUTIONS
Tel. 0181-428 2776
mnoar@globalnet.co.uk

RF & Data/Comms Test Equipment (Ex Govt).
- HP, Tektronix, Philips, Gould, etc.
- Scopes (20MHz-20GHz DSO), Analysers, Sig Generators, and other items, Manuals, As New.

Cash Offers Invited for URGENT Sale
For Full Details call Victor on:
Tel: 01189 626866 Mobile: 0802 884155

SALE - INDUSTRIAL ELECTRONICS
Test equipment, Transducers, Valves, Connectors, Computers, Analysers, Components, Gauges, Meters, Printers, Rummage items, HP, Racal, IBM etc.
Near Southampton, 12-13 December
Technical and Scientific Supplies
Tel: 01703 891879 Fax: 01703 897079
e-mail: RJT@Compuserve.com

Lindos **LA100 Audio Analyser** **SALE**

We have a limited number of ex-demo units for sale at the very special price of
£3200 + VAT
(Normal List price £4200 + VAT)

These are in "as-new" condition, complete with Lin4win PC software and a full 12 month warranty. At these prices, it's cheque with order, so please send £3760 (inc VAT and carriage) per unit to:

Lindos Electronics Saddlemakers Lane Melton Woodbridge IP12 1PP
Tel: 01394 380307 Fax: 01394 385156 e-mail: info@lindos. co.uk

MARCONI 2380/2383 Spectrum Analyser, 100Hz to 4.2GHz. Internal T.G. 3Hz RBW. Markers, memory GPIB. Recently calibrated. £6,500. Tel: 0181-421 6606.

ELECTRONIC CIRCUIT ANALYSIS PROGRAM for PC calculates gain, phase, impedances. Provides printer and VGA output. Many examples £10. Tel: 01753 643384.

SWITCHING PSU REQUIRED? Surf: www,directou.mcmail.com Loads'a bargains.

SWIRES RESEARCH SA87 spectrum analyser, portable, 5-910MHz, 'leather' case, charger. As new condition. £550. Tel: 01327 358008.

ARTICLES WANTED

VALVES, etc, WANTED
Most types considered but especially KT88, PX4/PX25, KT66, KT77, EL34, EL37, ECC83. Valves must be UK manufacture to achieve top prices. Also various valve-era equipment e.g. Garrard 301.
COURTEOUS, PROFESSIONAL SERVICE
Ask for a free copy of our wanted List.
BILLINGTON EXPORT LTD., Billingshurst, Sussex RH14 9EZ
Tel: 01403 784961 Fax: 01403 783519
VISITORS PLEASE PHONE FOR APPOINTMENT.

TOP PRICES PAID
For all your valves, tubes, semi conductors and IC's.
Langrex Supplies Limited
1 Mayo Road, Croydon
Surrey CR0 2QP
TEL: 0181-684 1166
FAX: 0181-684 3056

WANTED – Old cipher equipment and "spy radio sets". 0Z8RO Rag Otterstad, Hosterkobvej 10 DK-3460 Birkerod, Denmark. Fax: ++45 44681514.

WANTED – W.W.II. German and S.O.E. clandestine sets, receivers. Also incomplete sets. 0Z8RO Rag Otterstad, Hosterkobvej 10 DK-3460 Birkerod, Denmark. Fax: ++45 44681514.

WANTED: PRE-WAR TV. Offered: Network Analyser HP8505A. Jac Janssen, Hogeham 117D, NL-5104JD Dongen Netherlands. Fax: +3113 4624684. Thanks

RECRUITMENT

INNOVISION
research and technology

...is a growing company with a reputation to do the impossible! We design and develop new products for a host of multinational companies, using new technologies and processes. We offer a competitive advantage to our customers – and an exciting and challenging career for you!

WE ARE LOOKING FOR:
(outstanding individuals)
Embedded Software Engineers*
Hardware Design Engineers*
Design Technicians (new graduates considered)

THE RIGHT CANDIDATES MUST HAVE:
- Good degree in Electronic Engineering (min. HND in case of Technician).
- High professional and quality standards.
- Excellent problem-solving and lateral-thinking abilities.
- The ability to work in a team and manage their own projects.

IN RETURN WE CAN OFFER YOU:
1. An excellent salary
2. International travel
3. Healthcare membership
4. An incentive Scheme.

NEXT STEPS
Fax, email or post your CV to Jenny Greenfield (Project Development Manager), Innovision R&T Ltd., Exa House, Alexandra Court, Wokingham, Berks RG40 2SJ. (M4 - Junction 10)
Tel: 0118 979 2000. Fax: 0118 979 1500.
Email: Jenny@innovision-group.com.

ADVERTISERS PLEASE NOTE
For all your future enquiries on advertising rates
Please contact Joannah Cox on
Tel: 0181-652 3620
Fax: 0181-652 8956

JOHN PRODGER RECRUITMENT

Calling all Radio Technicians

We have some excellent opportunities for systems professionals at all levels working in the fields of:

GSM
Fixed Access Radio
Military CIS
PMR DECT TETRA
Satellite Communications
x25 x400 Internet

We would be glad to focus our efforts on securing your next move. Please call Gareth Shaw, (ref. 1968H).
Tel: 01727 841101 Fax: 01727 838272
Email: gareth@jprecruit.com

JPR, The Courtyard, Alban Park, Hatfield Rd, St Albans, Herts AL4 0LA.

To find out more about these opportunities, please telephone quoting reference number on 01273 820911 until 7.00pm this week or next. Alternatively, post / fax / Email your CV to:

Quest Recruitment Solutions Ltd
24-26 Meeting House Lane
The Lanes
Brighton
East Sussex
BN1 1HB

Tel: 01273 820911
Fax: 01273 820922.
E-mail: quest@pavilion.co.uk
Web: www.questsolutions.co.uk

QUEST
RECRUITMENT
SOLUTIONS

GSM NETWORKS
Systems Specialists

Technical expertise in cellular switching, signalling or radio systems and excellent communication skills will enable you to specify the future architecture and technical strategy of the most dynamic European mobile network/s. One of top 3 infrastructure companies heavily investing in people & technology to work directly alongside operators key specialists. Flexible base.

Ref: AW/10

RF IC DESIGN TELECOM APPS
UK/Europe/USA Excellent Package

Major semiconductor manufacturers require talented RF IC design engineers with proven initial design experience of min. 2 years in analog (RF) design, biopolar or BICMOS technologies. Knowledge of design tools such as Cadence, Spice, Spectre RF and experience on GSM, DECT, DCS or Radiocom systems would be a plus. Full relocation for all positions.

Ref: ML/10

HARDWARE DESIGN
UK/Europe Excellent Package

A background in digital design will enable you to join this dynamic organisation working on leading edge electronics hardware and software technology for embedded processor design. You will have between 1 to 10 years digital design experience using microcontrollers, FPGA design, ideally knowledge of high level system design tools and be educated to degree level.

Ref: EM/11

SOFTWARE
Get into GSM >£35K

Mobile comms company willing to provide training to R/T design engineers with a good understanding of embedded systems. Systems analysis and specification through to implementation of design with as much responsibility as you wish to take on. Project ownership /leadership available to experienced GSM engineers. Excellent salary + benefits + relocation.

Ref: AW/11

MICROCONTROLLER DESIGN
Europe/USA Excellent Package

As a result of significant investment in Europe, a brand new design centre dedicated to microcontrollers has been opened by one of the world leaders in electronics. They now seek experienced design engineers to work on next generation microcontrollers. You will be able to contribute from the outset to the success of future products. Opportunities also exist within Europe/USA.

Ref: ML/11

SOFTWARE TEAM LEADER GSM RADIO PLANNING TOOL
South West Excellent Package

International, young rapidly expanding telecoms company needs experienced software developer to lead a team of software engineers to design network planning tool software. Opportunity to work with market leaders across the world. UNIX/C, X Windows, Embedded SQL essential, GSM and team management experience preferred.

Ref: AR/11

PRINCIPAL ENGINEER
M3/M4 Corridor Excellent Package

Lead a tactical design team of performance planning/analysis engineers to plan and build national carrier grade ATM data network. Help create a new age of communications infrastructure. Desired experience ATM/Frame Relay/Legacy data networks, Newbridge and Nortel platforms, network support/management. Excellent prospects in leading national telecoms player.

Ref: AR/10

RADIO PLANNING LEADER
UK & International

World leader requires experienced radio planner with understanding of cellular systems implementation and optimisation to take a key role in a UK based international project leadership group. As much responsibility as you can handle on the latest licenses across Europe & MEA. Excellent Company, group, salary and benefits & relocation if required.

Ref: AW/12

VLSI/LSI DESIGN
UK to £45k

Rapid expansion within leading IC design houses involved in comms, consumer, automotive and computer markets has created the need for experienced engineers in ASIC and LSI design using Verilog or VHDL and synthesis tools such as Synopsis. We require engineers at all levels from junior through to Principal/Project Leader level.

Ref: EM/10

SYSTEMS ENGINEERS - SDH
South UK Excellent Salaries

Join this world leading telecom multinational and work on exciting, state of the art systems projects on SDH. Ideally you will have experience in either telecoms transmission or datacoms protocols, together with a degree enabling you to contribute to new 10 Gbit/s (and above) system design. Excellent career prospects with real opportunities for ongoing training and travel.

Ref: EM/12

IC DESIGN / APPS
Europe / USA Full Reloc Excellent Salaries

Key players in microelectronics require experienced design and applications engineers with at least 3 years experience in one of the following: full custom digital CMOS, full custom VLSI, semi custom CMOS and bipolar, ASICs with experience of leading EDA tools. Excellent career opportunities for talented and motivated engineers.

Ref: ML/12

R & D IN EUROPE
Full Relocation Excellent Salaries

Top class engineers are required to join "state of the art" R& D centres involved in wireless developments for the next millennium.

- RADIO FREQUENCY bipolar/frequencies 1-2 Ghz.
- HARDWARE high speed baseband architectures for terminals, DSP, algorithms.
- SOFTWARE C, C++, systems & protocols design for ATM, GSM, DECT, APIs, MMIs, Real Time OS, speech recognition & synthesis.

Ref: JPR

ELECTRONIC UPDATE

Contact Joannah Cox on
0181-652 3620

A regular advertising feature enabling readers to obtain more information on companies' products or services.

New 1998 Instrumentation Catalogue

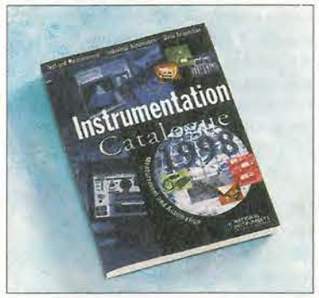

Send for your free copy of the new 1998 Instrumentation Catalogue from National Instruments. Featuring more than 600 hardware and software products for virtual instrumentation including new solutions for data acquisition and visualisation, MMI/SCADA and computer based image capture and analysis. Not merely a catalogue, it includes many useful tutorials, product line overviews and helpful selection guides making it invaluable for any engineer or scientist.

CIRCLE NO. 137

Call National Instruments for your **FREE** copy on: 01635 523545

Professional Test & Measurement Equipment

• ralfe electronics • exclusively professional T&M •
• 36 Eastcote Lane • South Harrow • Middx HA2 8DB • England •
☎ (+44) 0181-422 3593 ■ Fax (+44) 0181-423 4009 ■
Est 16 years

Ralfe Electronics are suppliers of high end, professional T&M equipment on a second-user basis. We specialise in stocking, and sourcing, HP, Tektronix, Marcom etc all ISO9002 quality assured.

Call or fax us for our stock inventory or download it from:
www.ralfe-electronics.co.uk
Tel: +44 0181 422 3593
Fax: +44 0181 423 4009

CIRCLE NO. 138 ON REPLY CARD

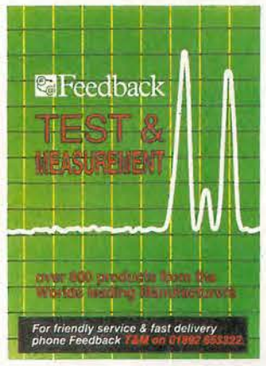

NEW Feedback T&M Catalogue

The latest edition of the Feedback Test & Measurement catalogue is now available. Over 60 pages packed with more than 800 products divided into over 20 sections. The catalogue is indexed for both product and manufacturer and is fully illustrated. Whether you are looking for an individual product, a complete workstation, or a solution to a particular Test & Measurement need the NEW Feedback catalogue will sove your problems, **send for a copy NOW!**

CIRCLE NO. 139 ON REPLY CARD

NEW JENSEN TOOLS CATALOGUE

Colourful new Catalogue, hot off the press from Jensen Tools, presents unique new tool kits for service/support of communications equipment. Also latest test equipment from many major manufacturers. Includes hard-to-find tools, PC/LAN diagnostics, bench acccessories, static control, technical manuals . and more.

Ring 0800 833246 or
Fax 01604 785573 for a free copy.
Jensen Tools, 10-12 Ravens Way, Northampton NN3 9UD

CIRCLE NO. 140 ON REPLY CARD

KOMPASS

"Following just one year's advertising, our customer base has increased by 55% in the UK"
Mr. P Hart
W E Couplings & Coatings

Over 170,000 buyers are using the **UK Kompass Register** every day to find companies like yours.
Is it you they're finding or your competitors?

To advertise in the next edition, simply fill in the coupon and post it back today to:
Reed Business Information, Windsor Court, East Grinstead House, East Grinstead, West Sussex RH19 1XD
or Fax it on 01342 335747

Available in book and CD Rom versions and also on the Internet!
www.kompass.com

Please contact me to advertise in the next edition of Kompass.

Title: Initial: Surname:
Job Title: E-mail:
Company:
Address:
Post Code:
Nature of Business:
Tel No: Fax No:

CIRCLE NO. 141 ON REPLY CARD

The Ultimate 8051 Microcontroller Programmer

- Supports Atmel FLASH 89C +89S, Generic 87C51/52/FA/FB/FC microcontroller derivatives
- FLASH & E2 libraries also available as chargeable update

NOW FROM ONLY £125.00

▲ **£125.00** Order Code: MPW-SYS

8051 2K Starter System

For C51 Project Development...in a **FLASH**
Includes: Programmer, Evaluation module and PK51-2K ▶

▲ **£199.00** Order Code: AT-89C-2K-ST

In-System Programming (ISP)

"Now you can program the 8051 or the AVR™ without removing the device from the socket!"

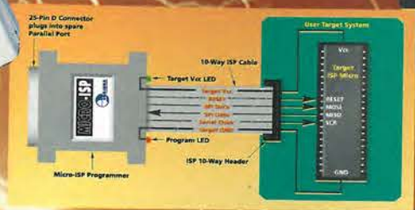

£39.95 Order Code: UISP-V2-SYS ▲

▼ *Programmer Interface Software for Windows™*

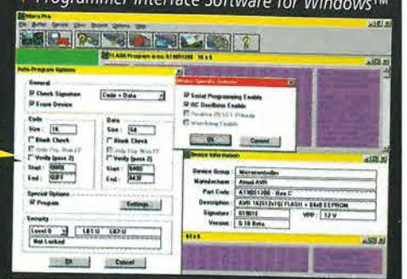

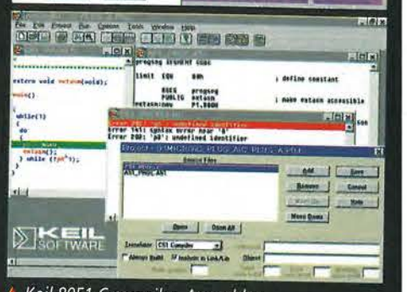

▲ *Keil 8051 C compiler, Assembler, Simulator (2K code), Windows™ IDE*

▲ **£99.00** Order Code: PK51-2K

89S Socket Stealer Module

Simply plug this into your existing 8051 or AVR™ socket for **INSTANT** In-System Programming

NO Target System redesign required.

£49.00 Order Code: SS-89S-DIL40 ▲

AVR™ Professional Starter System

▼ Order Code: AVR-ST £59.95

FEATURES

- Supports Atmel 90S (AVR) RISC microcontroller family
- Supports Parallel Programming mode in ZIF socket
- Supports In-System Programming via ribbon cable (provided)
- Equinox FAST ISP Programming Algorithm
- All on-chip facilities supported e.g. RC Osc.

SYSTEM CONTENTS

- Professional Device Programmer
- Atmel AVR™ Assembler
- AVR™ Basic Lite Compiler (NEW)
- Atmel Databook on CD ROM
- Power Supply
- ISP Ribbon Cable (to target)
- Serial Cable (to host PC)

NOW SUPPLIED WITH AVR BASIC LITE

Write in BASIC, Run in a FLASH

NEW

From Only £24.95!

- Compiled BASIC generates tight AVR™ machine code
- Not a Run-Time Interpreter; NO code overhead!
- Target speeds comparable with assembler
- Breaks the cost barrier for small projects
- Ideal for educational, hobbyist and professional use

AVR BASIC LITE

- AVR™ BASIC LITE only supports the AT90S1200 (512 words code)
- 8K version also available

Order Code: AVR-BAS-LIT £24.95

EQUINOX TECHNOLOGIES
EQUINOX TECHNOLOGIES UK LIMITED

The Embedded Solutions Company

PROVIDING THE SOLUTIONS TO YOUR PROBLEMS!

Tel: +44 (0) 1204 491110
Fax: +44 (0) 1204 494883
For product information visit our web site at:
www.equinox-tech.com
E-mail: sales@equinox-tech.com
229 Greenmount Lane Bolton BL1 5JB UK

EQUINOX DISTRIBUTORS: **AUSTRALIA** Farnell +61 2 9645 8888 **AUSTRIA** Farnell +43 0660 87 75 **BELGIUM** Alcom Electronics Nv/sa +32 3 227 36 47 Farnell +32 03 227 36 47 **BRAZIL** Hastec +55 11 522 1799 Anacon +55 11 453 5588 **DENMARK** Farnell +45 44 53 66 44 **EIRE** Farnell +353 1 8309277 **FINLAND** Farnell +358 9 3455 400 **FRANCE** Farnell +33 474 65 94 66 Newtek +33 1 4687 2200 **GERMANY** Farnell +49 89 61 39 39 39 Ineltek GmbH +49 7321 93850, MSC Vertriebs GmbH +49 08 9945532 12 **GREECE** Microlec +30 1 5395042 4 **HONG KONG** Farnell 800 968 280 (HK Direct Toll Free) **ITALY** Farnell +44 113 231 1311 Grifo Italian Technology +39 51 89 20 52, Newtek Italia +39 2 33 10 53 08 **MALAYSIA** Farnell +60 3 773 8000 **NETHERLANDS** Alcom Electronics BV +31 10 4519533 Farnell +31 30 241 2323 **NEW ZEALAND** Farnell +64 9 357 0646 **NORWAY** ACTE NC +47 63898900 Jakob Hatteland Electronic AS +47 53763000 **PORTUGAL** Anatronic +35 119 371 834 Farnell +44 113 289 0040 **SINGAPORE** Farnell +65 788 0200 **SPAIN** Anatronic SA +34 1 366 01 59 Farnell +44 113 231 0447 **SWEDEN** ACTE NC +46 8 445 28 70 Farnell +46 8 730 50 00 **SWITZERLAND** Anatec Ag +41 41 748 32 41 Farnell +41 1 204 64 64 **UNITED KINGDOM** Abacus Polar +44 1925 626626, Farnell +44 113 263 6311 GD Technik +44 1734 342277 Rapid Electronics +44 1206 751166 Quarndon Electronics +44 1332 332651 **USA** Hitools Inc +1 408 298 9077 Newark Electronics +1 800 718 1997, Peachtree Technology +1 770 888 4002 Pioneer Standard +1 888 832 3976

Equinox reserves the right to change prices & specifications of any of the above products without prior notice. E&OE. All prices are exclusive of VAT & carriage. AVR™ is a trademark of the Atmel Corporation

CIRCLE NO. 103 ON REPLY CARD

[TRUTH OR ILLUSION?]

the world's most powerful portable programmers

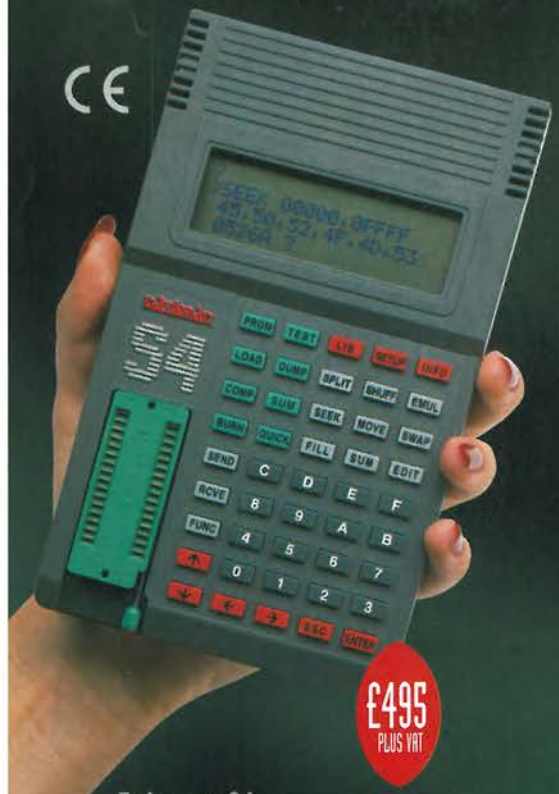

£495 PLUS VAT

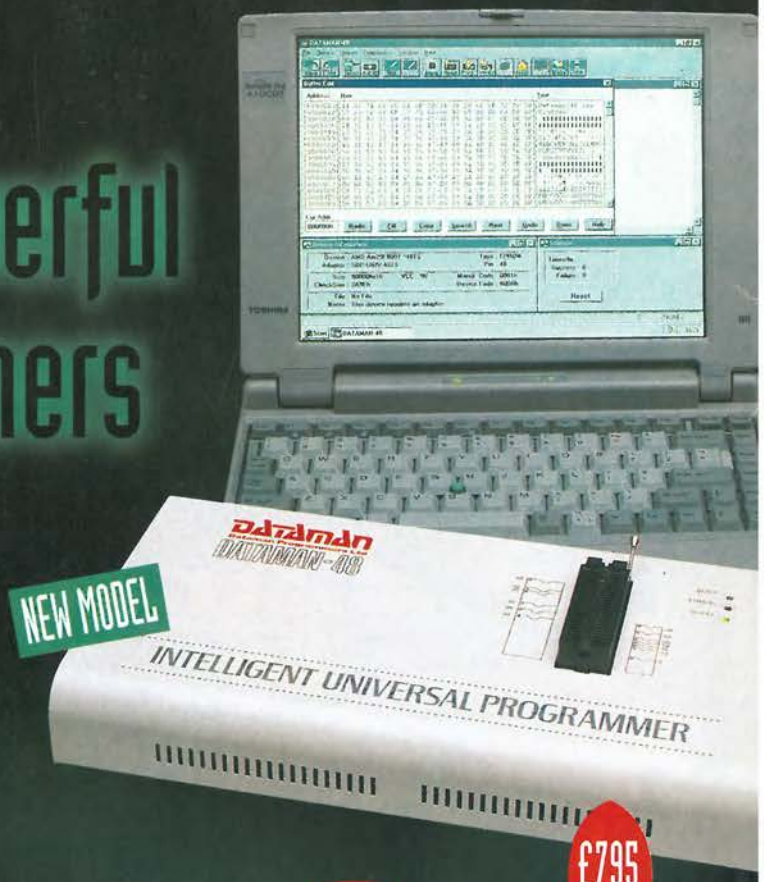

NEW MODEL

£795 PLUS VAT

Dataman S4

[Analysis]

- Programs 8 and 16-bit EPROMs, EEPROMs, PEROMs, 5 and 12V FLASH, Boot-Block FLASH, PICs, 8751 Microcontrollers and more.
- EPROM emulation as standard!
- Rechargeable battery power for total portability.
- All-in price includes emulation leads, AC charger, PC software, spare library ROM, user-friendly manual.
- Supplied fully charged and ready to use.

S4 GAL Module

[Analysis]

- Programs wide range of 20 and 24 pin logic devices from the major GAL vendors.
- Supports JEDEC files from all popular compilers.

Dataman-48LV

[Analysis]

- Plugs straight into your parallel port of PC or laptop.
- Programs and verifies at 2, 2.7, 3, 3.3 and 5 V
- True no-adaptor programming right up to 48-pin DIL devices.
- Free universal 44-pin PLCC adaptor.
- Built-in world standard PSU – for go-anywhere programming.
- Package adaptors for TSOP, PSOP, QFP, SOIC and PLCC.
- Optional EPROM emulator.

Support

[Analysis]

- 3 year parts and labour guarantee.
- Windows/DOS software included.
- Free software updates via BBS/Internet.
- Free technical support for life.
- Next day delivery – always in stock.
- Dedicated UK supplier, established 1978.

Truth – Claim Verified

[Recommended Action]

Secure for own use without delay. Order via credit card hotline – phone today, use tomorrow. Alternatively, request more detailed information on these and other market-leading programming solutions.

3 YEAR GUARANTEE

DATAMAN

Dataman Programmers Ltd, Station Road,
Maiden Newton, Dorchester, Dorset, DT2 0AE, UK
Telephone +44/0 1300 320719 Fax +44/0 1300 321012
BBS +44/0 1300 321095 (24hr) Modem V.34/V.FC/V.32bis
Home page: http://www.dataman.com
FTP: ftp.dataman.com Email: sales@dataman.com

hotline
01300 320719

Orders received by 4pm will normally be despatched same day.
Order today, get it tomorrow!

Money-back 30-day Trial

Try the Dataman S4 or Dataman-48LV without obligation for 30 days. If you do not agree that these truly are the most powerful portable programmers you can buy, simply return your Dataman product within 30 days for a full refund.

CIRCLE NO. 102 ON REPLY CARD

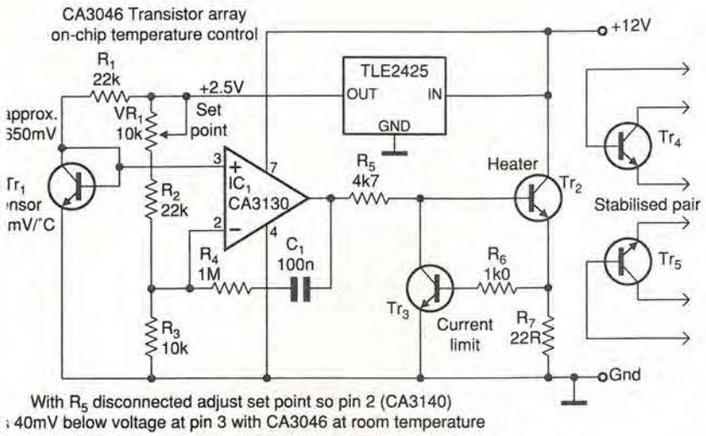

Fig. 12. In some applications, it is desirable to keep a transistor junction at a fixed, stable temperature. Using a CA3046 transistor array ensures that the transistor being used as a heater and the transistor that forms the temperature sensor are in intimate contact. This configuration keeps the junction temperature within 0.01°C over a 10°C change in ambient temperature.

Stud mounting diodes and small power transistors are easily bolted down to flat surfaces and make very cheap and convenient sensors where size is not a problem. Don't forget though that the metal cases are not usually galvanically isolated.

Figure 11 shows the calibration curve for a *BC182* diode-connected transistor. The response is seen to be linear with a slope of –2.11mV/ºC. Transistor current was kept at 100µA; for other currents the slope will be the same but the graph will move up or down logarithmically at a rate of 60mV per factor of 10 change.

There are more subtle ways to use transistors as sensors. In applications using logarithmic amplifiers, the log function is usually produced using a bipolar transistor in the feedback loop of an op-amp. The Ebers-Moll equation defines the collector current as an exponential function of base-emitter voltage, and there will be both gain and offset drifts if the transistor's temperature is allowed to change.

A clever solution I have seen in several sources is to use a transistor array of the *CA3046* variety. Of the five transistors in the array, one is used as the temperature sensor, another as the heating element and the remaining three are available for applications requiring stability; i.e. the log transistor or a stabilised matched pair.

A typical circuit is shown in **Fig. 12**. This is the best example I know of for ensuring that the sensor and heater are in intimate thermal contact. It is easy to control the array to 0.01ºC for an ambient change of 10ºC. Warm-up time is very fast too, at less than a second.

There is an alternative approach to using diodes as sensors; the differential resistance under forward bias is given by the well known equation,

$$R(diff) = \frac{kT}{qI}$$

where k is Boltzmann's constant, T the absolute temperature in kelvin, q the electron charge and I the diode current.

None of these terms relates to the physical characteristics of the p-n junction. In theory the sensor transistor or diode can be replaced without changing the calibration. An excellent sensor interface based on this principle is described by H. Kuhne in *Elektor*, September 1993.

Integrated circuit sensors

Last but not least we come to a rather mixed bag of IC sensors. These come with various output formats and are best discussed on an individual basis;

AD590. Produced by Analog Devices and Philips, this useful sensor is a two-wire type in a metal TO18 can, which is isolated from the chip. It produces a current output of 1µA/kelvin.

The current output means that the sensor cable resistance can be ignored. The metal can fits tightly into a 4.7mm hole. Alternatively I have found that the unit can be soldered into place by the can without destroying it. The range is –55 to +150ºC and the offset error 3ºC maximum, although in practice all the units I have used have been within a degree at room temperature.

The current output is easily converted to 10mV/ºC with a precision 10kΩ resistor: this is the arrangement used in the final controller design to be published in my next article. The principle is shown above in **Fig. 13**.

Since the chip inside the *AD590* is bonded to the metal case and connected to the pins via very fine gold wires, it suffers less from heat leaks down the connecting wires than some other types of IC sensor. For very accurate control this may be a worthwhile advantage.

All things considered this is an excellent sensor, albeit slightly expensive at £8 to £10. It does not suffer from high frequency oscillation problems.

LM35, LM45. Made by National Semiconductor, these three-wire sensors are housed in a plastic or metal case. The output is a very convenient 10 mV/ºC from a low impedance source.

The *LM35* comes in two grades, The *LM35C* covers –40 to +110 ºC with a maximum error of 0.4ºC while the cheaper *LM35D* and *LM45* cover 0 to 100ºC with maximum errors of 0.9 and 3.0ºC respectively.

There is also an *LM34* available calibrated for fahrenheit measurements. These sensors are quite cheap.. The *LM35C* and *LM35D* cost about £5 and £3 respectively in one-off quantities.

The *LM35* comes in a steel TO46 can or plastic TO92 case and the *LM45* in a tiny surface mount package which makes it one of the smallest sensors available. But this makes it is quite a challenge to solder on three wires.

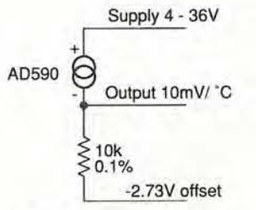

Fig. 13. Connection of the AD590 temperature sensor is very simple, needing only one resistor to produce a 10mV/°C output.

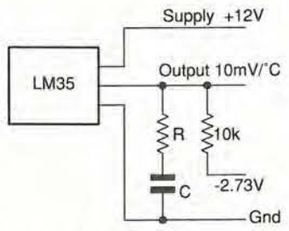

Fig. 14. Cable capacitance can cause the LM35 to become unstable. Adding a resistor to the IC output stops this, but the arrangement shown is better.

There are a few practical points worth noting. If operation is required only above about 4ºC with short connecting leads then no extra components are needed. At lower temperatures, the output terminal has to be returned to a negative supply via a pull-down resistor. The value of the resistor is not too important as the output impedance of the sensor is very low; NS suggests a tail current of the order of 50µA.

In **Fig. 14**, I have shown the output returned to –2.73V via a 10kΩ, 0.1% resistor. Neither value is critical for operation of the *LM35*, but using them allows an input circuit that accommodates both the *LM35* and the *AD590* without modification. This is a useful feature on a general purpose controller.

If the sensor is presented with a long cable, the extra capacitance, if greater than 50pF, can cause high frequency oscillations. These oscillations may not be noticed at first since the average dc level from the sensor is approximately correct. The real problem is that oscillation can start and stop in an apparently random fashion and each time a small change is seen in the reading.

National recommends fitting a resistor in series with the output terminal at the sensor to isolate the cable capacity. This is undoubtedly the most effective solution but can make the sensor assembly bulky and awkward to replace. It also raises the source impedance.

As an alternative, I have found that terminating the sensor cable at the controller end with a series *RC* network solves the problem. The idea is that most twisted pair/triple cables behave like transmission lines of a few hundred ohms impedance, much like telephone lines. Termination with a resistance removes the effect of the cable capacity. A 560Ω resistor in series with 0.1µF works reliably.

The capacitor stops dc current causing self heating of the sensor. It is also possible to use the termination components as a low-pass filter to stop induced pickup on the sensor wires interfering with the controller operation.

The final issue relates to thermal performance; the three leads form a heat leak into the sensor and may cause calibration errors. The wires should be thin. If possible, run the connecting wires along the surface of the item being controlled. This problem is much worse with-the plastic-cased device; the heat leak down the leads is greater while at the same time the thermal conductivity from the silicon die to the case is lower.

This short review is far from exhaustive and a rummage through distributors' catalogues will reveal temperature sensitive chips with various weird and wonderful facilities; some have built-in op-amps and Schmitt triggers – such as the *LM3911* and *TMP01* – and one – the Dallas *DS1620* – has an analogue-to-digital converter with serial interface.

My next article deals with thermoelectric Peltier coolers and describes a general purpose analogue temperature controller. ■

LANGREX SUPPLIES LTD

PHONE 0181 684 1166 — FAX 0181 684 3056

DISTRIBUTORS OF ELECTRONIC VALVES TUBES AND SEMICONDUCTORS AND I.C.S.

1 MAYO ROAD ● CROYDON ● SURREY CR0 2QP

24 HOUR EXPRESS MAIL ORDER SERVICE ON STOCK ITEMS

	£ p						
AZ31	6.00	KT66 China	10.00	5Z4GT	3.00	6V6G	8.00
CL33	10.00	KT88 China	12.00	6AQ5	2.00	6V6GT	5.00
E88CC	8.50	N78	8.00	6AR5	20.00	6X4	3.00
E180F	3.50	OA2	3.00	6AS7G	7.50	6X5GT	3.00
E810F	20.00	OB2	3.00	6AU5GT	4.00	12AT7	3.00
EABC80	2.00	OC3	3.00	6AU6	2.00	12AU7	3.50
EB91	1.50	OD3	3.00	6AW8A	4.00	12AX7	5.00
EBF80	1.50	PCF80	2.00	6B4G	22.00	12AX7A	7.50
EBF89	1.50	PCL82	2.00	6BA6	1.50	12AX7W	6.00
EBL31	15.00	PCL85/805	2.50	6BE6	1.50	12BA6	2.00
ECC33	12.00	PCL86	2.50	6BH6	2.00	12BE6	2.00
ECC35	12.00	PD500	8.00	6BQ7A	2.00	12BH7/1	10.00
ECC81	3.00	PL38	3.00	6BR7	4.00	12BY7A	7.00
ECC82	3.50	PL81	2.00	6BR8	4.00	12DW7	15.00
ECC83	5.00	PL504	3.00	6BW6	4.00	12E1	10.00
ECC85	3.50	PL508	3.00	6BW7	3.00	13E1	85.00
ECC88	6.00	PL509/519	10.00	6BZ6	3.00	572B	85.00
ECC808	15.00	PL802	4.00	6C4	2.00	805	45.00
ECF80	1.50	PY500A	3.00	6CB6A	3.00	807	7.50
ECH35	3.50	PY800/801	1.50	6CD6G	5.00	811A	25.00
ECH42	3.50	QQV02-6	12.00	6CL6	3.00	812A	55.00
ECH81	3.00	QQV03-10	5.00	6CG7	7.50	813	27.50
ECL82	3.50	QQV03-20A	10.00	6CH6	3.00	833A	85.00
ECL86	3.50	QQV06-40A	12.00	6CW4	6.00	866A	20.00
ECLL800	25.00	U19	8.00	6DQ5	17.50	872A	30.00
EF37A	3.50	UABC80	1.50	6DQ6B	10.00	931A	25.00
EF39	2.75	UCH42	5.50	6F6G	6.00	2050A	12.50
EF40	4.00	UCL82	2.00	6FQ7	7.50	5751	6.00
EF86	10.00	UCL83	2.00	6GK6	4.00	5763	6.00
EF91	2.00	UF89	4.00	6J5G	6.00	5814A	5.00
EF183/4	2.00	UL41	12.00	6J5M	4.00	5842	12.00
EL33	15.00	UL84	3.00	6J7	3.00	6072A	6.00
EL34	8.00	UY41	4.00	6JB6A	27.50	6080	6.00
EL34G	6.00	UY85	2.00	6JE6C	27.50	6146B	15.00
EL36	5.00	VR105/30	3.00	6JS6C	27.50	6201	8.50
EL41	3.50	VR150/30	3.00	6K6GT	4.00	6336A	35.00
EL84	2.25	Z759	10.00	6L6G	15.00	6550A	25.00
EL95	2.00	Z803U	15.00	6L6GC	15.00	6883B	15.00
EL360	15.00	2D21	3.50	6L6WGB	10.00	7025	7.50
EL509/519	12.00	3B28	12.00	6Q7	3.00	7027A	25.00
EM34	15.00	4CX250B	45.00	6SA7	3.00	7199	15.00
EM81/4/7	15.00	5R4GY	7.50	6SC7	3.00	7360	25.00
EN91	4.00	5U4G	10.00	6SG7	3.00	7581A	15.00
EZ80/81	7.50	5U4GB	10.00	6SJ7	3.00	7586	15.00
GZ32	3.50	5V4G	4.00	6SK7	3.00	7587	20.00
GZ33/37	8.50	5Y3GT	2.50	6SL7GT	5.00		
KT61	6.00	5Z3	5.00	6SN7GT	5.00	*Prices correct when going to press.*	
	15.00	5Z4G	6.00	6U8A	1.50		

OPEN TO CALLERS MON-FRI 9AM-4PM. CLOSED SATURDAY

This is a selection from our stock of over 6000 types. Please enquire for types not listed. Obsolete items are our speciality. Valves are new mainly original British or American brands. Terms CWO/min order £10 for credit cards.

P&P 1-3 valves £2.00. 4-6 valves £3.00

Add 17.5% VAT to total including P&P.

VISA MasterCard

CIRCLE NO. 133 ON REPLY CARD

New Special Offers

Mini waterproof TV camera 40x40x15mm requires 9 to 13 volts at 120mA with composite video output (to feed into a video or a TV with a SCART plug) it has a high resolution of 450 TV lines Vertical and 380 TV lines horizontal, electronic auto Iris for nearly dark (1 LUX) to bright sunlight operation and a small lens with a 92 degree field of view, it focuses down to a few CM. It is fitted with a 3 wire lead (12v in gnd and video out). Now also available with wall mount tilt and swivel case (at the same price) ..£93.57 + VAT = £109.95 ..or 10+ £89.32 + VAT = £104.95

Board cameras all with 512 x 582 pixels 4.4 x 3.3mm sensor 9-13 volts power supply and composite video out. All need to be housed in your own enclosure and have fragile exposed surface mount parts. 47MIR size 60 x 36 x 27mm with 6 infra red leds (gives the same illumination as a small torch would) ..£50.00 + VAT = £58.75

40MP size 39 x 38 x 23mm spy camera with a fixed focus pin hole lens for hiding behind a very small hole ..£57.00 + VAT = £66.98

40MC size 39 x 38 x 28mm camera for 'C' mount lens this gives a much clearer picture than with the small lenses ..£68.78 + VAT = £80.83

Standard 'C' mount lens F1.6 16mm for 40MC ..£26.43 + VAT = £31.06

High quality stepping motor kits (all including stepping motors) 'Comstep' independent control of 2 stepping motors by PC (through the parallel port) with 2 motors and software Kit = £67.00. ..Ready built = £99.00

Software support and 4 digital inputs kit ..£27.00

Power interface 4A kit ..£36.00

Power interface 8A kit ..£46.00

Stepper kit 4 (manual control) includes 200 step stepping motor and control circuit ..£23.00

DTA30 Hand held transistor analyser. It tells you which lead is the base, the collector and emitter and if it is NPN or PNP or faulty (NEW VERSION does not say FETs & SCRs are transistors) DTA30 ..£38.34

HMA20 hand held MOSFET analyser identifies gate drain and source and if P or N channel HMA20 ..£38.34

Speaker cabinets 2 way speaker systems with Motorola tweeters

Speaker dia	15"	12"	8"
Power rating	250WRMS	175WRMS	100WRMS
Impedance	8ohm	8ohm	8ohm
Frequency range	40hz-20khz	45hz-20khz	60hz-20khz
Sensitivity (1W/1M)	97dB	94dB	92dB
Size in mm	500x720x340	450x640x345	315x460x230
Weight	21.1kg	16.8kg	7.4kg
Price each for black vinyl coating	£139.95	£99.99	£54.94
Grey felt coating	£159.97*	£119.97*	£64.99

(* = not normally in stock allow 1 week for delivery)

Power amplifiers 19" rack mount with gain controls & VU meters
STA300 2 x 190Wrms (4ohm load) 11kg ..£339.00
STA900 2 x 490Wrms (4ohm load) 15kg ..£585.00

LED's 3mm or 5mm red or green ..7p each ..yellow 11p each

Cable ties ..1p each.... £5.95 per 1000 ... £49.50 per 10,000

Rechargeable batteries
AA (HP7) 500mAH ..0.99 ..AA 500mAH with solder tags ..£1.55
AA 950mAH ..£1.75 ..C (HP11) 1.2AH ..£2.20
C 2AH with solder tags ..£3.60 ..D (HP2) 1.2AH ..£2.60
D 4AH with solder tags ..£4.95 ..PP3 8.4V 110mAH ..£4.95
1/2AA with solder tags ..£1.55 ..Sub C with solder tags ..£2.50
AAA (HP16) 180mAH ..£1.75 ..1/3 AA with tags (phips CTV) ..£1.95

Nickel Metal Hydride AA cells high capacity with no memory, if charged at 100ma and discharged at 250ma or less 1100 mAH capacity (lower capacity for high discharge rates) ..£3.75

—Special offers please check for availability.—

Stick of 4 42 x 16mm nicad batteries 171mm x 16mm dia with red and black leads 4.8v ..£5.95
5 button cell 6V 280mAH battery with wires (Varta 5 x 250DK) ..£2.45
Orbitel 866 battery pack 12v 1.6AH contains 10 sub C cells with solder tags (the size most commonly used in cordless screwdrivers and drills 22 dia x 42mm tall). It is easy to crack open and was manufactured in 1994 ..£8.77 each or £110.50 per box of 14

BCI box 190 x 106 x 50mm with slots to house a pcb the lid contains an edge connector (12 way 8mm pitch) and screw terminals to connect to wires and 5 slide in cable blanks ..£2.95

7 segment common anode led display 12mm ..0.45

GaAs FET low leakage current S8873 ..£12.95 each ..£9.95 10+ £7.95 BC547A transistor 20 for £1.00

SL952 UHF Limiting amplifier I.C. 16 surface mounting package with data sheet ..£1.95

DC-DC converter Reliability model V12P5 12v in 5 v 200ma out 300v input to output Isolation with data ..£4.95 each or pack of 10 £39.50

Airpax AB2903-C large stepping motor 14v 7.5° step 270ohm 68mm dia body 6.3mm shaft ..£8.95 or £200.00 for a box of 30

Polyester capacitors box type 22.5m lead pitch
0.9uf 250Vdc ..18p each, 14p 100+, 9p 1000+
1uf 250Vdc ..20p each, 15p 100+, 10p 1000+
1uf 50v bipolar electrolytic axial leads ..15p each, 7.5p 100+
0.22uf 250v polyester axial leads ..15p each, 7.5p 100+

Polypropylene 1uf 400vdc (Wima MKP10) 27.5mm pitch 32 x 29 x 17mm case ..75p each, 60p 100+

Philips 123 series solid aluminium axial leads
33uf 10v & 2.2uf 40v ..40p each, 25p 100+

Philips 108 series long life 22uf 63v axial ..30p each, 15p 1000+

500pf compression trimmer ..60p

Solid carbon resistors very low inductance ideal for RF circuits 270ohm 2W, 680ohm 2W ..25p each, 15p each 100+

We have a range of 0.25w, 0.5w, 1w and 2w solid carbon resistors – please send S.A.E. for list.

P.C. 400W PSU (Intel part 201035-001) with standard motherboard and 5 disk drive connectors, fan and mains inlet/outlet connectors on back and switch on the side (top for tower case) dims 212 x 149 x 149mm excluding switch ..£26.00 each, £138.00 for 6

MX180 Digital multimeter 17 ranges 1000vdc 750vac 2Mohm 200mA transistor Hfe 9v and 1.5v battery test ..£9.95

Hand held ultrasonic remote control ..£3.95

CV2486 gas relay 30 x 10m dia with 3 wire terminals will also work as a neon light ..20p each or £8.50 per 100

Verbatim R300NH Streamer tape commonly used on nc machines and printing presses etc. it looks like a normal cassette with a slot cut out of the top ..£4.95 each (£3.75 100+)

Heatsink compound tube ..0.95

HV3-2405-E5 5-24v 50mA regulator ic 18-264vac input 8 pin DIL package ..£3.49 each (100+ £2.25)

LM555 timer ic ..16p
8 pin DIL socket ..6p

All products advertised are new and unused unless otherwise stated.

Wide range of CMOS TTL 74HC 74F Linear Transistors kits, rechargeable batteries, capacitors, tools etc always in stock. Please add £1.95 towards P&P (orders from the Scottish Highlands, Northern Ireland, Isle of Man, Isle of Wight and overseas may be subject to higher P&P for heavy items). VAT included in all prices.

JPG Electronics, 276-278 Chatsworth Road, Chesterfield S40 2BH

Mastercard/Visa Orders **(01246) 211202 Fax: 550959**

Callers welcome 9.30am to 5.30pm Monday to Saturday

CIRCLE NO. 134 ON REPLY CARD