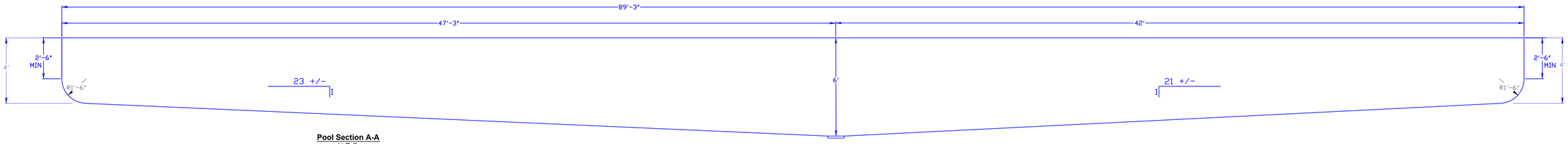

Pool Section A-A
N.T.S.

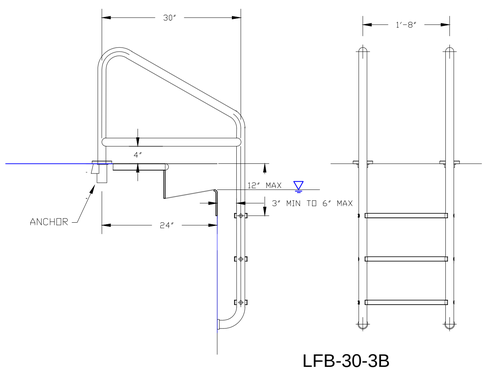

LFB-30-3B

Ladder Custom: S.R.Smith Custom, Stainless Steel
Tread: 6" Maximum from wall, 3" Minimum from wall.
Cross Braced, Slip Resistant Treads, 28" minimum / 36" max above deck.
Frame, 1.9" OD x .065", Type 304 Stainless Steel, with white rubber bumpe
Steps, acrylic plastic and have a slip resistant top surface.
Escutcheon, (p/n EP-100F), stainless steel.
Anchor Assembly: AS-100B (see spec sheet for SRS-908)

Ladder Detail
SCALE: nts

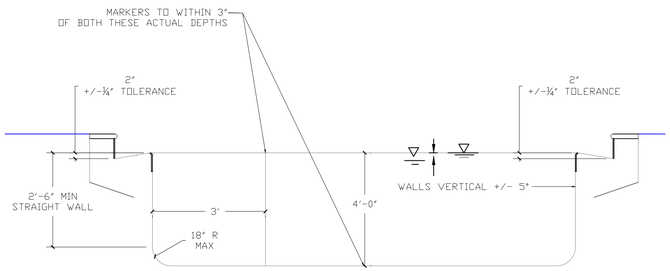

Transverse Main Pool Section, Shallow Portion
N.T.S.

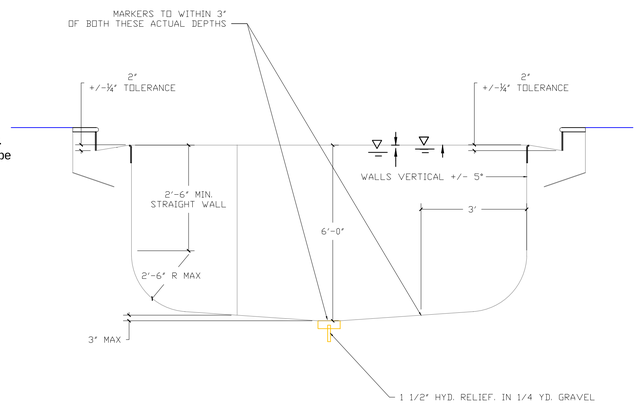

Transverse Pool Section, Deep Portion
N.T.S.

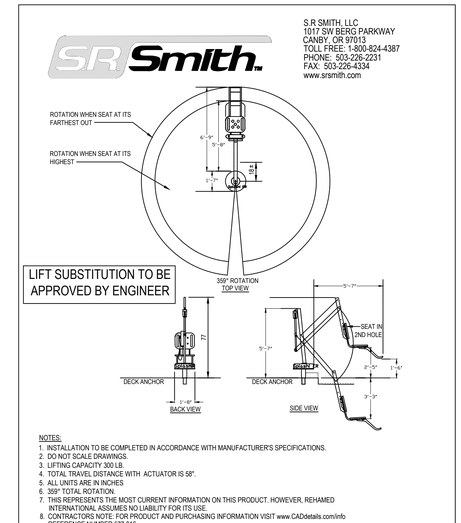

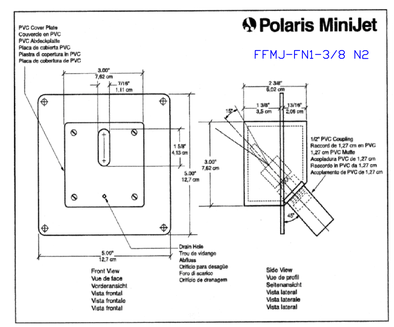

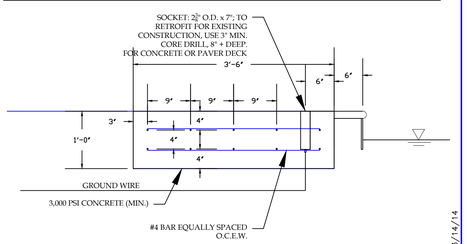

NOTE: CONCRETE PAD TO BE POURED FOR PAVER DECKS. CONCRETE DECKS TO BE CORED ONLY.

SECTION FOR LIFT AND PLATFORM ANCHOR
NTS

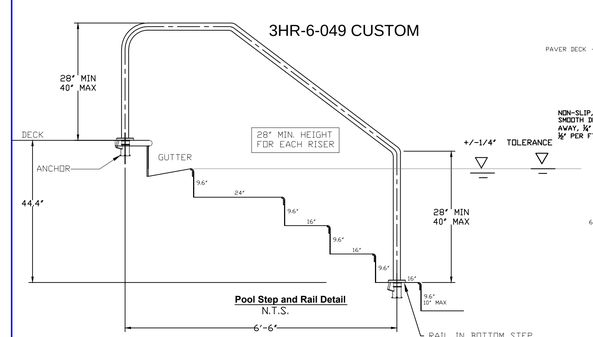

Pool Step and Rail Detail
N.T.S.

NOTE:
1. ALL STEP TILE SHALL BE SLIP RESISTANT, MUNSELL, COLOR VALUE FROM 0 TO 4, (DARK) AND CONTINUOUS AROUND ENTIRE STEP.
2. INTERMEDIATE STEPS SHALL BE UNIFORM IN WIDTH AND HEIGHT.
3. ALL SLIP RESISTANT TILE SHALL HAVE A COEFFICENT OF FRICTION OF AT LEAST 0.6 AS MEASURED USING ASTM C 1028.

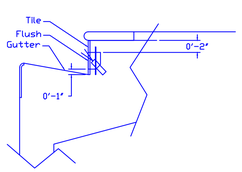

Jet Installation Detail
N.T.S.

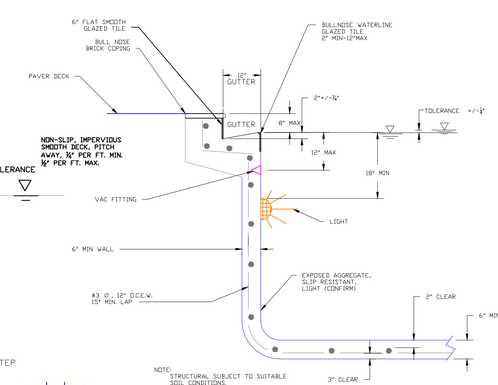

Gutter,Wall and Floor Detail
N.T.S.

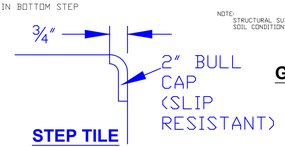

STEP TILE

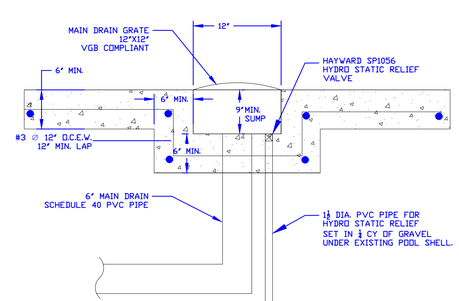

Main Drain Detail
N.T.S.

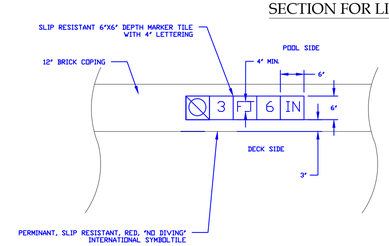

DEPTH MARKER DETAILS
N.T.S.

NOTE:
1. DEPTH MARKERS AND NO DIVING TILE NOT TO BE MORE THAN 24" FROM WATERS EDGE.
2. DEPTH MARKERS TO BE ON DECK AND INSIDE POOL AT WATER LINE.

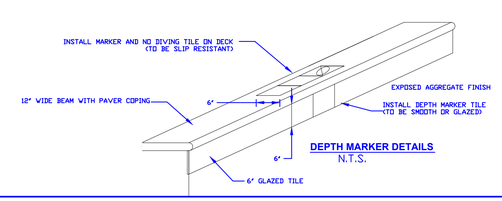

DEPTH MARKER DETAILS
N.T.S.

GB Collins Engineering PA
Certificate of Authorization 27934
Samuel A. Ikeratore PE 55710
1268 Rogers Street
Clearwater, FL 33756
Phone: (727) 442-8443
Fax.: (727) 442-6988
gb_collins@verizon.net

For: Heidt Design

Waterleaf Swimming Pool
Main Pool Profiles and Details

SAL 3/14/14

No.	Revision/Issue	Date

Sheet 4 of 5