Service Manual and Parts Catalog

ROCK-OLA

STAR CASTLE

FORM NO. 811

PRINTED IN U.S.A

PART NO. G-5020

ROCK-OLA ANALOG SWITCH SUBSTITUTION BOARD: G-5085-A

The industry wide shortage of analog switch (LF13331) which is used in the Rock-Ola Display Assembly, has made it necessary to use a substitution. The replacement part is No HI5045 (or HI5049).

Due to the discrepancy between the pinouts of the LF13331 and the HI5045, it is necessary to add a small printed circuit board to the display assembly to allow easy, reliable installation of the HI5045 analog switch in a 16 pin socket, filter caps for the regulator circuit consisting of R1, R2, D1, and C1 and a 12 inch 16 pin double ended ribbon cable assembly.

The HI5045 is a CMOS DPST analog switch with operating characteristics similar to that of the LF13331. It requires a +5 volt supply for proper operation. This supply is furnished on the board and is derived from the +15 volt supply line. The + and - 15 volt supply lines and all the necessary signal lines are linked between the PCB and the Display Assembly thru the 16 pin ribbon cables. The PCB is mechanically fastened to the left hand facing edge (as you look into the back of the display assembly) of the display chassis with two sheet metal screws. Trouble shooting procedures for the display electronics remains the same as before with the HI5045 electrically replacing the LF13331. The only additional consideration is the 5 volt regulator circuit on the PCB itself.

Resistors R130 and R230 820 Ohms on G-5040-A Display Board are removed and replaced with jumpers when this board is used.

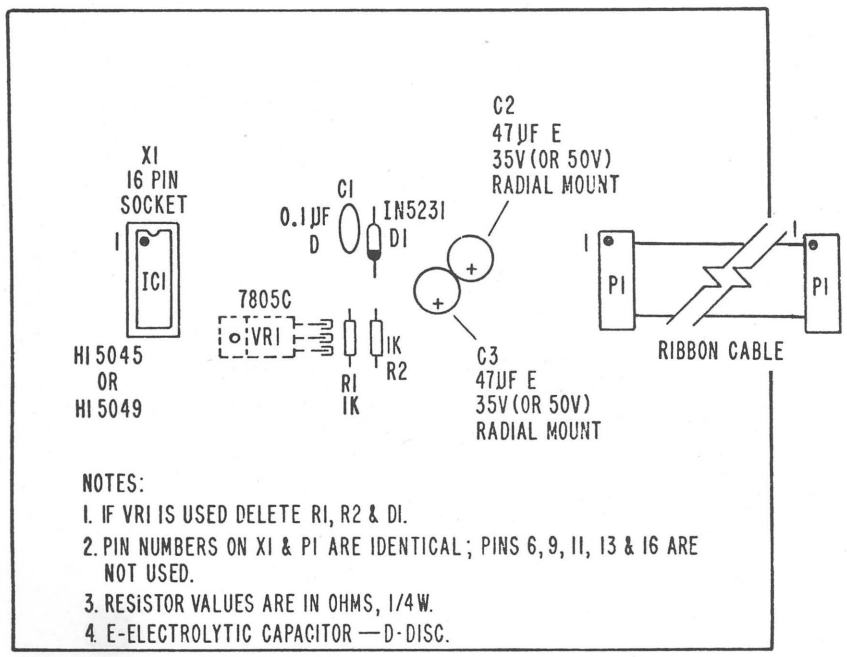

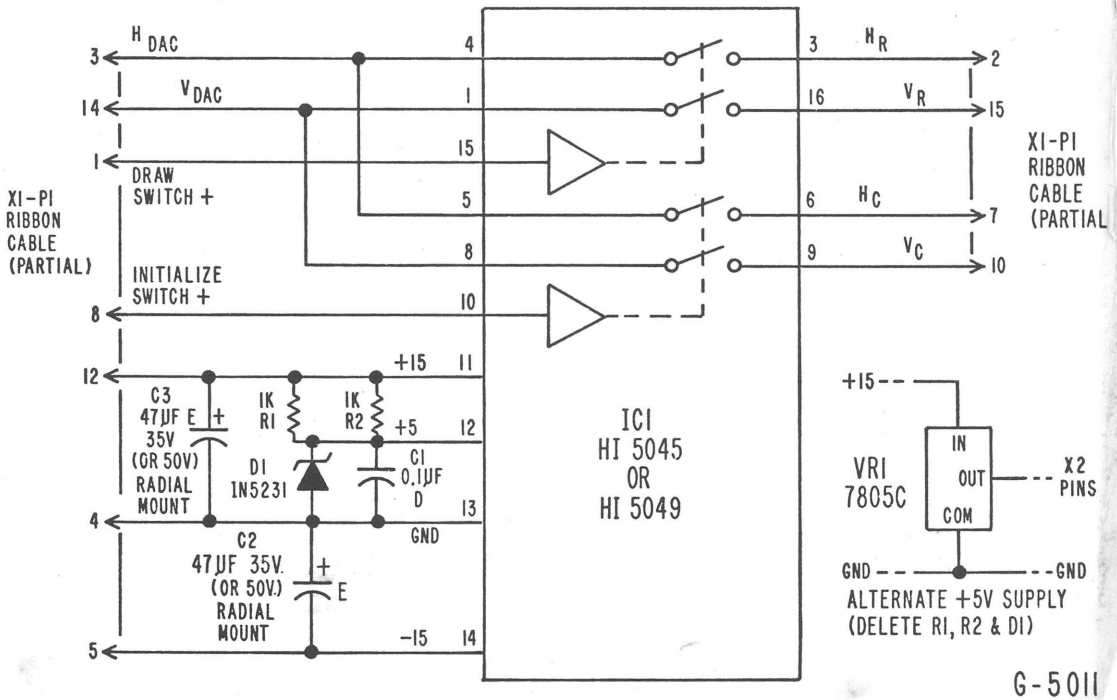

G-5011

TABLE OF CONTENTS

PART ONE
Information for Operators

Section	Title	Page
1	INTRODUCTION TO STAR CASTLE	1-1
2	RECEIVING AND INSTALLING STAR CASTLE	2-1
3	GENERAL INFORMATION AND PERIODIC MAINTENANCE	3-1
4	OPERATOR'S GUIDE TO TROUBLESHOOTING	4-1

PART TWO
Information for Technicians

Section	Title	Page
5	VECTOR THEORY	5-1
6	THEORY OF OPERATION	6-1
	Monitor	6-1
	CPU (Logic)	6-3
	Audio Board	6-9
7	TROUBLESHOOTING	7-1
9	PARTS LIST	9-1

APPENDIX A

Assembly Drawings, Schematics, Wiring Diagrams.

PART ONE

Information for Operators

SECTION 1

INTRODUCTION TO STAR CASTLE

INTRODUCTION

Star Castle is a one or two player outer space action game designed with features geared for maximum player appeal: a progressively difficult competitive level and a clearly defined "enemy" which must be both attacked and avoided at various points in the course of play.

GAME PLAY

The center of the playfield is occupied by the "Star Castle" which is programmed to constantly home in on the players' ships. Surrounding the "Star Castle" are three concentric "energy rings" of twelve segments each which serve as both a protective perimeter for the "Star Castle" and a source of points for the player. Contained within the "energy rings" are three protective "mines" which seek out the players' ships and destroy them upon collision. The movements of the "mines" are programmed to simulate the actions of heat-seeking missles.

The object of the games of "Star Castle" is to score the maximum number of points possible. This is accomplished by the combination of three elements: a) exploding the ring segments; b) exploding the "Star Castle"; and c) avoiding the Star Castle's mines. A player's turn is over when his ship has been destroyed. The number of ships per game is set by the operator.

Points are awarded as follows:

A. Hitting ring segments

1. outer ring - 10 points per segment
2. center ring - 20 points per segment
3. inner ring - 30 points per segment (note: it takes two "hits" to destroy a segment)

B. Hitting "Star Castle"

1. 1,440 points plus extra ship for each hit.

C. Avoiding "mines"

1. No points are awarded for shooting the "mines", but they must be avoided or shot to keep the game going.

For maximum scoring, a player will want to shoot out sections of the energy rings in order to give him a shot at the Star Castle in the center of the screen. As play progresses, there are two facts a player must keep in mind: 1) exploding all segments in a given ring will cause the entire ring to reappear - thereby eliminating a potential shot at the Star Castle in the center; and 2) exploding the rings in a manner that gives you a shot at the Star Castle will also give the Star Castle a shot at you. The Star Castle is programmed so that its nose always seeks out the player's ship. If there is a shot at the player, he will take it.

When the Star Castle is hit by a player's missile, it will first implode and then explode with all remaining ring segments. After a one-second delay, the Star Castle will reappear with all three ring segments. If the Star Castle shoots the player, his turn is over.

MODES OF PLAY

There are two modes of play in Star Castle: a) the one player mode; and b) the two player mode.

The one player mode is activated when a coin is accepted and the player pushes the one player button. As play begins, the Star Castle will appear in the center of the screen surrounded by its three "energy rings". The player's ship appears about halfway up on the right hand edge. By using the control buttons to move forward, right or left, the player maneuvers about the screen using the firing button to launch missiles.

Points are scored by destroying the energy ring segments or the Star Castle itself. Exploding the Star Castle gives an extra ship as well as points. No points are given for the "mines" that attack the player.

The player's ship can be destroyed in two ways: by collision with the mines or by a hit from the Star Castle's torpedo. The mines are launched from the rings and attack the player for approximately ten seconds or until shot. The Star Castle's torpedos are launched only when there is a clear shot at the player through all three rings. At this time the player also has his shot at the Star Castle. Both the Star Castle and the mines get smarter and faster as the game progresses.

The two player mode is activated when the coins are accepted and the two player button is pushed. Each player plays his turn until his ship is exploded. If a player scores more extra ships than his opponent, he will be allowed to play the extra ships even though his opponent's game is over.

The game of STAR CASTLE is not based on time units. The battle rages on until all the players' ships are destroyed. The length of the game depends solely on the skill of the player. It's the age-old challenge of man versus machine.

SECTION 2

RECEIVING AND INSTALLATING STAR CASTLE

RECEIVING INSPECTION

Your game was shipped in ready-to-play condition. However, after removal of the shipping carton, a brief visual examination is suggested.

Naturally, you'll want to make note of any physical damage to the game cabinet and its external components for freight claim purposes. Considering the quality of the shipping carton, any damage to the exterior would indicate possible interior damage as well.

The interior of the game should also undergo a brief examination for: loose mounting hardware (check to be sure that the major components are still securely mounted); disconnected or loose wires, cables or harnesses; electronic devices loose in their sockets; etc.

At this time the game serial number should be logged. Please remember that the game serial number will be required if you need service from your distributor.

ELECTRICAL REQUIREMENTS

Unless specified otherwise, your game was shipped to operate at 230VAC, 50/60 Hz. Two other voltage settings are possible. The power supply chassis has a table which shows the voltage options and fusing requirements.

A good earth ground is essential for the proper operation of this game or for that matter any electronic device. Problems with instability and erratic operation of computer-type devices can usually be traced to an ineffective ground system. Therefore, plug the game into a properly wired 3 prong outlet. If a 3 prong to 2 prong AC adaptor must be used, an alternate method of grounding the third prong must be used.

INITIAL ADJUSTMENTS

NOTE

When the game is connected to AC power, one of the game sounds may be heard. This is normal.

The audio level (volume) can be easily adjusted and THIS IS ACHIEVED BY ROTATION OF THE VOLUME POT LOCATED ON THE COIN DOOR. The audio level should compete with other machines "on the floor" to maximize play time.

Display brightness is another easy adjustment. The monitor assembly has several adjustments, but the brightness control is the only one which does not require a "screwdriver" for rotation. Keep the brightness at the correct level for appeal.

OPERATOR OPTIONS

The option switches allow you to select how many ships per game, how many coins per credit, and a test pattern for the Vectorbeam monitor. The option switch is located on the logic or game board. It is not necessary to remove the board from the cabinet to set the options. In fact, the option switch and audio control can be reached easily through the coin door opening. Table 2-1 will assist you with your selections:

TEST PATTERN

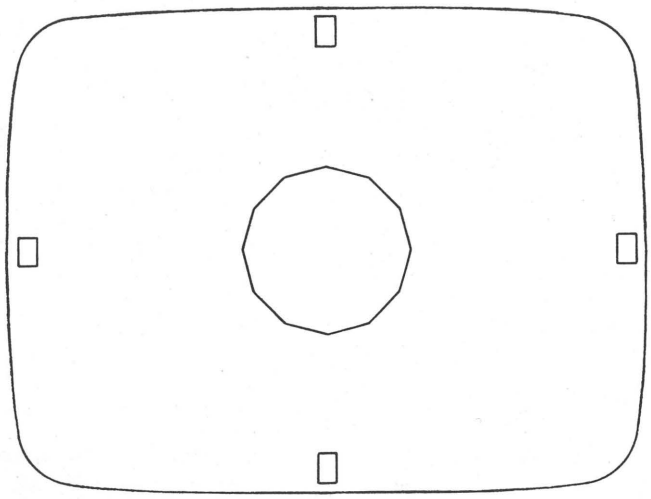

STAR CASTLE OPTION SWITCHES

(Located on logic board at position E-2)

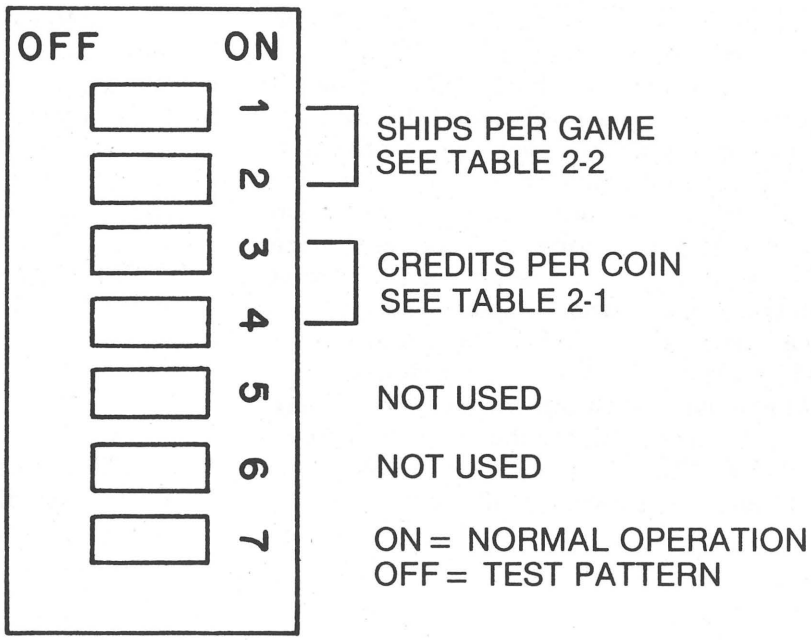

SWITCH 4	SWITCH 3	CREDITS / COIN
ON	ON	3/4
OFF	ON	3/2
ON	OFF	1/2
OFF	OFF	1/1

TABLE 2-1

SWITCH 2	SWITCH 1	SHIPS / GAME
ON	ON	6
OFF	ON	5
ON	OFF	4
OFF	OFF	3

TABLE 2-2

SECTION 3

GENERAL INFORMATION AND PERIODIC MAINTENANCE

Your game is designed much the same as conventional video games. The major exception is the use of an alternate means of visual display ... the patented Vectorbeam tm* monitoring system. However, the game is built of the same basic building blocks as any other video game.

The Power Supply provides all the necessary voltages for the CPU board, audio board, Vectorbeam monitor, and flourescent light. As you look in the back of the cabinet, it is located on the lower left side of the cabinet. The power supply has two circuit breakers, and a 3 ampere sloblo fuse. If one circuit breaker trips, the other breaker will soon follow. Always unplug the game before replacing the fuse or resetting the circuit breakers. If you need to replace the fuse use only a 3 amp. slo-blo fuse. The power supply also has a line voltage select switch that must be set to match the voltage in your area. There is also an adjustment for the +5 volt section. DO NOT ADJUST unless you use a volt meter and follow the procedure in Section 6.

The Central Processing Unit (CPU) is the "brain" of the game. As you look in the back of the cabinet it is the large PC (printed circuit) board on the right side. It "senses" when a coin is dropped in the coin slot, operates the coin meter, and gives credit. It then "reads" what is happening at the operator controls, interprets and computes to make the game play according to what buttons the player pushes. It tells the Vectorbeam monitor what to draw on the screen, and it tells the audio board when to make the appropriate sound effect. The CPU has a red LED (light-emitting diode), near the Molex power plug. This LED normally flashes once when power is turned on, then stays off. More on this in Section 6.

The Audio Board generates all the sound effects for the game and powers the loud-speaker. As you look in the back of the cabinet, it is the smaller PC board on the right side, just below the CPU.

The Vectorbeam tm* Monitor is the picture tube and associated "Monitor Board" and "Keltron". It draws pictures on the picture tube screen according to the instructions it receives from the CPU. If it does not receive correct data from the CPU, it will pop the circuit breakers. The only operator adjustment here is the brightness control (See Display P.C.B. Connectors and Adjustments, pg. A-18).

The Vectorbeam tm* Monitor is a completely different system from the standard raster-type monitor. Two advantages to this monitor are:

1. circuitry is simplified, and
2. ability to draw fine detail in the picture far surpasses conventional monitors, adding interest to the game.

If your monitor should need repair in the future, the technician should be familiar with the Vectorbeam monitor, because it is so different from the conventional raster system.

Interconnecting Cables are of 2 types: The Main Wiring Harness, and the Ribbon Connectors.

The Main Wiring Harness carries power from the power supply to the CPU, audio board, and monitor. It connects to each unit

through the Molex plugs. The Molex plugs are built so they can only plug in the right way. NEVER CONNECT OR DISCONNECT THE MOLEX POWER PLUGS UNLESS THE GAME IS UNPLUGGED.

The Ribbon Connectors carry data to and from the CPU. Since they can plug in two different ways, care should be taken to plug them in correctly. For the CPU, the ribbons are plugged in correctly if the ribbon is naturally directed away from the board (See Universal Bench Test Configuration, pg. 7-3). The ribbon at the monitor should also be directed away from the board. (See Universal Bench Test Configuration, pg. 7-3). The audio board is different: the ribbon should go up across the audio board. (See Universal Bench Test Configuration, pg. 7-3).

PERIODIC MAINTENANCE

The only Periodic Maintenance required is an occasional cleaning. The very high voltage used on the picture tube attracts dust that gradually degrades picture quality. To clean: unplug game and let sit for at least 5 minutes to let voltages "bleed-off."

The monitor is mounted in the cabinet on brackets. Remove the top bolt from each bracket and gently lower the monitor. Now you can clean the face of the picture tube, and the plexiglass cover. A mild solution of dish detergent will clean the plexiglass without harming the color decal. Care should be taken to not rub the decal, as it may be brittle with age.

SECTION 4

OPERATOR'S GUIDE TO TROUBLESHOOTING

or

How do I Figure out Which Board to Send Out for Repair?

O.K. - this is where we get technical on you - but don't panic! We'll keep this as simple as possible so you can figure out which board to send out for repair. For some of the steps in this section you will need a simple VOM, and know how to use it.

Here are two important procedures we will refer back to in this section:

Checking the LED :

Whenever there is a problem with the game, a good place to check first is the LED (light-emitting diode) on the CPU board near the Molex power plug. This LED indicates whether most of the CPU circuit is working. When everything works right, here's what happens: Power to the game is turned on, the LED flashes on, then stays off. If the LED is flickering or on continuously, there is a problem with the CPU or the +5 volt supply. Check +5 volts on the logic board (follow procedures in this section). If the +5 is O.K., have CPU repaired.

Checking the +5 Volt Supply:

To check the +5 volts, you need a voltmeter. Turn power on in the game. Notice on the upper corner of the logic board nearest you is a little pin marked gnd. This is a great place to put the negative probe of the voltmeter. Near this pin in position T13 (see CPU layout, pg. A-8) is a 20 pin IC marked 74LS377. Ignore the other numbers on this chip. We can measure the +5 volt supply at pin 20. Pin 20 is the bottom pin on the far side of the chip. Put your positive probe there, without touching any other pins, and you should get a reading. Anything between +4.8 volts and +5.1 volts is o.k., otherwise, adjust the voltage.

The adjustment is located on the power supply, and it is the only screwdriver adjustment on the power supply. Adjust slowly WHILE READING THE VOLTAGE. Too much voltage will destroy IC's fast. If voltage cannot be adjusted into the correct range (+4.8- +5.1 volts), repair power supply.

The following is a guide compiled from experience. It cannot be right 100% of the time:

SYMPTOM	WHAT TO DO
Circuit breakers trip	1. Unplug game. Unplug Molex power plug from monitor and reset breakers. Turn POWER ON. If breakers trip: POWER OFF, see 2. If breakers don't trip: Coin-up game and "play" it. Are all sound effects normal? Yes - repair monitor. No - Problem is probably in CPU or power supply. Check LED on CPU. Check +5 volts on CPU (see procedure) If +5 volts is good, repair CPU. 2. Unplug Molex power connector from audio board, reset breakers and turn POWER ON. If breakers trip: Problem is in coin meter circuit. If breakers don't trip: Repair audio board. POWER OFF, reconnect molex plug to monitor. Turn power on to see if there is a good picture. If the picture is bad, problem is probably in the monitor. If breakers trip: Check LED and +5 volt supply. If LED and +5 volts is O.K., problem is probably in monitor.

PART TWO

Information for Technicians

SECTION 5

VECTOR THEORY

In order to understand the basic concept behind a vector generated display, it is important to have a basic knowledge of vector theory.

In the vector display system, there are no horizontal and vertical lines (no sweep) or sync. A line generated using a vector system is shown in Figure 5-1.

A line is drawn by programming a beginning and ending point of the line to be drawn, and forcing the cathode beam to travel between these two points, illuminating the entire path on the screen of the CRT. The angle of the line, the position of the line, and the length of the line are determined simultaneously, and simply, by selecting the proper voltage levels for the beginning and ending points of the line.

This is accomplished by the two twelve-bit codes (words) applied to the DAC-80s on the display board. The DAC-80 will produce a different voltage level at its output for each possible combination of input bits (of which there are 4096 possibilities for a 12 bit word.)

It is also important to remember the function of the LF 13331 analog switch and its output RC network. Because we are dealing with reactive components in C101 and C201 on the display board the charging voltages found are non-linear by nature. (See figure 5-2).

Therefore, when a line appears on the CRT, it is actually only part of the entire path taken between the beginning and ending points of the vector (C-D). The section of A-B is chosen as the most linear portion of the charge curve, and is illuminated.

Sections C-A and B-D are blanked at the cathode and section A-B illuminated by controlling IC7 (7406) on the display board. These calculations are all performed on the CPU logic board.

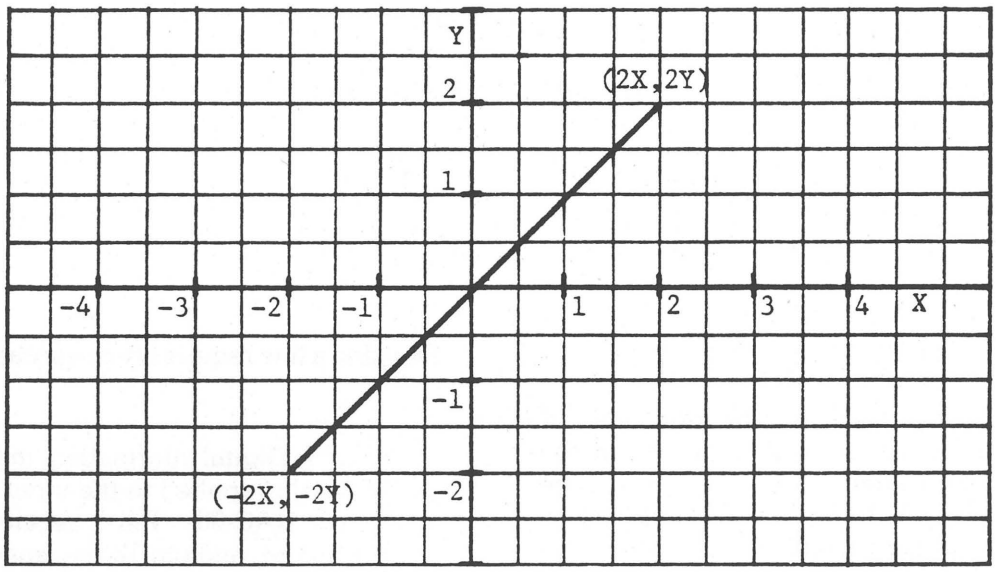

Figure 5-1. Line using Vector System

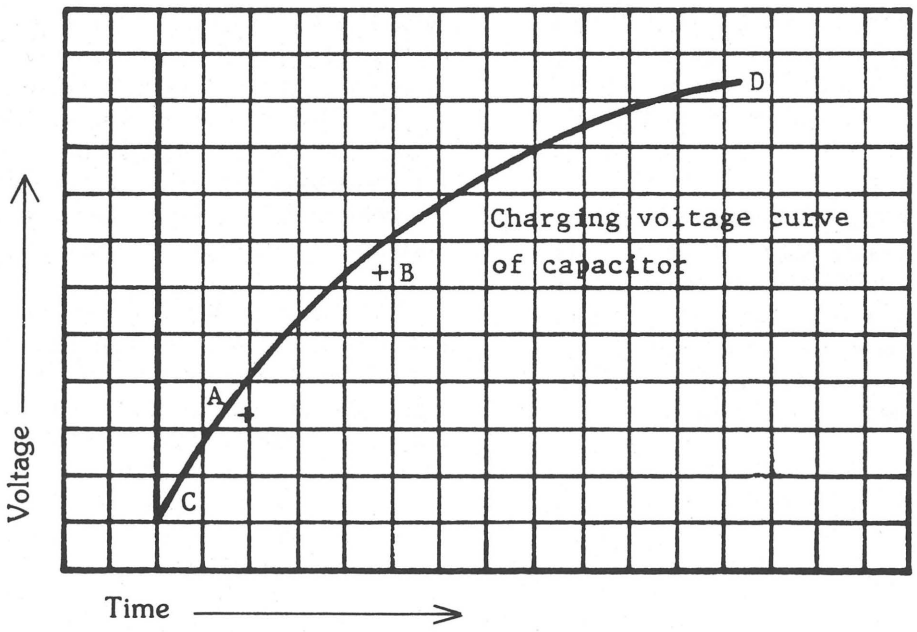

Figure 5-2. Non-linear Charging Voltages

When a line appears on the CRT, it is actually only part (section A-B), of the entire path taken between the beginning and ending points of the vector (section C-D). Section A-B is chosen as the most linear portion of the charge curve, and illuminated.

SECTION 6

THEORY OF OPERATION

GENERAL DESCRIPTION

This section describes the principles of operation of the major circuit functions of the Video Arcade Game. The system's general functional description is followed by detailed circuit schematics which are included as Appendix A. The schematics used in this manual are similar in nature to those used by most industrial electronic firms.

MONITOR

The Vectorbeam tm* Monitor is unlike the conventional TV monitor in that it displays vectors (lines) generated from X-Y coordinates received from the logic board. The horizontal points are X (width) and the vertical points are Y (height). The X and Y logic signals originate from the logic board.

The Vectorbeam tm* Monitor circuitry is so different from a raster scan monitor, it is useless to try to troubleshoot it using raster T.V. theory. The Vectorbeam tm* Monitor has no horizontal oscillator, no vertical oscillator, no AFC, no sync circuits, and no video amplifiers. How, then, does it work?

The Vectorbeam tm* Monitor can be divided into 4 main sections: voltage regulators; deflection circuits; video high voltage module; and brightness circuit (cathode drive).

There are three voltage regulators on the monitor board: +15v, -15v, +5v. Note that these are IC's, not transistors. The plus and minus 15 volt regulators supply both DAC-80's, the LF13331 analog switch, and the TL081 op amps. The +5 volt regulator supplies both DAC-80's and the 7406 (IC7). It takes little time and is well worthwhile to check all 3 regulator outputs every time the monitor is serviced.

Drawing a line requires two separate steps.

STEP 1. Digital information, in the form of a 12 bit word is applied to the input (pins 1 thru 12) of the DAC-80. Pin 1 receives the most significant bit, and pin 12 the least significant. The DAC-80 converts the digital word into an analog voltage which is outputted on pin 15. This voltage can swing between ± 5 volts, depending on the input word. The output of pin 15 then goes through a current limiting resistor R130 to the inputs of the analog switch IC1. (Pin 18 of the DAC-80 is an input for feedback). Now the CPU sends out an Initial Position pulse, closing the appropriate ''switch'' (actually a J-FET), to let the analog voltage out pin 10. C101 charges up immediately, and the analog voltage is amplified by IC 102 and the transistorized section Q101 thru Q111, causing the yoke to deflect the cathode beam to where we want the line to begin - the Initial Position.

STEP 2. Another 12 bit word is fed into the DAC-80. This word determines where the end of the line we are drawing will be. The DAC-80 again converts the digital word into an analog voltage that goes out pin 15 and into the analog switch IC1. Now the CPU sends out a Line Drawing pulse, closing the appropriate ''switch'' to let the analog voltage out pin 15 of IC1. The combination of R103, R102, and C101 has a time constant that determines how quickly C101 can charge (or discharge) to the new analog voltage on pin 15 of IC1. By adjusting R102, we change the amount of time it takes for C101 to arrive at the new analog voltage on pin 15 of IC1. Thus R102 determines the line length in the vertical (Y) direction. If the second (Line Drawing) analog voltage (IC1 pin 15) is greater than the first (Initial Position), the line will be drawn downward. If the second voltage is smaller, the line will be drawn upward.

In the horizontal channel, if the second analog voltage is greater than the first, the line will be drawn to the left.

Op-amp IC102 serves a dual purpose: It acts as a buffer between the deflection amplifiers and the analog switch, as well as an "edge gain" amplifier.

At the output of IC102, there is a resistor diode network consisting of R105 to R110, and D101 to D104. This resistor diode network is used to compensate for the non-linear characteristics of the CRT near the edges of the screen. If this circuit were not used, any object displayed on the screen would increase in size as it moved closer to the edges of the screen. Potentionmeter R109 adjusts the height of the pictures.

From the wiper of R109, the signal proceedes to Q101, which is the first stage of deflection amplification. Q101 to Q111 form a typical modern direct-coupled power amplifier with differential pair input and full complementary output. The differential pair consists of Q101 and Q103. The base of Q103 is tied to the amplifier output through the yoke and R117, forming a negative feedback loop. Q101 and Q103 (differential pair) compare input signal and amplifier output, and correct for any differences caused by amplifier distortion and the reactance of the yoke. Q102 is the constant current source for the differential pair (Q101, Q103). Bias for Q102 must be kept steady so Q102 collector current is constant. D105, D106 and R113 accomplish biasing. Note D105, D106 are in parallel with the base - emitter junction of Q102 and R113. The voltage across Q102 B-E junction plus voltage across R113 will equal total voltage across D105, D106, and the two forward biased diodes determine this voltage at 1.2 volts. Since the voltage across the B-E junction of Q102 is 0.6 volts, that leaves 0.6 volts across R113. The voltage across R113 is held constant, so the current through it is constant ($I = E \div R$) at 3 ma. Thus Q102 collector current is held constant near 3 ma.

The output of the differential pair (Q101, Q103) is fed into the base of Q104. Q104 is a class A amplifier whose output feeds Q208 and Q209.

Q105 is another constant current source. D109, D110, D111 determine the bias current in Q108, Q109, Q110, Q111.

So the deflection signal has traveled to the base of Q108 and Q109, the driver transistors. If the signal happens to swing positive Q108 will turn on, turning on Q110 which drives current thru the yoke and deflects the electron beam down. If the signal swings negative, Q108 and Q110 turn off, Q109 and Q111 turn on, and the beam deflects upward.

If the signal amplitude is excessive Q110 or Q111 (also known as the output transistors) will conduct heavily. The excessive current will cause voltage to develop across R120 or R121, and Q106 or Q107 will turn on. When this happens, the signal is removed from the base of Q108, Q109. Q108 and Q110 or Q109 and Q111 are turned off by this action and are protected from burning up. So Q106 and Q107 are protection transistors, and during normal operation they are inactive.

Note that Q108, Q110 control deflection in the lower half of the CRT screen, while Q109, Q111 take care of the top half. In the horizontal (X) channel Q208, Q210 control the left half; Q209, Q211 control the right.

Because the amplifier is a direct coupled loop, it defies ordinary signal tracing as a means of troubleshooting. If the signal is wrong anywhere in the amplifier, it will be wrong throughout.

R122, R123, and C102 form a RC network, which compensates for any counter EMF that may develop by the expanding and collapsing of the deflection coil's electromagnetic field.

The video high voltage module operates off the +25v supply and generates three different voltages for three circuits. It generates 16KV for the CRT ultor voltage. It generates +400vdc for the CRT focus voltage. And it generates +90 volts for blanking the cathode. The +90v is well filtered and fed into the brightness circuit on one end of R111.

The brightness circuit controls the amount of current going from the CRT cathode to the phosphor screen. It does this by varying the voltage on the CRT cathode. It also incorporates protection circuitry to protect the phosphors from burns. The main components in the brightness circuit are IC7, Q1, Q2, Q3, Q6, Q7, Q8, and R111, the brightness control. There are only two levels of brightness used in this system, which I will refer to as Normal and HI. The brightness information comes from the 74LS32 in position J2 on the logic board, through the ribbon connector, and into IC7. Normal intensity data enters IC7-1, and HI intensity data enters IC7-3.

Normal intensity data then goes out IC7-2 and turns Q1 on-off. Q1 acts as an on-off switch connecting and disconnecting R7 to ground (thru Q2). Thus, when Q1 turns on, the CRT cathode voltage is lowered (assuming R111 is at a normal setting) and the beam is turned on. When Q1 turns off, CRT cathode voltage returns to +90 volts, and the beam is cut - off (no brightness on screen).

Hi intensity data goes out IC7-4 and turns Q3 on-off. Q3 collector is connected to R8 (10K) in parallel with R9 (2.2K), R10 (5.6K). When Q3 turns on there is a lower resistance path between CRT cathode and ground than there was when Q1 turned on. Thus CRT cathode voltage drops to a lower voltage, and more current flows to the phosphor screen, creating a higher brightness.

Note that when either Q1 or Q3 conducts, the only path to ground is through Q2. If Q2 is off, the CRT cathode voltage cannot change, and no picture can appear. This means Q2 is a master ON-OFF switch for the cathode beam, and is the means through which our protection circuits can turn the beam OFF.

The first protection circuit consists simply of an unfiltered full-wave rectified +25 volts from the power supply. This voltage is slightly filtered by C10 and fed through R6 to Q2, turning it on. When the game is unplugged, the +25 unfiltered dies immediately and the beam is cut off, preventing a bright spot on the screen.

The second protection circuit consists of Q6, Q7, and two sections of IC7. Part of this circuit turns off the beam if the -25 volts from the power supply is lost (breaker trips, or?). In the absence of -25 volts, IC7-9 goes high (pulled up via R20), and IC7-8 goes low, pulling the base of Q2 to ground and Q2 turns off.

The other part of the circuit protects against having the beam on too long (in case of CPU failure, etc.). The high going pulses coming out of IC7-2,4 that turn on Q1, Q3 also turn on Q6 via R22, R23. Q6 amplifies and inverts these pulses to high-going low. Pulses then go through another inverter, so at IC7-10 they are low going high (active high). The active highs here correspond to the times when the beam is on, and charge up C24. If the beam is on too long, C24 will charge up enough to turn on Q7, making Q7 collector and Q2 base go low and Q2 turns off. In normal operation C24 can discharge through IC7-10 when IC7-10 goes low.

Now, a paragraph about Q8. Q8 is the path through which IC7-2,4 receives its operating +5 volts. R19 and C23 form a time delay, so when power is first turned on it takes a while before Q8 turns on and +5 volts gets to IC7-2,4. Thus, all other circuits get a chance to stabilize before the beam is turned on.

R111 is the brightness potentiometer, which adjusts the amplitude of the negative pulses used for Normal and HI brightness.

CPU BOARD (Logic)

The processor hardware can be broken down into five basic functional blocks as shown in Figure 6-1. The arrows indicate the possible data flow directions between the various blocks. The ALU and Control block are the main components of the processor while the Memory and I/O blocks may be thought of as merely peripherals. Figure 6-2 is a detailed block diagram of the processor. The numbers in each block correspond to the entries in Table 6-1, which lists the IC numbers of the main components of each functional block.

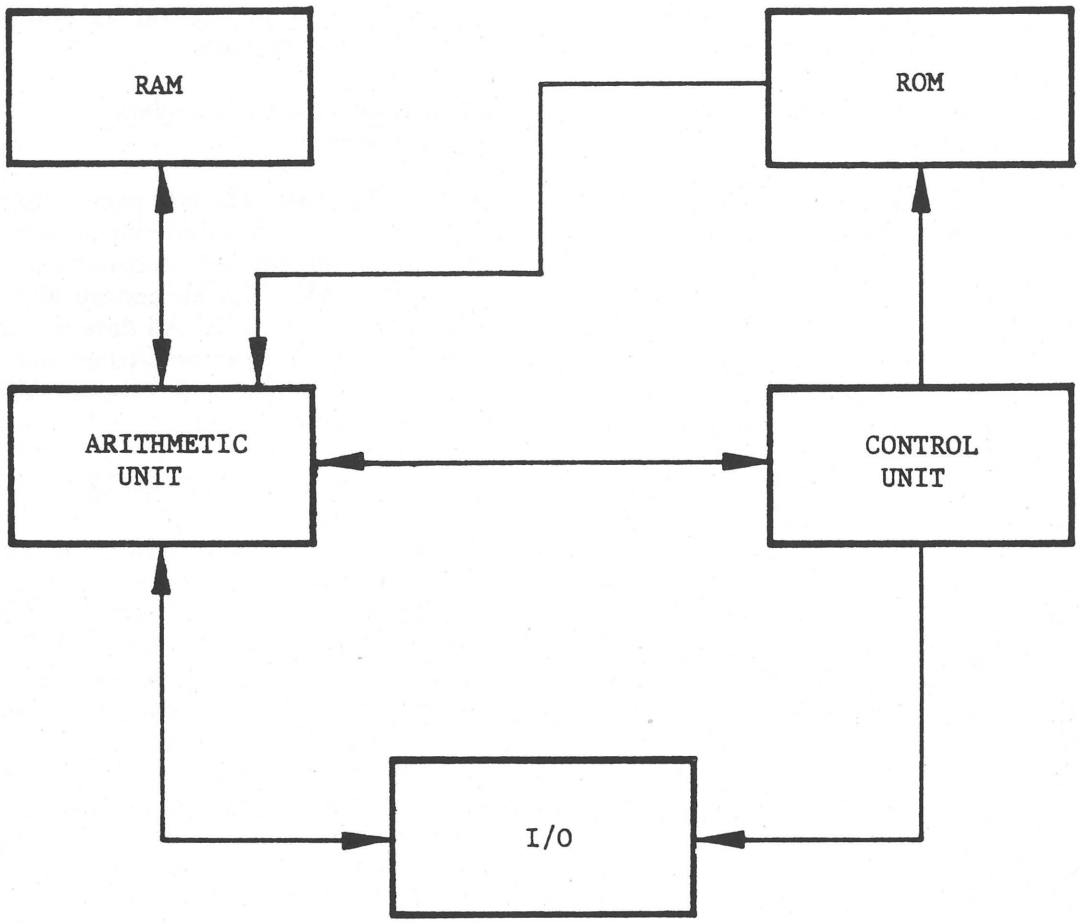

Figure 6-1. CPU Functional Block Diagram

The following is a brief description of each block shown in Figure 6-1. The numbers beside each functional block name are the numbers in Figure 6-2 which correspond to a particular function.

RAM (6)

The RAM is implemented with three read/write static memories configured as a 256 x 12 bit block. Data can be transferred to or from this memory via the ALU block. The processor uses this RAM as a scratch pad.

ROM (10)

The ROM is configured as an 8K x 8 bit block of memory. These memory locations contain the program instructions and/or data. It is accessed via the processor control unit.

I/O 19, 17, 18

The I/O block consists of 8 output lines implemented with a bit addressable latch, 24 input lines implemented with data selectors, and two 12 bit registers which are connected to the X Y display deflection circuits via D/A convertors.

Arithmetic Unit 1,2,3,4,5

The arithmetic unit performs all the arithmetic processing for the system. It consists primarily of two 12 bit accumulators, an arithmetic logic unit and various data selectors. The accumulators can function as temporary storage registers for arithmetic functions upon the data in the accumulators. The data selectors are used to select the various sources of data which will be processed.

Control Unit (15,16,14,7,8,9,11,12,13)

The control unit is the heart of the processor. It performs all instruction decoding operations and generates all the necessary control signals which the rest of the hardware requires to function correctly.

The following is a discussion of each block shown in Figure 6-2.

1. Accumulator Selector

The accumulator selector consists of 3 quad data selectors. They are used to select the output of either the primary or secondary accumulator for processing by various other sections of the systems.

2 & 3 Primary and Secondary Accumulators

The two 12 bit accumulators are implemented with quad bidirectional shift registers. The primary accumulator consists of S4, P4, M4. The secondary accumulator consists of T4, R4, N4. All data manipulation in the processor is accomplished using these two accumulators. All output data flows through these registers.

4. Arithmetic Logic Unit (ALU)

The ALU is used to perform all necessary arithmetic functions within the processor. The ALU is implemented using three 24LS181 (N6M6L6) function generators, three 74LS85 (N9,M9,L9) 4 bit magnitude comparators, and a 74S182 (L4) look ahead carry generator. The data which the ALU manipulates can come from four different sources. The first source is the contents of the accumulators via the accumulator selector. The second and third sources are the ROM and RAM data outputs via the ALU data selector (N11, M11, L11) and the fourth source is the external input selector (E4, D4, C4).

5. Data Selector

The data selector is used to read data into the ALU from either the RAM or ROM memory. Note that the ROM data is only 8 bits wide while the RAM data is 12 bits wide.

6. RAM Storage

The system RAM consists of three 9101C high speed static memory chips connected as a 256 x 12 bit block. The block is 12 bits wide in order to allow the contents of an accumulator to be stored. The processor uses the RAM as temporary storage of program variables, data pointers or any other data of a dynamic nature.

7. RAM Address Selector/Register

The output of this register is tied directly to the address lines of the RAM. It consists of a multiplexer which routes address data from either the ROM or RAM locations to the RAM address lines. The capability to use RAM data to select RAM addresses is the basis for the indirect addressing mode of the processor.

8. Page Selector

The page selector is used to latch the high order 4 bits of a RAM access instructions.

9. ROM Data Register

The register is used to temporarily hold data from the ROM during an instruction fetch.

10. ROM Memory

The ROM memory consists of the actual memory chips plus a data selector and latch circuit. The latch is used to improve the memory access time during a two byte instruction fetch by allowing one byte of the instruction to be latched while the RAM address lines are decoded for the other byte. The data selector can then be used to rapidly access both bytes of the instruction by switching between the latch and memory outputs.

11. Instruction Register

The instruction register is a latch which holds the current op code as read from ROM. Its output is tied to the instruction decode circuitry which in turn generates the necessary signals to execute the instruction.

12. System Sequencer

The system sequencer is used to decode an instruction op code and to generate the appropriate timed sequence of signals which execute the instruction. The op code is decoded by using it as the address data to a set of decoder ROMS. The outputs of the decoder ROMS are then synchronized with the system clock and used to control the various system functional blocks.

13. Line Length Counter

The line length counter is used during the process of drawing a vector to control the length of a vector, by turning off the beam at a pre-determined time after the vector is intiated. The counter is loaded with a value from a line length ROM and then counts up until it overflows which in turn generates a signal to indicate the vector has been finished.

14. Program Address Selector

This selector is used to provide the address data to the program ROM. It selects either the program address counter output or the accumulator selector output and routes this data to the ROM address lines. The ability to use the accumulator contents as address data allows the program to randomly access data tables stored in the ROM or to compute a branch address after a conditional test.

15. Program Address Counter

This is a 12 bit counter whose output defines the next location in ROM to be accessed. It is normally clocked sequentially to step through a program. However, it can be loaded with data from the program address register which is how the jump instructions are implemented.

16. Program Address-Register

This register is a latch used for temporary storage of an address which will be loaded into the program counter during a jump instruction. The input data to this latch can come from either the program ROM or the scratch-pad RAM.

17. Input Selector

The input selector is used to read the state of one of the 24 input lines into the selected accumulator. There are 16 primary inputs and 8 secondary inputs. During an input instruction the upper 11 bits of the accumulator are set to zero while the least significant bit reflects the state of the input line. All input lines have pull up resistors on them so that they will read high if they are left unconnected.

18. Output Selector

The output selector is a bit addressable latch used to control the 8 output lines. During an output instruction the selected output line is set to the complement of the least significant bit of the accumulator. The output lines are used to control the audio board, display intensity and the mechanical coin counter.

19. Display Registers

The display registers are the interface between the processor and the display driver circuits. These registers are latches into which the contents of the accumulators can be stored. The outputs are tied to D/A converters which provide the input voltage to the display deflection amplifiers.

TABLE 6-1. BLOCK NUMBERS AND COMPONENT I.C.

1. T-2, R-2, N-2
2. S-4, P-4, M-4
3. T-4, R-4, N-4
4. N-6, M-6, L-6, N-9, M-9, L-9
5. N-11, M-11, L-11
6. N-14, M-14, L-14
7. J-12, I-12
8. H-12
9. S-13
10. U-7, R-7, T-7, P-7, U-9, T-9, U-11, T-11
11. T-13
12. A-8, G-10, F-10, G-14, F-14, E-14, D-14, C-14
13. E-6, D-6, E-8, H-8, G-8, F-8
14. S-9, R-9, P-9
15. S-11, R-11, P-11
16. P-13, R-13
17. E-4, D-4, C-4
18. F-2
19. S-2, R-2, M-2

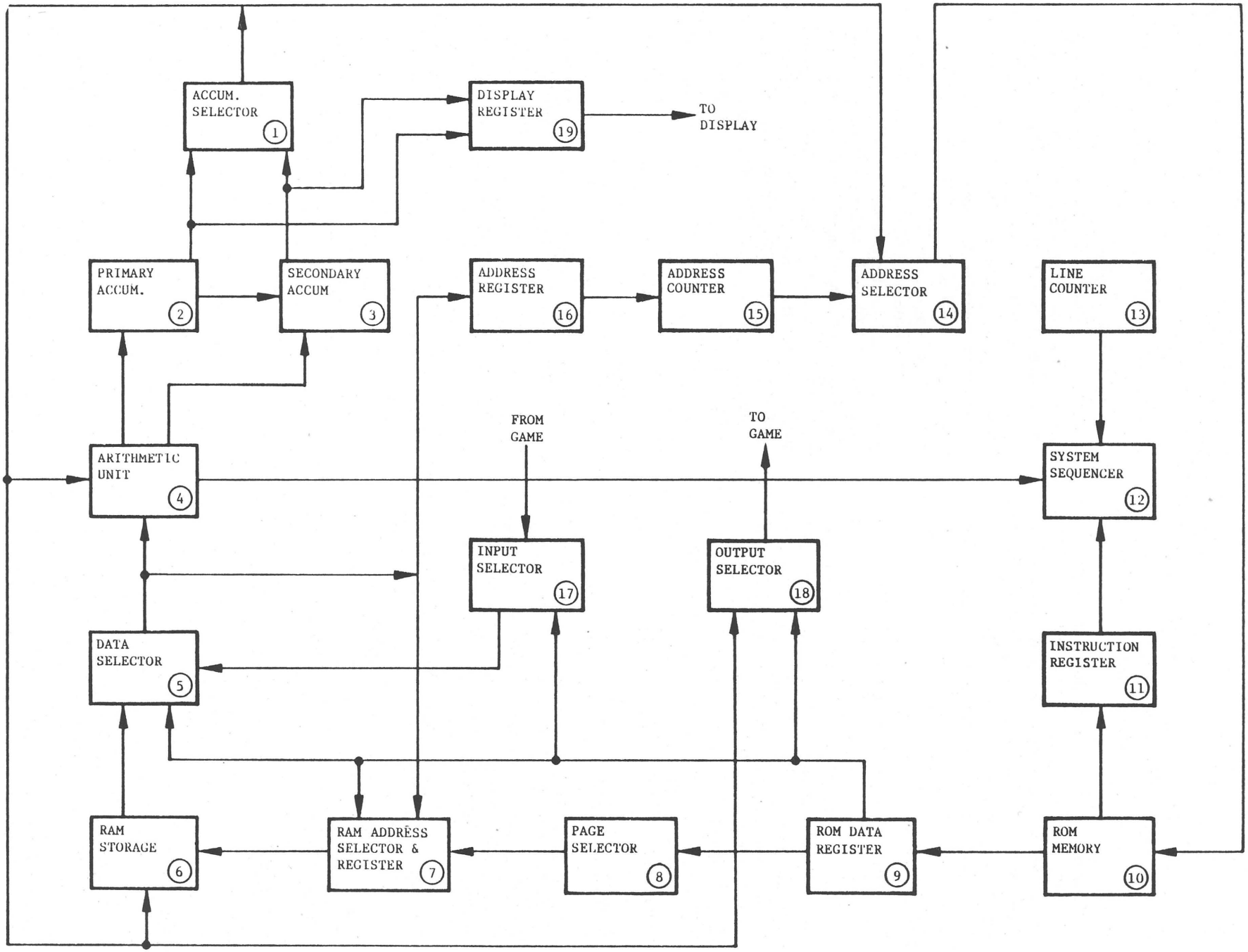

Figure 6-2. Detailed Block Diagram

AUDIO BOARD

BACKGROUND SOUND

(refer to block diagram 4)

The background sound circuit is composed of eight main elements. They are the DAC (ditital to analog converter), low pass filter, level shifter and limiter network, VCO (voltage controlled oscillator), Peak-Peak to TTL Converter, a divide by 126 circuit, a divide by 128 circuit, and Summing Network. (ref blk. 1).

DIGITAL TO ANALOG CONVERTER (DAC)

Output ports 6Q, 7Q, & 8Q of IC3 drive digitial to analog conversion circuitry consisting of IC6, IC7, D5, and R2 to R9. The circuit converts the various combinations of highs and lows on IC3-15, 16 and 19 into an analog voltage level at the output of IC7. This voltage then drives circuitry to produce a background sound of decreasing frequency as the level of IC7-6 goes more negative.

LOW PASS FILTER (LPF)

The Low Pass Filter which receives it's input from the DAC, is composed of R10 to R13, C11, and IC8. This filter has a very long time constant and requires approximately ten seconds to ''settle out''.

LEVEL SHIFTER & LIMITER NETWORK

The Level Shifter and Limiter Network, composed of R14, R15, R17, R18, and D6, limits the voltage swing at the input of the VCO (IC9-5) between -1 vdc and -3.9 vdc.

VOLTAGE CONTROLLED OSCILLATOR (VCO)

The VCO is composed of C12, C13, R16 and IC9. The output of the VCO chip is a squarewave whose frequency is proportional to the input voltage at IC9-5. The output of the VCO is fed to the dividers via the PEAK-PEAK to TTL Converter, which is composed of C14, D7, D8, R19 to R21 and Q1. This circuit will convert a squarewave that switches between any two levels at least five volts apart, to a TTL compatable signal, in this case, CLK+.

DIVIDER CIRCUITS

The CLK+ signal is fed to two division circuits. The first is composed of IC10, IC11, half of IC12, one sixth of IC6, and half of IC28 that form a divide by 126 circuit. The second is composed of IC13 which is a divide by 128 circuit. The signal appearing at IC11-15 is a very narrow positive pulse one-sixtythird the frequency of CLK+. IC28 is a ''glitch catcher''. It's output IC28-2 is a negative going pulse approximately half as wide as IC11-15, and is used to both preset the counters (IC10-9, IC11-9) and feed the divide by two counters (IC12) whose output is a squarewave. IC13 is configured as a simple binary counter whose output frequency (IC13-9) is equal to CLK+ divided by 128. Both counters are enabeled ''low'' at IC3-12. The outputs of both dividers are fed to the Pot Driver (IC27-2) via a Summing Network consisting of R24, R25, R26 and C15.

TEST PROCEDURE

Trouble Shooting the Background sound is broken into two main parts. First verify the operation of DAC, Low Pass Filter, Limiter Network, VCO and PEAK-PEAK to TTL Converter. PROCEDURE: Load all ''ones'' into the output latch IC3, (see input control circuit). This yields a code of 111 at the input to the DAC (IC6-9, 11, 13). This chip is used as a simple switch as illustrated in figure 1. When a logic O or low is placed on the input, the 7406 ''switch'' is open and sinks no current. Placing a high on the input closes the switch and connects the output to ground.

TABLE 1

IC6-9-11-13	IC7-6	IC8-6	IC9-5	IC9-3
1 1 1	- OV	-7.6V	-3.2V	23kHz
1 1 O	-IV	-6V	-3V	20kHz
1 O 1	-2V	-5V	-2.6V	18kHz
O 1 1	-4V	-3V	-2V	14kHz

Now using Table 1 voltage and frequency checks can made on the DAC, Low Pass Filter, and VCO. The emitter of Q1 will vary between 0 and -0.7 volts, the signal on the collector of Q1 swings between 0 and +5 volts and has the same frequency as the VCO output. Also the signal to the base of Q1 should not "go below" -0.7 volts. If it does D7 is open. The squarewave VCO output (IC9-3) must have a minimum P-P reading of 5 volts. The rest of the codes in Table 1. can be generated by grounding IC6-9, 11, 13 one at a time with a clip lead. To generate the all 'zeroes' code use three leads or load all 'zeroes' into the output latch (IC3).

Secondly, to check out the Digitial portion of the Background Sound the following procedure is utilized. Load all 'highs' into the output latch. This should turn off the Background Sound by disabling the counters (IC10-1, IC11-1 and IC13-2). Now using a logic probe or scope verify that the signal CLK+ exists at the inputs of the counters (IC10-2, IC11-2, IC13-1, IC28-12) and check for a 'low' at IC10-1, IC11-1, and a high at IC13-6. The next major step is to check for all 'lows' on the following outputs (IC10-11 thru 15, IC11-11 thru 15 and IC13-6). The following outputs can be either 'high' or 'low' but must not be clocking (IC12-8 thru 11 and IC13-8 thru 11). IC28-2 should be 'high'.

To troubleshoot the divide by 63 circuit use a clip lead and ground IC6-1. A high should appear at IC6-2 and it's associated inputs. Now ground IC28-2, the data at inputs A thru D (IC10-11 thru 14 and IC11-11 thru 14) will be transferred to their respective outputs, A to QA, and so forth. The CO pins should both be 'low', this test proves that the counters are being preset with the correct data. If all 'lows' are found on the inputs wired to HI+ jumpers (W14, 15) can be used for fault isolation. Next cut jumper W13 and move the ground from IC28-2 to IC28-1. This removes the load signal (IC10, 11-9) and allows these two chips to act as an eight stage binary counter. The carry output at IC10-15 will be a narrow pulse equal to the input frequency divided 256. To check IC12 remove the ground from IC6-3 and install W13. A frequency division by two should be observed from pin 13 to pin 11. IC13 is configured as a binary counter whose final output pin 9 is the frequency at the input, pin 1 divided by 128. Follow the procedure for checking binary counters given above.

NOISE GENERATOR

The noise generator circuitry is composed of IC14, a digitial noise generator, a DC blocking network C18 and R28, and a voltage follower, IC15. Both outputs have a minimum amplitude of 11.5 V p-p, with the waveform at IC15-6 centered about ground.

TEST PROCEDURE

Check for proper amplitude signal at outputs (IC14-3 and IC15-6). IC15-6 will read approximately 2.5V RMS or 11.5 V p-p.

SOFT EXPLOSION
(refer to block diagram 2)

The basic componenets of this circuit are white noise from the noise generator, a low pass filter, a current controlled amplifier (CCA), an envelope control circuit, and a voltage switch.

LOW PASS FILTER

The output of the noise generator circuit is fed into the low pass filter, R58, R59, R60, and C28, C29. The filter output is then fed into the CCA IC18-2, 3.

CURRENT CONTROLLED AMPLIFIER (CCA)

IC18 can be imagined as an amplifier that generates a current waveform characteristic of the voltage appearing at pin 2. The strength or gain of the output current (IC18-6) is proportional to the current injected into pin 5 via R57 (refer to Figure 2).

ENVELOPE CONTROL

R57 controls the amount of current injected into pin 5 of the amp and the RC time constant of R57 and C27 determines the envelope or decay time of the output waveform.

VOLTAGE SWITCH

The circuit is turned on by switching a low level on the base of Q6. This pulls the voltage up on the emitter of Q7 from -3.5v to +1.9v forward biasing Q7 and allowing it to inject current into the CCA.

TEST PROCEDURE

With J4 disconnected from the CPU board load all 'ones' into the output latch (IC3) and kill the star sound (refer to input control circuitry). The junction of R52 and R53 will read about 5vdc, grounding this point should cause the collector of Q6 to swing from -3.5v to almost 2v, the emitter of Q6 should remain at a constant 2.2vdc. The upward voltage swing on the collector of Q6 should turn on Q7 and cause it's collector to rise from about -14.3 to about 1.6vdc. If, for any reason the voltage switch circuit is suspect, it may be eliminated by cutting W1 and tapping a grounded test lead to the square pad of W1. In either case a roar should be heard in the speaker, if this is not the case, verify that the noise generator is functional and that the soft explosion circuit is receiving noise at R58. If any of the following sounds work, (see quick check procedure) loud explosion, fireball, shield or thrust, replace IC18. If none of the above operate, perform a check of the voltage follower circuit (see voltage follower). If the voltage follower is operating correctly, one of the other CA3080's may be shorted. To isolate any of the CA3080's whose outputs feed the voltage follower, you may cut their related jumper (W6 thru W10) and use a test lead to connect the output of the CA3080 to the input of the voltage follower circuit (W11 square pad. Don't forget to exercise the appropriate sound. Using the above procedure the offending CA3080(s) can be located easily.

VOLTAGE FOLLOWER

R127 converts the total current output of all the CA3080's to a voltage. Since this is a high impedance point IC26 is used to "beef up" the signal on the top of R127, before feeding it to the pot driver (IC27).

TEST PROCEDURE

If any of the following, soft or loud explosion, fireball, shield or thrust sounds, work it's pretty much a safe bet that IC26 is o.k., however if none of the above sounds work the test procedure is as follows: cut W11 and apply a known good signal to W11, the square end, say NOISE from IC15-6 or 60HZ from IC16-3 and observe the output (IC26-6). If the input control latch is set-up properly, so that no sounds are on, the NOISE or 60Hz signal will be heard in the speaker.

LOUD EXPLOSION
(refer to block diagram 2)

The loud explosion is heard whenever the player ship or the center cannon is destroyed. The technical description is identical to that of the soft explosion. The differences between the two circuits are different component values in the low pass filter and envelope control circuitry, these are for a different frequency response, amplitude, and decay time.

TEST PROCEDURE

See test procedure for soft explosion.

SHIP THRUST SOUND
(refer to block diagram 2)

The ship thrust sound is heard whenever the thrust button is depressed on the player control panel. For a technical description see the technical description on the soft explosion circuit. The differences between the two circuits are different part values in the low pass filter and envelope control circuitry. There is also an additional resistor R36, which is used to give the circuit a slower attack. You will also notice that the emitter of Q15 is tied to +5 instead of the 2.2v reference.

TEST PROCEDURE

See test procedure for soft explosion. The differences are that there is 5v on the emitter of Q15 instead of 2.2v. Also the collector of Q15 will be switching between -3.5v and about +5v, and the collector of Q16 will switch to about +4.5v.

FIREBALL SOUND
(refer to block diagram 3)

The fireball sound is heard whenever an opening is made in all three rings allowing the center cannon to fire at the player's ship. The technical description is identical to that of soft explosion with a few minor differences. Instead of a low pass filter there is a simple resistor summing network consisting of R81 and R82. White noise is injected through R81. 60 Hz is injected through R82.

TEST PROCEDURE

See the test procedure for the soft explosion circuit. There are two signals present at the input of IC20, 60Hz and noise. If there is only noise out when the circuit is activated then check the 60HZ oscillator IC16 for a signal - a logic probe can be used for that. If a 60 HZ hum only is heard then check to see if white noise is making it to R81.

SHIELD BOUNCE SOUND
(refer to block diagram 3)

The shield sound is heard whenever the player ship comes in contact with the outer ring and is deflected away.

The technical description is almost the same as the soft explosion circuit description. The input to the CCA is the same as the fireball except for different values. The voltage switch is different in that it is a ''and controlled switch''. Both the junction of R85 and R86 and the junction of R88 and R89 must be at a low level to turn on the circuit. Q12 acts as a simple switch that supplies Q13 with the necessary voltage to pass the 60HZ signal. When the circuit is operating normally the collector of Q13 is switching between -3.5v and + 5v at a 60 HZ rate.

TEST PROCEDURE

Use the same test procedure outlined in the soft explosion circuit, and the fireball circuit. A major difference in this circuit is the ''and controlled voltage switch''. If no sound is heard when the circuit is activated first check to make sure proper signals are present at the adder junction. Next check for a 60Hz signal at the base of Q13. If there isn't a signal then go back to IC16 and check for oscillation. If there is a signal present then check for a low going signal on the junction of R85 and R86. Next check the emitter of Q13, it should be switching to + 5v when shield EN- is low. If it isn't then Q12 is indicated bad. If it is switching then check the collector of Q13 to see if it switching between -3.5v and + 5v, if not then Q13 is indicated to be bad. Next check the collector of Q14 to see if it is switching correctly. For isolation purposes Q12 and Q13 can be shorted collector to emitter with a clip lead.

INPUT CONTROL CIRCUITRY
(refer to block diagram 1)

IC1 is a schmitt-trigger inverter package that cleans up digitial information arriving at connector J2 on pins 11, 15, and 16. The CPU board controls all sound generation by supplying digitial data pulses through 16 pin connector J2. IC2 and IC3 latch this control information on the board as follows:

IC2 (74LS164) is an 8-bit serial to parallel shift register. Data in the form of a bit stream moves from connector J2-16 through IC1 and into pin 1 of IC2. Pin 8 receives clock pulses from the CPU via J2-15. Each pulse causes a single bit of data present at pin 1 to be transfered sucessively down the line to outputs A thru H. When the eight output ports are filled, IC3 (74LS377) swings into action. The outputs of IC2 are tied to the inputs of IC3 (1D-8D). When IC3 receives a load pulse on pin 11 thru connector J2-11, the data present on each of its inputs is transferred straight across to its output ports (1Q-8Q). Now data which entered on one channel thru connector J2-16 is available for use in the 8 channels of latch IC3.

TEST PROCEDURE

To verify proper operation of IC1, disconnect 16 pin ribbon connector J2 and decrease volume. Check IC1-2 with a logic probe, scope, or meter. It should read high or 2.4-5vDC (logic 1). Repeat for pins 6&4 of IC1.

With a test lead, ground IC1-13. The output of IC1-2 should now read low or 0 ±0.7 vdc (logic 0). Repeat for pins 6&4 while grounding 9 & 11.

To verify proper operation of IC2, load all lows into its output ports by tying IC2-1 to ground. With another test lead connected to ground tap IC2-8 about 10 times. Outputs A thru H should now all read low. At this point, tap IC3-11 with the ground lead. Outputs 1Q-8Q should now all read low.

Repeat the above procedure, but remove the ground lead from IC2-1. This should load all highs into all the output ports. This completes all the tests.

At this point the volume control may be turned up. The only sound that should be heard is the star sound. The star sound may be disabled by grounding IC3-6.

QUICK CHECK PROCEDURE

At this point all of the sounds generated on the audio board can be tested one at a time. Follow the above procedure for loading all 'ones' into the input control latch (IC3).

TABLE 2

SOUND	TEST POINT	GROUND/ OPEN	TAP/ HOLD
LASER	J2-14	G	T
SOFT EXPLOSION	J2-13	G	T
LOUD EXPLOSION	J2-12	G	T
FIREBALL	IC3-2	G	H
SHIELD	IC3-5	G	H
STAR	IC3-6	O	H(off)
THRUST	IC3-9	G	H
BACKGROUND	IC3-12	G	H

Using a test lead ground the test points shown in table 2 to activate the desired sound. The star sound is unique in that it requires that the ground be removed to enable it. Some sounds will sound more realistic if the test lead is tapped on the test point (e.g. explosions). To fully exercise the background sound refer to it's troubleshooting procedure.

OUTPUT AMPLIFIER
(refer to block diagram 1)

The output amplifier section consists of a pre-amp and volume pot driver IC27 (TL081), main driver amp IC25 (TL081) and speaker drive transistors Q17 and Q18.

IC27 drives the external volume pot located on the coin door and its associated cable. If little or no volume is heard, meter the pot wires between J1-8 and J1-3. The resistance should vary as the pot is rotated. If the audio is at maximum volume regardless of the pot position, suspect an open lead between ground and the pot lead connected to connector J1-1.

The final drive is a non-inverting amplifier circuit containing IC25, Q17 and Q18. Observe the waveform at the speaker wire which is the emitter junction of Q17 and Q18. If the upper half of any sound waveform appears clipped, suspect Q17. For the lower half, Q18 is the suspect. For no audio meter Q17 and Q18 out of circuit and look for burned resistors R122 and R124.

STAR SOUND
(refer to block diagram 4)

The star sound is heard whenever one of the attacking stars breaks off from a ring. The star sound circuit is composed of three blocks. A 9Hz oscillator, a square wave to triangle wave converter, and a voltage controlled oscillator (VCO).

Both oscillators are enabled by bringing pin 4 of both IC's to a high level. A square wave exits at pin 3 of IC23 into the square wave to triangle converter (R114, R115, and C39). The triangle wave is injected into pins 2 and 6 of IC24 causing changes in the trigger and threshold voltage levels which in turn causes proportional changes in the output frequency of the VCO, IC24. The output of the VCO is then fed into a resistive voltage divider and into the summing junction.

TEST PROCEDURE

Check pin 4 of IC23 and IC24 for a high level when the star sound has been enabled. Check frequency at pin 3 of IC23 - it should be approximately 9Hz. Check test point 1 for a triangular wave of the same frequency. If there is no signal here check C39 for a short. TP1 may also be grounded to check the output frequency of IC24. It should be approximately 1.1khz at pin 3.

LASER SOUND
(refer to block diagram 4)

The laser sound is heard whenever the player fires his ship. The laser is fired three times for every one time the fire button is depressed. This is done under software control, so in some test conditions the laser will sound different than in actual game play conditions.

The laser circuitry is composed of five main blocks, the enable switch (1/6 IC6 and Q3), ramp control (Q4, C22, R39, R41, R42), the VCO (IC17), Peak-Peak to TTL converter (Q5, D9, C25 & R45), gated octave adder (½ IC12, R47 to R51 & C26).

A low level on IC6-5 will turn off switch transistor Q3 which brings the voltage on the collector from about +5vdc down to -3.5vdc. This in turn takes Q4 out of conduction allowing C22 to charge through R41. This ramp voltage at the top of C22 is injected into IC17-5, the control voltage pin of the VCO. As the control voltage ramps between +12vdc and +14vdc the squarewave output of the VCO will ramp down in frequency from 23khz to 6khz. The output of the VCO (IC17-3) is then fed into the Peak-Peak to TTL converter. A 5v p-p squarewave enters the clock input of the divider IC12. The outputs are then added together and sent on to the summing junction. The sound is enabled by bringing IC12-2 to a low level.

TEST PROCEDURE

With the audio board ribbon cable disconnected from the CPU board the laser sound will be disabeled. The laser sound can be actuated by tapping a grounded lead to IC6-5. Voltage and frequency readings for various points in the circuit are given for IC6-5 both open and shorted to ground, in Table 3.

TABLE 3

IC6-5	IC6-6 volts	Q3-C volts	Q4-C volts	IC17-5 volts	IC17-3 freq.	IC17-3 period
open	-0	-0	-0	13	23kc	43µs
shorted to ground	5	-3.5	14.3	14.3	6kc	166µs

Note: Q3-C is used as shorthand notation for transistor Q3, the collector terminal.

The only other points worth mentioning here are that the output of the VCO (IC17-3) should be at least 5 volts p-p and the ramp control circuit can be disconnected from the enable switch by means of W12. With W12 cut a grounded test lead connected to the square end of the jumper can be used to simulate the action of Q4. This procedure is handy when the voltage readings on Q3-C check but those on IC17-5 do not. If the above test yields good readings on IC17-5 and the same readings were bad before cutting W12, then Q4 is leaky and must be replaced.

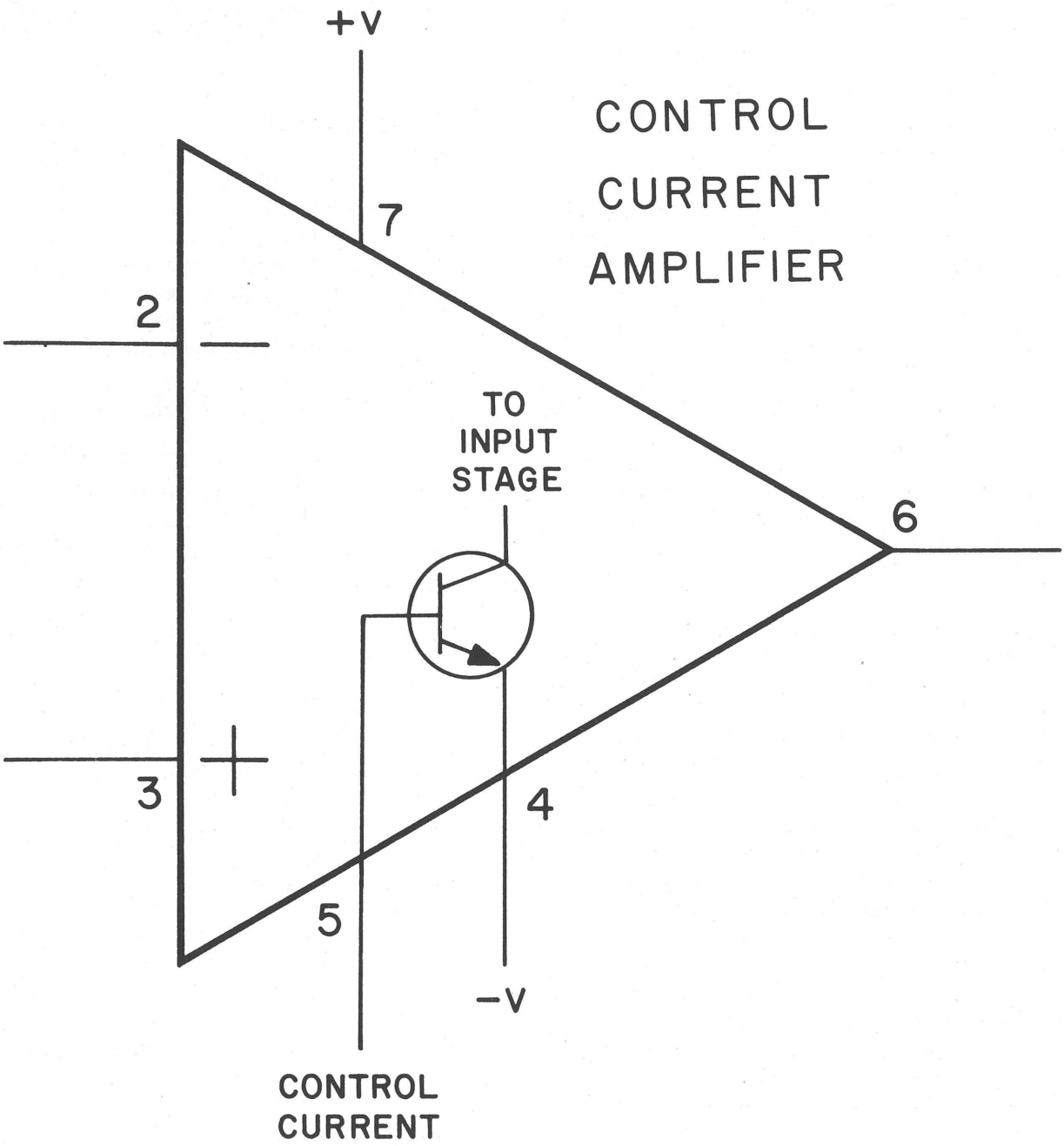
+V
CONTROL
CURRENT
AMPLIFIER
7
2
TO
INPUT
STAGE
6
3
4
5
-V
CONTROL
CURRENT

FIGURE TWO

INPUT CONTROL CIRCUITRY

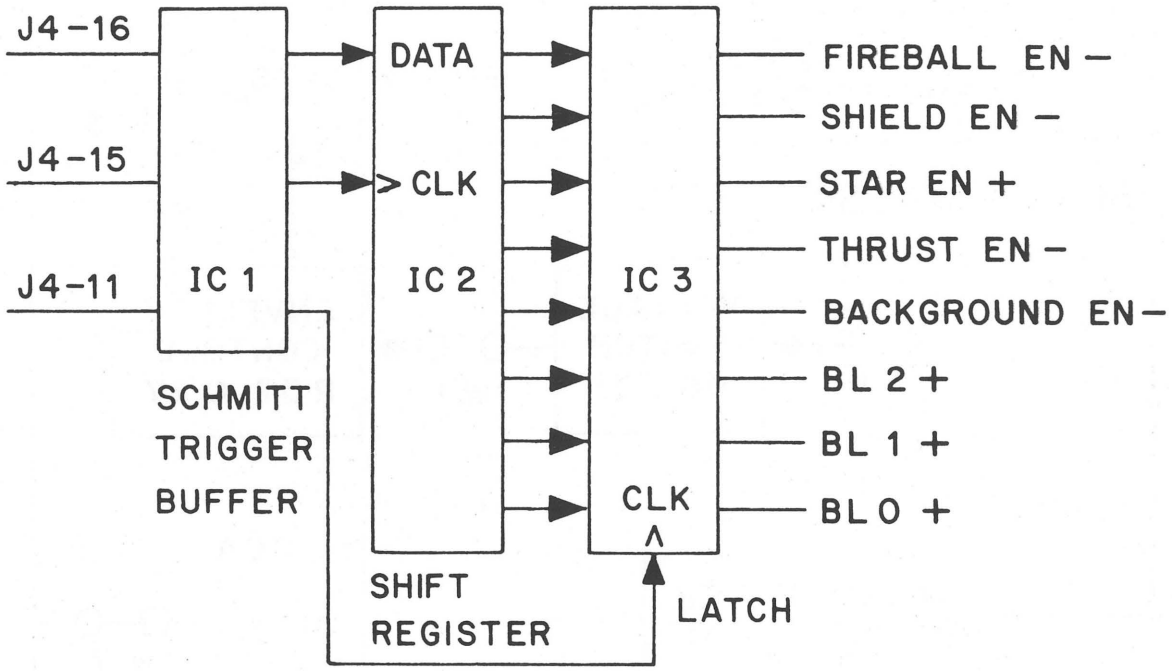

OUTPUT CIRCUITRY

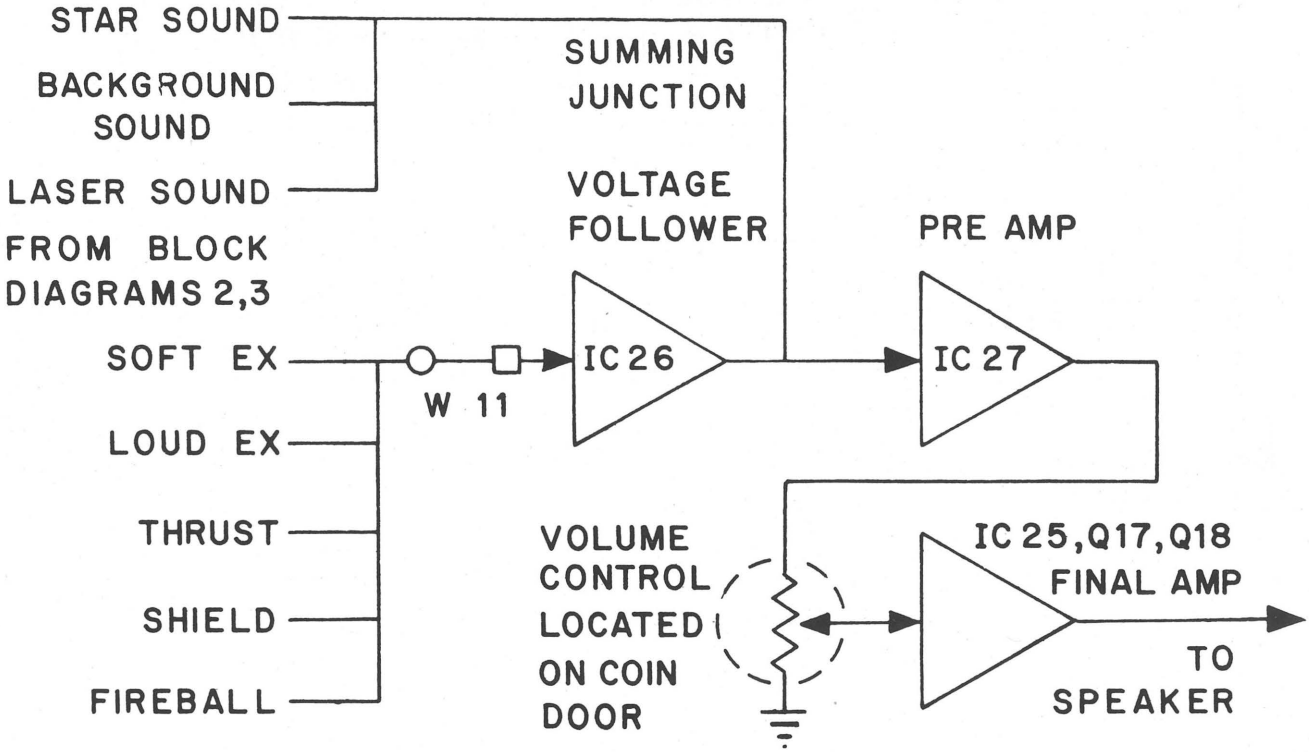

BLOCK DIAGRAM ONE

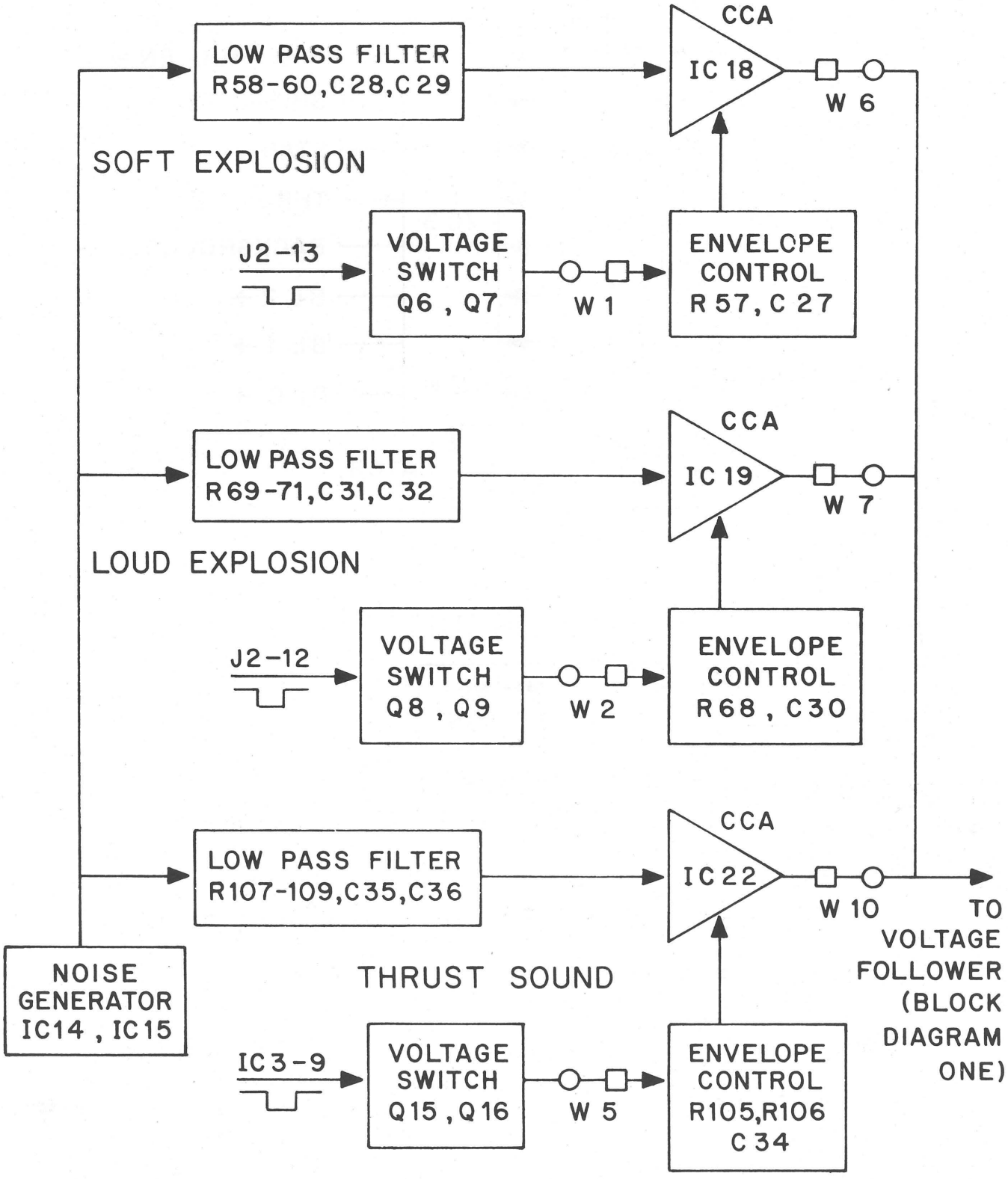

BLOCK DIAGRAM TWO

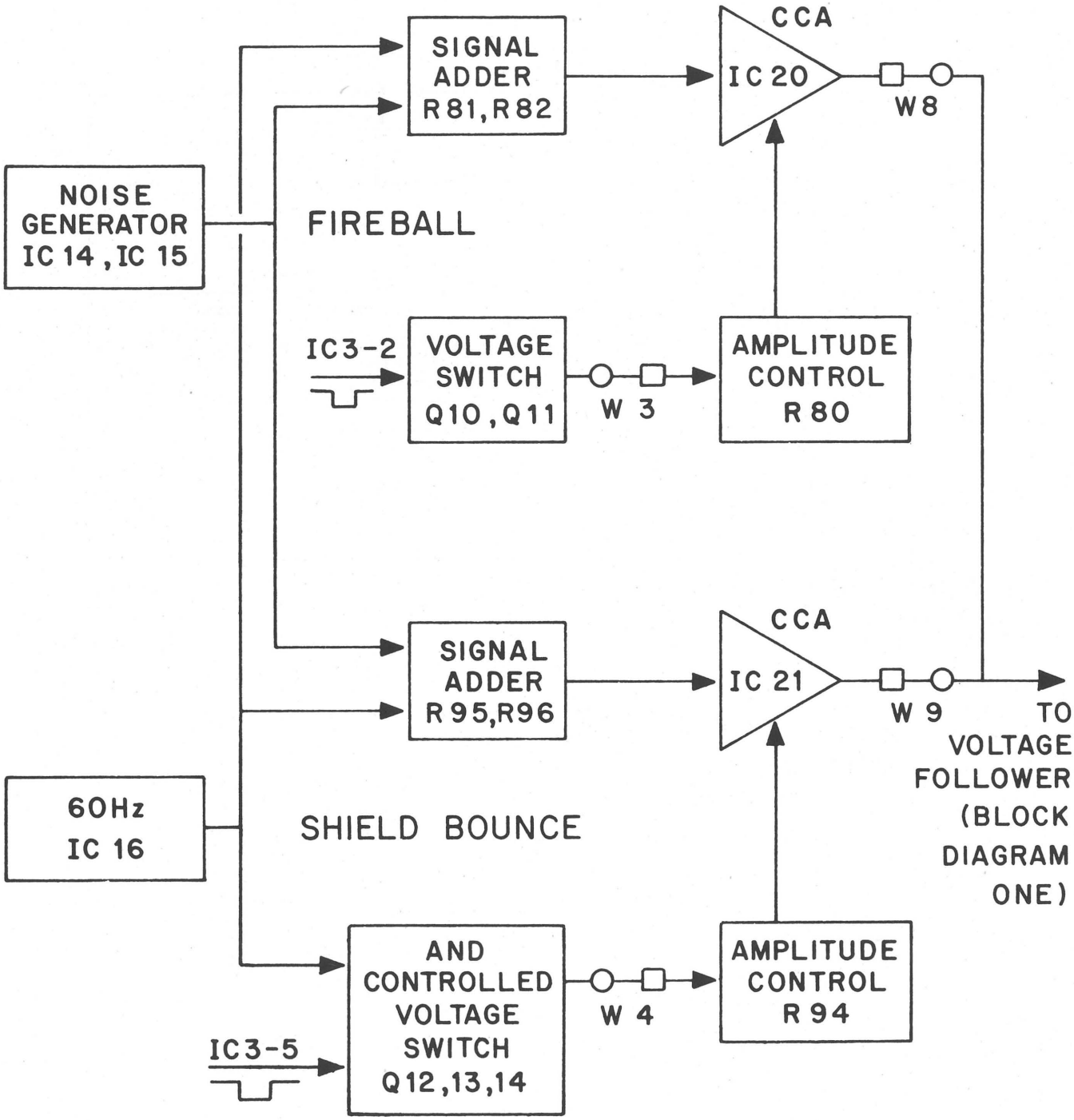

BLOCK DIAGRAM THREE

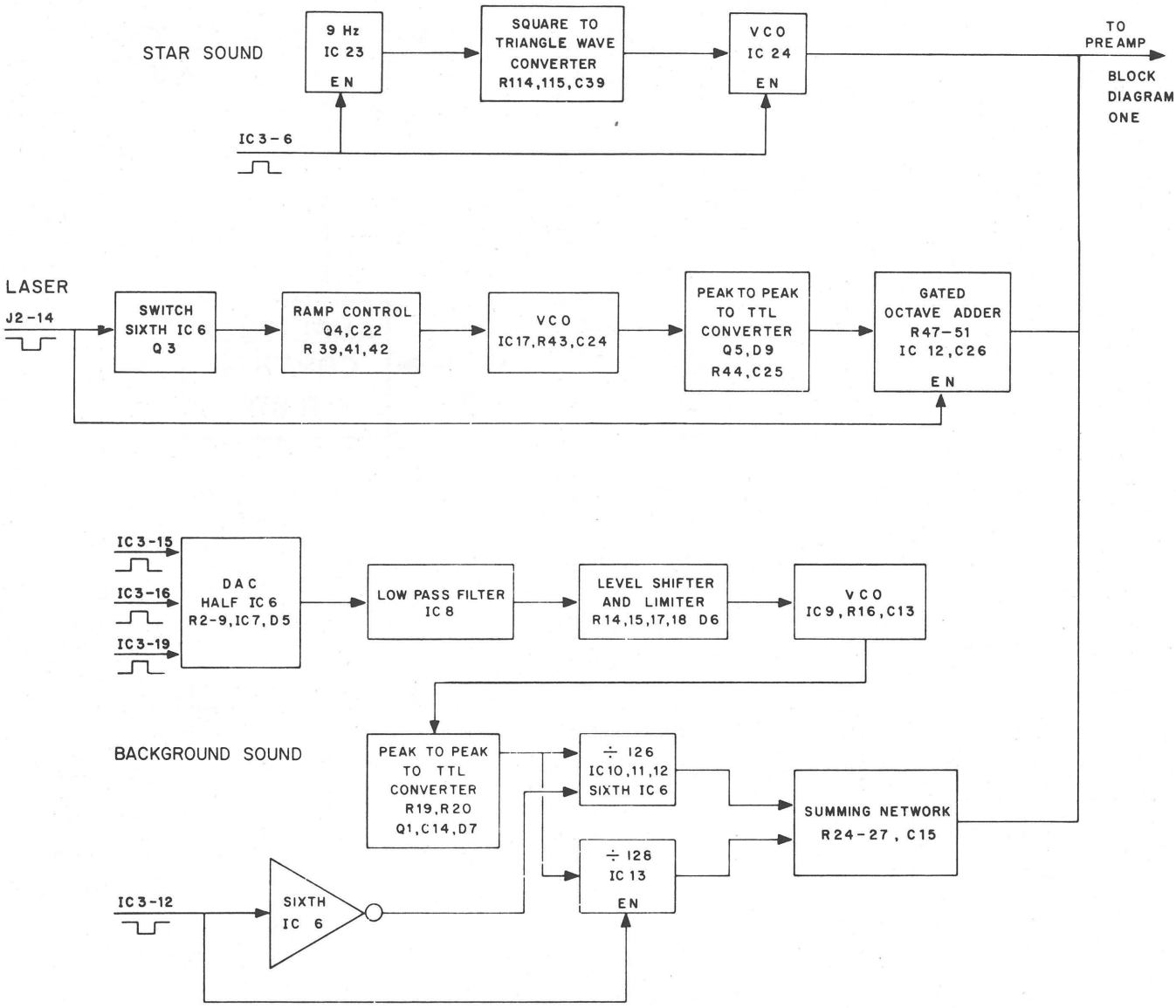

BLOCK DIAGRAM FOUR

SECTION 7

TROUBLESHOOTING

UNIVERSAL BENCH TEST

CONFIGURATION

The components depicted in figure A represent the integral elements and interconnects necessary to effectively bench test the Cinematronics vector display video game system. The configuration is universal in that the game logic board A, display assembly B, and the power supply D are consistent from game to game. Audio board C varies in design for each new game though maintaining the pinout of its input power molex plug. Player control ribbon cable 3 terminates at the player control panel elements of each game (i.e. Joystick, Fire & Thrust buttons, Coin Acceptor Mechanism, etc.)

POWER INTERCONNECTS

The power supply D provides all voltages necessary for game operation.

Logic board drive is +5 volts ± 5% applied to pin 10 of the input power molex plug, & ground enters the logic board thru pin 4 to pins 1, 5, and 6. The logic board will free run in the game attract mode with proper power applied.

The audio board accepts +25 volts on pin4 and -25 volts applied thru pin 6 to pin 8. Ground enters pin 7 and is trace connected to speaker return pin 5. Pin 9 accepts +5 volts DC.

Power for the display is +25 volts thru pin 6 of its molex plug to pin 5 and -25 volts on pin 8. The CRT filament voltage of 6.3 V.A.C. enters the display electronics through pins 1 & 7 via a twisted pair of wires from the supply. A full wave rectified, unfiltered spot kill level of approximately +25 volts is applied to pin 14. The assembly is grounded thru pin 15 to pin 12.

SYSTEM TEST CONSIDERATIONS

As previously mentioned, the logic board A will free run in the particular game attract mode solely with +5 volt applied. Ribbon cables 1 & 2 are output lines and can be removed without affecting the free-run mode. Ribbon cable 3 is an input line and can also be removed for test purposes while free running.

The audio board C can be effectively diagnosed with proper power applied and a speaker. The logic board generates most sounds by grounding various control lines through ribbon cable 2. The cable can be removed and game sounds can be generated by tying these lines low temporarily with a jumper wire. Refer to the appropriate audio board schematic and theory of operation section.

The display assembly cannot be powered up without data cable 1 from the logic board connected. With the cable open or improper data being fed from the logic board, the circuit breakers CB1 & CB2 on the power supply will trip indicating a load in excess of 3a being drawn from the +25 and -25 volt lines. Testing of the monitor requires a functional logic board. While troubleshooting a no display condition, it is recommended to remove the 8 pin molded female plug from the neck of the CRT to protect the phosphor on the tube face from being burned by a high intensity spot.

TEST EQUIPMENT

For most test purposes, a wideband oscilloscope and a digital or analog multi-meter is adequate. Also, a tri-level logic probe for verifying the presence of digital information is recommended.

Testing and troubleshooting of the logic board is the least straightforward aspect of bench test. However, a logic board exerciser

has been developed to be used in conjunction with a signature analyser that allows effective troubleshooting & repair with a minimum knowledge of microprocessor theory and operation. The exerciser puts a 4 bit alpha-numeric code on each IC leg of each chip on the CPU board which then can be probed & read with the signature analyser to verify proper operation. Contact the customer service department at Rock-Ola for details.

TEST PROCEDURES

The first step in effective bench testing is to review the system theory of operation included in the manual. Discussed are principles from the mathematical concept of vector systems to the actual hardware techniques employed in generating a vector video game display.

For specific troubleshooting procedures, refer to the symptom-remedy diagnostic chart included in the manual.

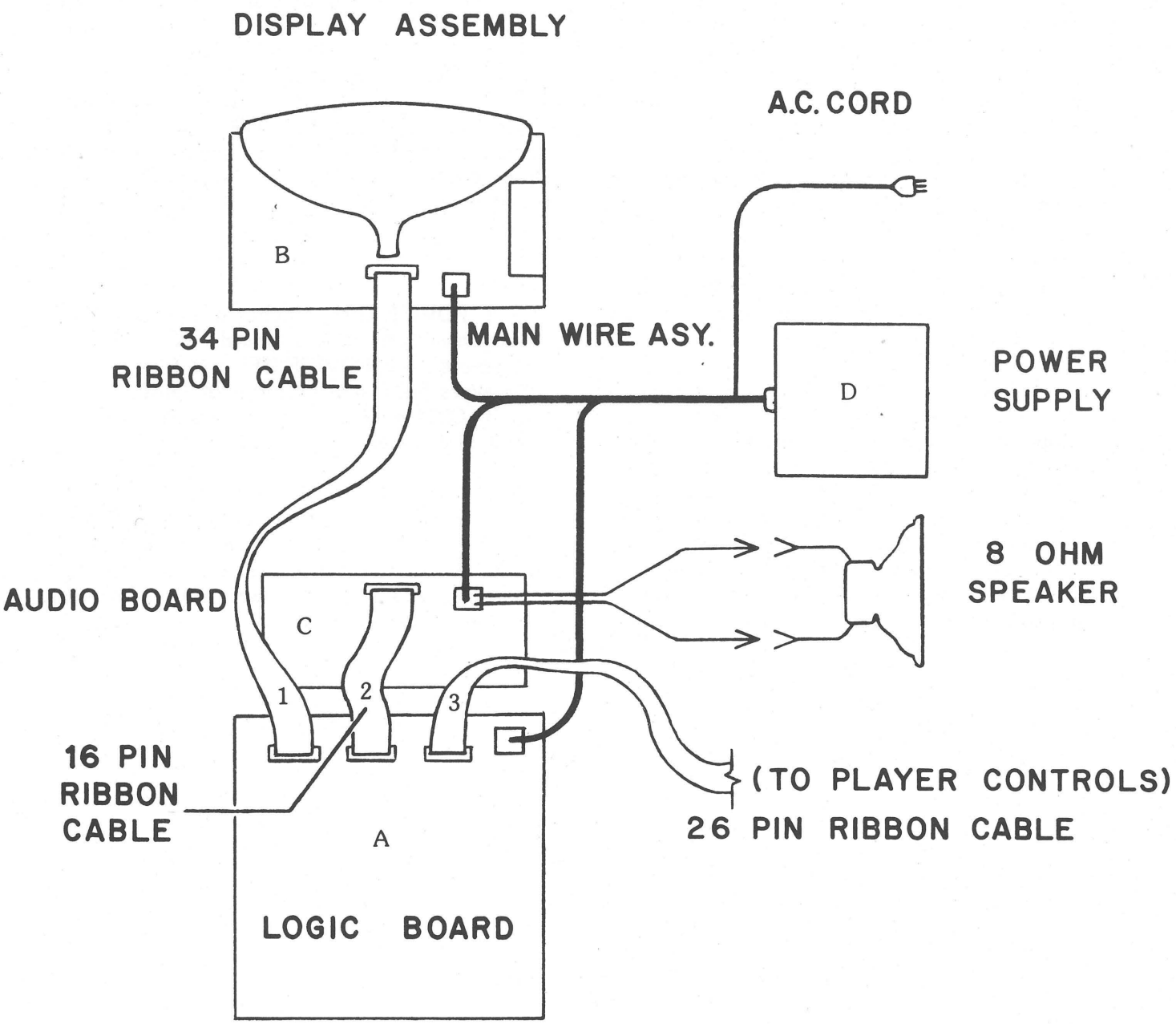

UNIVERSAL BENCH TEST CONFIGURATION

FIGURE A

Here is a systematic (I hope) guide to trouble shooting a monitor that blows breakers. Monitor must be connected to a good CPU. Check for burned componenets. The first thing we want to do is be able to power up the monitor without blowing breakers - then do trouble shooting.

POWER OFF. Unplug yoke from monitor board. Unplug socket from CRT. POWER ON.

If breakers blow: POWER OFF. See 1.

If breakers hold: Check outputs of -15v, +15v, and +5v regulators. Output must be within ± 0.5 volt tolerance.

A. Use O-scope to check deflection circuits for proper signal. 1mv/div time base is a good scope setting. Between DAC-80 output and input of Q101 or Q201, signal amplitude is about ± 3 volts peak. DC component should be less than ± 200 mv. Too much DC component will trip breakers. If signal into Q101/Q201 is good, problem is in transistorized deflection amps. With yoke disconnected, a good amp will put out an odd looking "square wave", swinging between +25 volts. To check a bad deflection amp, check all transistors. Look for burned R118, R119, R113, R117 or R218, R219, R213, R217. R115, R116, R120, R121 may open with no burn marks. For test purposes, protection transistors Q106, Q107, Q206, Q207 may be removed from the circuit and amplifier can be powered up. Always replace protection transistors before returning monitor to normal service.

1. POWER OFF. Unplug heat sink wiring harnesses from monitor board. POWER ON. Breakers blow: POWER OFF See 2.
Breakers hold: one or more of Q110, Q111, Q210, Q211 are shorted. Damage elsewhere is likely. Follow procedure at A.

2. Problem is most likely Video High Voltage module. Unplug from board and POWER ON. Breakers hold: replace or repair Video power supply. Breakers blow: Maybe a shorted tantalum capacitor.

TABLE 7-1. TROUBLESHOOTING GUIDE

PROBLEM	PROBABLE SOLUTIONS
No Picture	Listen for audible "clatter" from the deflection yoke on the CRT neck. If the clatter is present, deflection circuitry is working and the problem is in the intensity circuit. No high voltage. If game audio is present, the CPU board is functional and the problem is in the monitor. If the audio is distorted or absent, the CPU board is suspect. If CPU board is equipped with red led near the input power plug, verify that it flashes once when power is applied and remains off thereafter. If no LED, verify that C8 pin 6 is constantly low with a voltmeter. Check the neck of the CRT for a glowing filament. If there is no glow, check the brown & black twisted pair of the CRT plug for 6.3 volts AC. Be sure all connections to the CPU board and monitor are firmly seated. Connect a scope to the yellow wire leading to the CRT connector. Set brightness full clockwise. There should be an 80-100 volt DC base with pulses dropping down to a 40 volt level. If no pulses, probe IC7 pin 4 with a scope and observe data pulses. If present, check Q2 & Q3 with an ohmeter or transistor tester. Check cathode of D5 for a full wave rectified, unfiltered voltage signal floating at +25 volts. Check seating of CRT plug. Remove and probe with scope to verify presence of proper signals.
Narrow Line on Display	Check IC1. Check for open yoke windings with ohmeter. Check for bad solder & crimp connections to yoke wires. Verify continuity between display board and heat sunk power transistors Q110, Q210, Q111 and Q211. Check Q110, Q210, Q111, Q211 with ohmeter or transistor tester. Inspect solder connections on circuit board molex connector socket pins.
Half Picture	Left Half: Check Q206, 208, 210 Right Half: Check Q207, 209, 211 Top Half: Check Q107, 109, 111 Bottom Half: Check Q106, 108, 110

TABLE 7-1. TROUBLESHOOTING GUIDE (Continued)

PROBLEM	PROBABLE SOLUTIONS
	Check solder connections on heat sink molex plugs J3 & J4. Check diodes CR109, 110, 111 Check diodes CR209, 210, 211 Check transistors Q105, Q205 Check resistors R116, R216.
No Brightness Control	Check intensity pot R111 for open wiper or internal short. Check for open capacitor C17. Check for bad solder connections to R111.
Picture on Display Jitters	Replace analog switch IC1. Check size pots R109 and R209 for wiper noise by turning briskly while observing the screen. Readjust for proper screen size. Check for bad solder connections on R109 & R209. Check DAC IC101 & IC201 for bad solder connections. Insure that all molex connectors are properly seated.
Suspect High Voltage too high/too low	An accurate High Voltage meter will read close to 16KV if high voltage is good. Self-contained HV meters vary widely in accuracy. If +90 and +400 volts out of high voltage supply are good, chances are 16KV is good. If +90 or +400 volts are bad, repair or replace high voltage supply.
Dotted Display	Check IC-7 pins 2, 4. Verify proper operation of IC1. Check for proper +25 and -25 volts DC. Check operation of DAC's IC101 and IC201. On logic board, check I 8 pin 2 for pulses. Verify presence at analog switch.
No Audio	Check for open speaker coil. Check transistors 2N6292 and 2N6107 and nearby output components on audio board with ohmeter or transistor checker. Check 7815 and 7915 outputs. Check for open wiper on volume control mounted on inside of coin door. Refer to audio board theory of operation and troubleshooting guide. Replace F2 on logic board.

TABLE 7-1. TROUBLESHOOTING GUIDE (Continued)

PROBLEM	PROBABLE SOLUTIONS
Coin Counter is Inoperative	Check 2N6292 transistor on logic board with ohmeter or transistor tester. Verify proper operation of A4 by grounding A4 pin 1. Coin counter should click. Disconnect coin counter molex connector. Measure DC voltage on red wire. Meter should read +25 volts DC.
Gives No Credits	Tie E4 pin 12 to ground. If credits fail to appear, replace E4. If credits appear, disconnect logic board ribbon connector J3. Measure +5 volts on A4 pins 1 & 5. If missing, replace pull up resistor pack C2. Alternately ground A4 pins 1 & 5. If credits appear, problem is in switches on coin door. Verify proper coin door microswitch operation. Reconnect J3. Observe A4 pins 3 & 6 alternately while depressing microswitch lever on coin mechanism. Pins 3 & 6 should change states. Replace A4. Replace F2 (74LS259) on logic board.
Player Control Button(s) Inoperative	Refer to player control schematic in APPENDIX. Verify with ohmeter proper closure of player control leaf blade switches. Remove J3 connector. Measure +5 volts on D4 - 1, 2, 3, 4, 12, 13, 14, 15. If missing, replace D4. Replace pull up resistor pack D2. Measure +5 volts on C4 - 1, 2, 3, 4, 12, 13, 14, 15. If missing, replace C4. Replace pull up resistor pack C2. Coin up a game and, with J3 disconnected, ground aforementioned pins on C4 & D4. If display responds problem is in continuity from J3 to player control switches.

SECTION 8

SUGGESTED PARTS FOR STOCK

The following parts fail most frequently:

MONITOR

		PART NO.
LF13331	— Analog switch	G-0715
2N5876	— PNP output transistor	G-0822
2N5878	— NPN output transistor	G-0823
2N5320	— PNP driver transistor	G-0819
2N5322	— NPN driver transistor	G-0820
7406	— IC inverter package	G-0668
2N5550	— NPN transistor 140 volt BVceo	G-0821
7805	— +5 volt regulator IC	G-0672
7815	— +15 volt regulator IC	G-0673
7915	— -15 volt regulator IC	G-0674

CPU (Logic)

74LS259/DM8334	— IC 8 bit latch	G-0694
74LS32	— IC or gate	G-0683
D ROM 1	— IC PROM	G-0707
20101 A2	— IC RAM 256 x	G-0667

AUDIO

2N6107	— PNP output transistor	G-0824
2N6292	— NPN output transistor	G-0825
TL081/LF351	— IC op-amp	G-0718
CA3080	— IC transconduct	G-0713
74LS377	— IC octal D flip-flop (also used in CPU)	G-0696

The following parts don't fail frequently, but are not readily available local electronic supply houses:

MONITOR

DAC-80	— digital to analog converter	G-0714

CPU (Logic)

Masked ROMS	— set of four contain game program	
D ROMS (1-6)	— custom made for CPU	G-0707, G-0708, G-0709, G-0710, G-0711, G-0712
25LS181	— ALU...G-0676	

SECTION 9

PARTS LIST

OVERALL ASSEMBLY

G-101

ITEM NO.	PART NO.	DESCRIPTION	QTY.
1	G-5005-A	Cabinet Assembly	1
2	G-5060-A	Control Panel Assembly	1
3	G-5070-A	Logic/Audio Assembly	1
4	G-5015-A	Monitor Assembly	1
5	G-5035-A	Power Supply Assembly	1
6	G-5020	Operators Manual	1
		CABINET ASSEMBLY G-5005-A	
1	G-24000-A	Cabinet - Wood	1
2	G-0882	Decal - R.H.	1
3	G-0881	Decal - L.H.	1
4	G-5010-CA	Coin Door Complete - Canada	1
	G-5010-AA	Coin Door Complete - Australia	1
	G-5010-BA	Coin Door Complete - Belgium	1
	G-5010-FA	Coin Door Complete - France	1
	G-5010-GA	Coin Door Complete - German	1
	G-5010-JA	Coin Door Complete - Japan	1
5	ST-10643-D	10-24 X 1 3/8 Carriage Bolt Blk Oxide	4
6	ST-4813	.203 I.D. X 1/2 O.D. X .031 Flat Washer	4
7	ST-8724-D	10-24 Hex Flg Whiz Lock Nut Blk Oxide	4
8	G-5006	Mounting Rail	2
9	ST-10643-D	10-24 X 1 3/8 Carriage Bolt Blk Oxide	4
10	ST-9443	10 Int. Lockwasher	4
11	ST-10757	10-24 Wing Nut	4
12	G-5035-A	Power Supply - Complete	1
13	ST-3339-D	10-24 X 2 Carriage Bolt Blk Oxide	4
14	ST-8724-D	10-24 Hex Flg Whiz Lock Nut	4
15	G-5022	Speaker - 6 X 9	1
16	ST-10643-D	10-24 X 1 3/8 Carriage Bolt Blk Oxide	4
17	ST-8724-D	10-24 Hex Flg Whiz Lock Nut Blk Oxide	4
18	G-5046	Speaker Grille - Blk	1
19	ST-10759-D	8 X 5/8 Pan Hd Box Drive (Type A) Blk Ox	4
20	G-5012	Tongue Brkt - C.B.	1
21	ST-3330-D	10-24 X 3/4 Carriage Bolt Blk Oxide	1
22	ST-4813	.203 I.D. X 1/2 O.D. X .031 Fl. Washer	1

CABINET ASSEMBLY

G-101

ITEM NO.	PART NO.	DESCRIPTION	QTY.
23	ST-8724-D	10-24 Hex Flg Wz Lock Nut Blk Oxide	1
24	G-5047-A	Coin Box & Cover Assembly	1
	G-5048-A	Coin Box Assembly	1
	G-5013	Coin Box	1
	G-5016	Coin Box Handle	1
	G-5014	Coin Box Cover	1
	ST-10307	Sta-Strap	1
25	G-5015-A	Monitor Assembly	1
26	ST-3330-D	10-24 X 3/4 Carriage Bolt Blk Oxide	4
27	ST-8724-D	10-24 Hex Flg Wz Lock Nut Blk Oxide	4
28	ST-9711	10 X 11/16 Hex Flg (Type A) Z.P.	2
29	G-5070-A	Logic/Audio Complete Assembly	1
30	ST-9710	8 X 5/8 Hex Flg (Type A) Z.P.	1
31	G-5019	Switch Mounting Bracket	1
32	ST-9710	8 X 5/8 Hex Flg (Type A) Z.P.	1
33	G-5042	Interlock Switch	1
34	G-5051-A	Light Assembly - 120VAC	1
	ST-10402	1/2 Locking Clamp	3
	ST-9710	8 X 5/8 Hex Flg (Type A) Z.P.	6
	49557	Ballast Plate	2
	49554-1	Ballast Insulator	2
	ST-9715	8 X 7/8 Hex Flg (Type A) Z.P.	2
	49301	Insulated Starter 20W 220VAC	1
	G-5043	Fluorescent Lamp (F15T12) CW 15 Watt	1
35	G-5056-A	Star Castle Plexi Assembly	1
	G-5023	Star Castle Plexi	1
	G-5027	Instruction Card - English	1
	G-5028	Instruction Card - German	1
	G-5038	Instruction Card - French	1
	ST-10195	Tape - Double Face - 5 3/4	2
36	G-5003	Retainer	2
37	ST-10759-D	8 X 5/8 Pan Hd Box Drive (Type A) Blk Ox	6
38	G-5060-A	Control Panel Assembly	1
39	ST-3339-D	10-24 X 2 Carriage Bolt Blk Oxide	2
40	ST-4813	.203 I.D. X 1/2 O.D. X .031 Fl Washer Z.P.	2
41	ST-10757	10-24 Wing Nut - Palnut	2
		CONTROL PANEL ASSEMBLY	
		G-5060-A	
1	G-24030-A	Control Panel Assembly - Wood	1
2	G-5054	Control Panel Shield	1
3	G-5061	Control Panel - Screened	1
4	G-0623	Switch & Mtg. Assembly	6
5	G-0624	Button Assembly - Long (White)	6

CONTROL PANEL ASSEMBLY

G-5060-A

ITEM NO.	PART NO.	DESCRIPTION	QTY.
6	ST-10754	Hex Palnut (5/8-11) Z.P.	6
7	G-5055-A	Distribution PCB Assembly	1
8	ST-10756	6 3/4 Phil Pan Hd (Type A) Z.P.	2
		DISTRIBUTION P.C. BOARD ASSEMBLY	
		G-5055-A	
1	G-0840	Distribution P.C. Board	1
2	G-0646	3 Cir. Friction Lock Post Con.	1
3	G-5088-A	26 Conductor Ribbon Cable Assembly	1
4	ST-10759	Standoff	2
		MONITOR	
		G-5015-A	
1	G-5071-A	Monitor Mtg. Brkt. Assembly - R.H.	1
2	G-5007	Monitor Mtg. Brkt. - R.H.	1
3	G-5025-A	Vert. Def. Yoke Amp.	1
4	G-5026-A	Horiz. Def. Yoke Amp.	1
5	ST-8258	6-32 X 3/8 Hex Flg Swageform Z.P.	8
6	G-5072-A	Monitor Mtg. Brkt Assembly - L.H.	1
7	G-5008	Monitor Mtg. Brkt - L.H.	1
8	G-0841-A	Video Power Supply	1
9	G-5066-A	Display P.C. & Chassis Assembly	1
10	G-5040-A	Display P.C.B. Assembly	1
11	G-5009-A	Mounting Chassis Assembly	1
12	G-5071	Chassis Angle - Short	1
13	G-5072	Chassis Angle - Long	1
14	ST-10764	6 3/8 Hex Flg (Type A) Z.P.	15
15	G-0860	CRT - 19" (Amprex) M50-102W	1
16	ST-4808	.203 I.D. X 3/4 O.D. X 1/16 Fl. Washer	4
17	ST-9720	10-32 X 1/2 Hex Flg Swageform Z.P.	4
18	G-0583	Spring - Grounding	1
19	G-5073	Display P.C. Shield	1
20	G-0637-A	Yoke Assembly	1
21	G-0900	Overlay - Plastic - CRT	1
		POWER SUPPLY - COMPLETE	
		G-5035-A	

ITEM NO.	PART NO.	DESCRIPTION	QTY.
		DEFLECTION YOKE AMPLIFIER (VERTICAL)	
		G-5025-A	
1	G-0522	Heat Sink	1
2	G-5082-A	Transistor Soc. Cable Assem. Long	1
3	G-0719	Insulator TO-3	2
4	G-0823	Transistor NPN 2N5878	1
5	G-0822	Transistor PNP 2N5876	1
6	ST-10763	6-32 X 5/8 Ph. P.H.M.S. Cad.	4
		DEFLECTION YOKE AMPLIFIER (HORIZONTAL)	
		G-5026-A	
1	G-0522	Heat Sink	1
2	G-5083-A	Transistor Soc. Cable Assem. Short	1
3	G-0719	Insulator TO-3	2
4	G-0823	Transistor NPN 2N5878	1
5	G-0822	Transistor PNP 2N5876	1
6	ST-10763	6-32 X 5/8 Ph. P.H.M.S. Cad.	4
		COUNTER/VOL. CONTROL ASSEMBLY	
		G-5065-A	
1	G-5017	Volume Control Mtg. Bracket	1
2	G-5067-A	Electric Counter Assembly	1
3	46368-A	Electric Counter (Only)	1
4	G-0812	Rectifier 1N4003	1
5	G-0615	.093 Socket	2
6	G-0659	3 Cir. Plug Housing	1
7	ST-8258	6-32 X 3/8 Hex Flg. Swageform Z.P.	2
8	G-5068-A	Volume Control Assembly	1
9	G-0722	Potentiometer 10K (Only)	1
10	G-0614	.093 Pin	1
11	G-0615	.093 Socket	2
12	G-0659	3 Cir. Plug Housing	1
13	ST-9409	3/4 Int. Tooth Lockwasher	1
14	ST-3443	3/8-32 Hex Nut - Z.P.	1
15	33463	Pointer Knob	1
16	ST-1389	Speed Clip	1

LOGIC P.C.B. ASSEMBLY

G-5045-A

ITEM	PART NO.	DESCRIPTION	REF. DES.	MFGR. PART NO.	QTY
1	G-0676	I.C. ALU	L6, M6, N6	25LS181	3
2	G-0677	I.C. NAND Gate	A4, A10, B4, J6	74LS00	4
3	G-0678	I.C. NOR Gate	A6, D10, H8, K4	74LS02	4
4	G-0679	I.C. Hex Inverter	B6, E12, I8	74LS04	3
5	G-0680	I.C. AND Gate	C10	74LS08	1
6	G-0681	I.C. NAND Gate	B12, F4, L2	74LS10	3
7	G-0682	I.C. NOR Gate	C12, D12, F6	74LS27	3
8	G-0683	I.C. OR Gate	A12, B10, J2, K2	74LS32	4
9	G-0684	I.C. Quad D Latch	T9, U9	74LS75	2
10	G-0685	I.C. Mag Comparator	L9, M9, N9	74LS85	3
11	G-0686	I.C. Exclusive OR	J8	74LS86	1
12	G-0687	I.C. Dual J-K Flip Flop	A8, B2, B8, C8, G4, G8, J10	74LS107	7
13	G-0688	I.C. 1 of 8 Data Selectors	C4, D4, E4, F10	74LS151	4
14	G-0689	I.C. Quad Data Selector	L11, M11, N11, P9, R9, S9, T11, U11	74LS157	8
15	G-0690	I.C. Binary Counter	C6, D6, E6, E10, F8, I14, P11, R11, S11	74LS163	9
16	G-0691	I.C. 8 Bit Shift Regist	H6	74LS164	1
17	G-0692	I.C. 4 Bit Shift Regist	G10, H12, N4, M4 P4, P13, R4, S4, T4	74LS194	9
18	G-0693	I.C. Tri-State Quad	N2, R2, T2	74LS257	3
19	G-0694	I.C. 8 Bit Latch	F2	74LS259/ DM8334	1
20	G-0695	I.C. Quad 2-Input Multi.	I12, J12	74LS298	2
21	G-0696	I.C. Octal D Flip Flop	M2, P2, R13, S2, S13, T13	74LS377	6
22	G-0697	I.C. Dual 4 Bit Counter	H4, I4	74LS393	2
23	G-0698	I.C. NAND Gate	A2, I10	74S00	2
24	G-0699	I.C. NOR Gate	H14	74S02	1
25	G-0700	I.C. Hex Inverter	I2, U2	74S04	2
26	G-0701	I.C. AND Gate	A14	74S08	1
27	G-0703	I.C. OR Gate	B14, H10	74S32	2
28	G-0704	I.C. Dual J-K Flip Flop	G2, H2	74S113	2
29	G-0705	I.C. Quad 2 to 1 Data Sel.	G14	74S158	1
30	G-0706	I.C. Look Ahead Carry	L4	74S182	1
31	G-0671	I.C. Dual 4 in NOR Gate	F12	7425	1
32	G-0675	I.C. Quad Comp. Output	J4	74265	1
33	G-0702	I.C. Triple 3 in NAND	G12	74S10	1
34	G-0667	I.C. RAM 256x4	L14, M14, N14	2101A2	3
35	G-0707	I.C. PROM DROM 1	F14	2085	1
36	G-0708	I.C. PROM DROM 2	E14	2086	1
37	G-0709	I.C. PROM DROM 3	D14	2087	1
38	G-0710	I.C. PROM DROM 4	C14	2088	1
39	G-0711	I.C. PROM DROM 5	E8	2089	1
40	G-0712	I.C. PROM DROM 6	J14	2090	1
41	G-0959	I.C. E-PROM	U6, T6, R6, P6	2716	4

LOGIC P.C.B. ASSEMBLY

G-5045-A

ITEM	PART NO.	DESCRIPTION	REF. DES.	MFGR. PART NO.	QTY
42					
43	G-0625	7 Pole Dip Switch	E2		1
44	G-0833	Crystal 20 MHz	I1		1
45	G-0811	Diode	CR1, CR2	1N914 B	2
46	G-0816	Transistor	Q2, Q3	2N3904	2
47	G-0825	Transistor	Q1	2N6292	1
48	G-0783	Cap Disk .02mf 50V	C1-C58		58
49	47723	Cap Disk 680pf 500V	C59		1
50	G-0808	Cap Tant Dip 3.3mf 35V	C62		1
51	G-0995	Cap Elec 100mf 50V	C61		1
52	52344	Resistor, 330 ohm ¼W 5%C	R2, R3		2
53	49264	Resistor, 470 ohm ¼W 5%C	R5		1
54	51564	Resistor, 1K ohm ¼W 5%C	R1, R4, R6, R7, R8, R9, R10, R11, R17, R18, R19, R20		12
55	52358	Resistor 2.2K ohm ¼W 5%C	R15		1
56	51293	Resistor 10K ohm ¼W 5%C	R13, R16		2
57	53868	Resistor 30K ohm ¼W 5%C	R12		1
58	49266	Resistor 560K ohm ¼W 5%C	R14		1
59	G-0779	Resistor Dip Pak 1K	C2, D2		2
60	G-0616	Test Points			6
61	G-0655	Molex, Wafercon 12 Cir	J1	09-18-5127	1
62	G-0652	Male Header PCB 16 Pin	J4		1
63	G-0653	Male Header PCB 26 Pin	J3		1
64	G-0654	Male Header PCB 34 Pin	J2		1
65	G-0965	Jumpers,	D8, U14		2
66	52720	Socket, Dip 14 Pin	F6		1
67	52724	Socket, Dip 16 Pin	D8, F14, U14		3
68	52722	Socket, Dip 24 Pin	L6, M6, N6, P7, R7, T7, U7		7
69	G-0837	Printed Circuit Board			1
70	51289	Resistor, 100 ohm ¼W 5%C	R21		1
71	51994	L.E.D.			1

DISPLAY P.C.B. ASSEMBLY

G-5040-A

1	53837	Resistor, 15 ohm ¼W 5%C	R115, R215		2
2	51561	Resistor 33 ohm ¼W 5%C	R116, R216		2
3	52374	Resistor, 47 ohm ¼W 5%C	R108, R130, R131, R210, R230, R231		6
4	51289	Resistor, 100 ohm ¼W 5%FR	R110, R208		2
4.5	53875	Resistor, 100 ohm ½W 5%FR	R117, R217		2
5	53841	Resistor, 200 ohm ¼W 5%C	R113, R213		2
6	52344	Resistor, 330 ohm ¼W 5%C	R207		1
7	49264	Resistor, 470 ohm ¼W 5%C	R1, R2, R4, R5, R19		5

DISPLAY P.C.B. ASSEMBLY

G-5040-A

ITEM NO.	PART NO.	DESCRIPTION	REF. DES.	MFGR. PART NO.	QTY.
8	53844	Resistor, 820 ohm ¼W 5%C	R130, R230, R112, R212		4
9	51564	Resistor 1K ohm ¼W 5%C	R20, R24		2
10	53863	Resistor, 1.8K ohm ¼W 5%	R104		1
11	52358	Resistor, 2.2K ohm ¼W 5%C	R9, R204		2
12	53864	Resistor, 3K ohm ¼W 5%C	R105, 107, 205		3
13	47832	Resistor, 5.6K ohm ¼W 5%C	R10, R206		2
14	51293	Resistor, 10K ohm ¼W 5%C	R6, R22, R23, R26, R106		5
15	52621	Resistor, 68K ohm ¼W 5%C	R25		1
16	14097	Resistor, 47ohm ½W 5%C	R118, R119, R218, R219		4
17	32831	Resistor, 2.2K ohm ½W 5%C	R21		1
18	43533	Resistor, 8.2K ohm ½W 5%C	R111, R114, R211, R214		4
19	35331	Resistor, 10K ohm ½W 5%C	R3		1
20	46056	Resistor, 2.7 ohm 1W 5%C	R124-R129, R224-R229		12
21	G-0771	Resistor, 360 ohm 1W 5%C	R123, R223		2
22	G-0772	Resistor, 10K ohm 1W 5%C	R7, R8		2
23	G-0773	Resistor, 100 ohm 2W 5%C	R27		1
24	G-0774	Resistor, .18 ohm 3W 5%C	R120, R121, R220, R221		4
25	G-0776	Resistor, 1.43K ohm ¼W 1%	MF R101		1
26	G-0777	Resistor, 2.1K ohm ¼W 1% MF	R201		1
27	G-0778	Resistor, 10K ohm ¼W 1% MF	R103, R203		2
28	52602	Trimpot, 100 ohm	R109, R209		2
29	G-0721	Trimpot, 5K ohm	R102, R202		2
30	G-0811	Diode	D17, D19, D20 D101-D104, D201-D204	1N914 B	11
31	G-0812	Diode	D3, D4, D5, D12, D13, D15, D16, D18 D105-D115, D205-D215	1N4003	31
32	G-0669	I.C. Hex Inverter O.C.	IC 7	7406	1
33	G-0672	I.C. Regulator +5V	IC 8	7805	1
34	G-0673	I.C. Regulator +15V	IC 4	7815	1
35	G-0674	I.C. Regulator -15V	IC 6	7915	1
36	G-0718	I.C. OP. AMP.	IC 102, 202	TL081 P/LF351	2
37	G-0714	I.C. Digitial Analog Con	IC 101, 201		2
38	G-0815	Transistor	Q105, Q106 Q205, Q206	2N2102	4
39	G-0816	Transistor	Q2, Q7, Q8	2N3904	3
40	G-0817	Transistor	Q107, Q207	2N3906	2

DISPLAY P.C.B. ASSEMBLY

G-5040-A

ITEM NO.	PART NO.	DESCRIPTION	REF. DES.	MFGR. PART NO.	QTY.
41	G-0818	Transistor	Q6, Q101, Q102, Q103, Q201, 202, 203	2N5210	7
42	G-0819	Transistor	Q108, Q208	2N5320	2
43	G-0820	Transistor	Q104, Q109, Q204, Q209	2N5322	4
44	G-0821	Transistor	Q1, Q3	2N5550	2
45	G-0781	Cap Disk .005mf 50V	C8, C9		2
46	G-0784	Cap Disk .1mf 50V	C24, C27, C103, C104, C203, C204		6
47	G-0948	Cap Disk .1mf 100V	C102, C202		2
48	G-0799	Cap Film .33mf 35V	C1		1
49	G-0802	Cap Polycarb .022mf 200V	C101, C201		2
50	G-0805	Cap Dip Tant .47mf 35V	C25		1
51	52359	Cap Dip Tant 1mf 35V	C12, C13		2
52	G-0807	Cap Dip Tant 2.2mf 35V	C4, C10, C15, C23, C105		5
53	G-0943	Cap Dip Tant 4.7mf 35V	C26		1
54	G-0790	Cap Elect 47mf 50V	C205, C207		2
55	52724	Socket 16 Pin			1
56	G-0613	Molex, Male Pin Sold Tail		02-09-2134	8
57	G-0660	Molex, Receptacle 15 Cir	J2	03-09-1152	1
58	G-0661	Molex, Wafercon 6 Cir	J5	09-18-5061	1
59	G-0662	Molex, Wafercon 6 Cir	J3	09-18-5062	1
60	G-0663	Molex, Wafercon 6 Cir	J4, J6 K	09-18-5069	2
61	G-0654	Male Header PCB 34 Pin	J1		1
62	G-0902	Printed Circuit Board			1
63	G-0506	Neon Lamp	Lt 1, Lt 2	NE-2	2
64					
65	G-0722	10K Pot.	R11	JAINO56103UA	1
66	G-0523	Heat Sink Thermalloy		22030 B	6
67	G-0524	Heat Sink Thermalloy		6045 B	1
68		Wire			Ref
69	52722	Socket 24 Pin			2

AUDIO P.C.B. ASSEMBLY

G-5050-A

1	G-0811	Diode	D7 to D10	1N914 B	4
2	G-0812	Diode	D1 to D4	1N4003 Plast	4
3	G-0912	Diode	D6	1N5236 B	1
4	G-0813	Diode	D5	1N5240 B	1
5	G-0816	Transistor	Q1, 2, 4, 5	2N3904	4
6	G-0817	Transistor	Q3, Q6 to Q16	2N3906	12
7	G-0824	Transistor	Q18	2N6107	1
8	G-0825	Transistor	Q17	2N6292	1

AUDIO P.C.B. ASSEMBLY

G-5050-A

ITEM NO.	PART NO.	DESCRIPTION	REF. DES.	MFGR. PART NO.	QTY.
9	G-0669	I.C. Hex Inverter O.C.	IC 6	7406	1
10	G-0670	I.C. Schmidt Trigger	IC 1	7414	1
11	G-0687	I.C. Dual J-K Flip Flop	IC 28	74LS107	1
12	G-0691	I.C. 8 Bit Shift Reg.	IC 2	74LS164	1
13	G-0696	I.C. Octal D Flip Flop	IC 3	74LS377	1
14	G-0697	I.C. Dual 4 Bit B.C.	IC 12, 13	74LS393	2
15	G-0690	I.C. Binary Counter	IC 10, 11	74LS163	2
16	G-0673	I.C. +15V Regulator	IC 4	7815	1
17	G-0674	I.C. -15V Regulator	IC 5	7915	1
18	G-0713	I.C. Trnscndt. Op. Amp.	IC 18 to 22	CA3080 E	5
19	51991	I.C. Timer	IC16, 23, 24	LM555	3
20	G-0913	I.C. V.C.O.	IC 9, 17	LM566	2
21	G-0718	I.C. Op. Amp.	IC 7, 8, 15, IC 25, 26, 27	TL081 P	6
22	G-0717	I.C. Noise Generator	IC 14	AMI S2688	1
23	52374	Resistor 1/4W 5%C	R97, R98	47 Ohm	2
24	53838	Resistor 1/4W 5%C	R122, R124	150 Ohm	2
25	53839	Resistor 1/4W 5%C	R2	160 Ohm	1
26	53841	Resistor 1/4W 5%C	R83, R84	200 Ohm	2
27	52377	Resistor 1/4W 5%C	R72, R73	390 Ohm	2
28	53842	Resistor 1/4W 5%C	R29, R61, R62	430 Ohm	3
29	52563	Resistor 1/4W 5%C	R30	560 Ohm	1
30	53843	Resistor 1/4W 5%C	R93	620 Ohm	1
31	53844	Resistor 1/4W 5%C	R9	820 Ohm	1
32	51564	Resistor 1/4W 5%C	R1, 3, 4, 20, 22, 36, 45, 50, 53, 56, 64, 67, 79, 88, 104, 110, 111,	1K Ohm	17
33	53863	Resistor 1/4W 5%C	R89	1.8K Ohm	1
34	53866	Resistor 1/4W 5%C	R5, R6, R14, R21, R32, R46	2K Ohm	6
35	53867	Resistor 1/4W 5%C	R40	2.4K Ohm	1
36	51384	Resistor 1/4W 5%C	R35, R75, R86, R100	2.7K Ohm	4
37	51567	Resistor 1/4W 5%C	R8, R31	3.3K Ohm	2
38	53709	Resistor 1/4W 5%C	R90, R116	3.9K Ohm	2
39	53869	Resistor 1/4W 5%C	R43	4.3K Ohm	1
40	51292	Resistor 1/4W 5%C	R7, 34, 52, 63, 74, 76, 85, 87, 99, 101	4.7K Ohm	10
41	51568	Resistor 1/4W 5%C	R117	5.1K Ohm	1
42	51571	Resistor 1/4W 5%C	R69	6.8K Ohm	1
43	53846	Resistor 1/4W 5%C	R60	7.5K Ohm	1
44	53677	Resistor 1/4W 5%C	R107, R125	8.2K Ohm	2
45	51293	Resistor 1/4W 5%C	R16, 17, 19, R44, R112	10K Ohm	5
46	53847	Resistor 1/4W 5%C	R38, 51, 55, 66, 78, 92, 103	12K Ohm	7

AUDIO P.C.B. ASSEMBLY

G-5050-A

ITEM NO.	PART NO.	DESCRIPTION	REF. DES.	MFGR. PART NO.	QTY.
47	52343	Resistor ¼W 5%C	R59, R121	15K Ohm	2
48	52380	Resistor ¼W 5%C	R15, R58, R70	18K Ohm	3
49	52717	Resistor ¼W 5%C	R49, R126	20K Ohm	2
50	51291	Resistor ¼W 5%C	R123, R109	22K Ohm	2
51	49269	Resistor ¼W 5%C	R95	27K Ohm	1
52	53868	Resistor ¼W 5%C	R25, R127	30K Ohm	2
53	49268	Resistor ¼W 5%C	R96	33K Ohm	1
54	53848	Resistor ¼W 5%C	R105, R106	36K Ohm	2
55	52349	Resistor ¼W 5%C	R37, 48, 54, 65, 77, 91, 102, 114	39K Ohm	8
56	51294	Resistor ¼W 5%C	R71, 108, 115	47K Ohm	3
57	53849	Resistor ¼W 5%C	R27, R39	51K Ohm	2
58	52514	Resistor ¼W 5%C	R47	82K Ohm	1
59	53851	Resistor ¼W 5%C	R18	91K Ohm	1
60	50966	Resistor ¼W 5%C	R57, 68, 119	100K Ohm	3
61	53852	Resistor ¼W 5%C	R33	130K Ohm	1
62	53853	Resistor ¼W 5%C	R113	160K Ohm	1
63	53854	Resistor ¼W 5%C	R24, R26, R80	200K Ohm	3
64	53856	Resistor ¼W 5%C	R82	240K Ohm	1
65	50974	Resistor ¼W 5%C	R41	270K Ohm	1
66	50643	Resistor ¼W 5%C	R81	300K Ohm	1
67	53857	Resistor ¼W 5%C	R94	360K Ohm	1
68	53678	Resistor ¼W 5%C	R120	390K Ohm	1
69	53858	Resistor ¼W 5%C	R118	820K Ohm	1
70	52734	Resistor ¼W 5%C	R28, R42	1M Ohm	2
71	53859	Resistor ¼W 5%C	R13	1.6M Ohm	1
72	53861	Resistor ¼W 5%C	R10, R11	3.3M Ohm	2
73	53862	Resistor ¼W 5%C	R12	5.1M Ohm	1
74	33762	Capacitor, Disk	C44, C45, C46	470pf 50V	3
75	G-0940	Capacitor, Disk	C12, C23	.001mf 50V	2
76	G-0781	Capacitor, Disk	C47	.005mf 50V	1
77	G-0782	Capacitor, Disk	C21, C38, C41	.01mf 50V	3
78	G-0784	Capacitor, Disk	C1, 3, 6, 8, 10, 16, 19, C49 TO 63	.1mf 50V	22
79	G-0941	Capacitor, Electrolytic	C27	2.2mf 35V	1
80	G-0942	Capacitor, Electrolytic	C34	3.3mf 35V	1
81	G-0943	Capacitor, Electrolytic	C30	4.7mf 35V	1
82	G-0788	Capacitor, Electrolytic	C2, 4, 5, 7, 9	25mf 50V	5
83	G-0944	Capacitor, Electrolytic	C17	100mf 35V	1
84	G-0945	Capacitor, Film	C13	.0022mf 100V	1
85	G-0946	Capacitor, Film	C24	.0047mf 100V	1
86	G-0947	Capacitor, Film	C32	.01mf 100V	1
87	G-0948	Capacitor, Film	C14, 15, 18, 20, 25, 26 29, 31, 40, 42	.1mf 100V	10

AUDIO P.C.B. ASSEMBLY

G-5050-A

ITEM NO.	PART NO.	DESCRIPTION	REF. DES.	MFGR. PART NO.	QTY.
88	G-0949	Capacitor, Film	C28, C35	.22mf 100V	2
89	G-0950	Capacitor, Film	C36, C48	.33mf 100V	2
90	G-0951	Capacitor, Film	C37	.47mf 100V	1
91	G-0952	Capacitor, Film	C11, 22, 33, 39, 43	.68mf 100V	5
92	G-0520	Heat Sink Thermalloy		6071 B	4
93	G-0521	Heat Sink Thermalloy		6072 B	2
94	G-0652	Header, P.C.B. 16 Pin		609-1622 M	1
95	G-0656	Molex Wafercon 9 Pin		09-18-5094	1
96	ST-10318	4-40-5/16"M.S.Pan Hd. Cad.			6
97	ST-10469	4-40 Hex Nut Twin Serr.			6
98	G-0875	Printed Circuit Board		AW209200	1

APPENDIX A

Assembly Drawings
Schematics
and
Wiring Diagrams

REVISIONS			
REV	DESCRIPTION	DATE	APPROVED

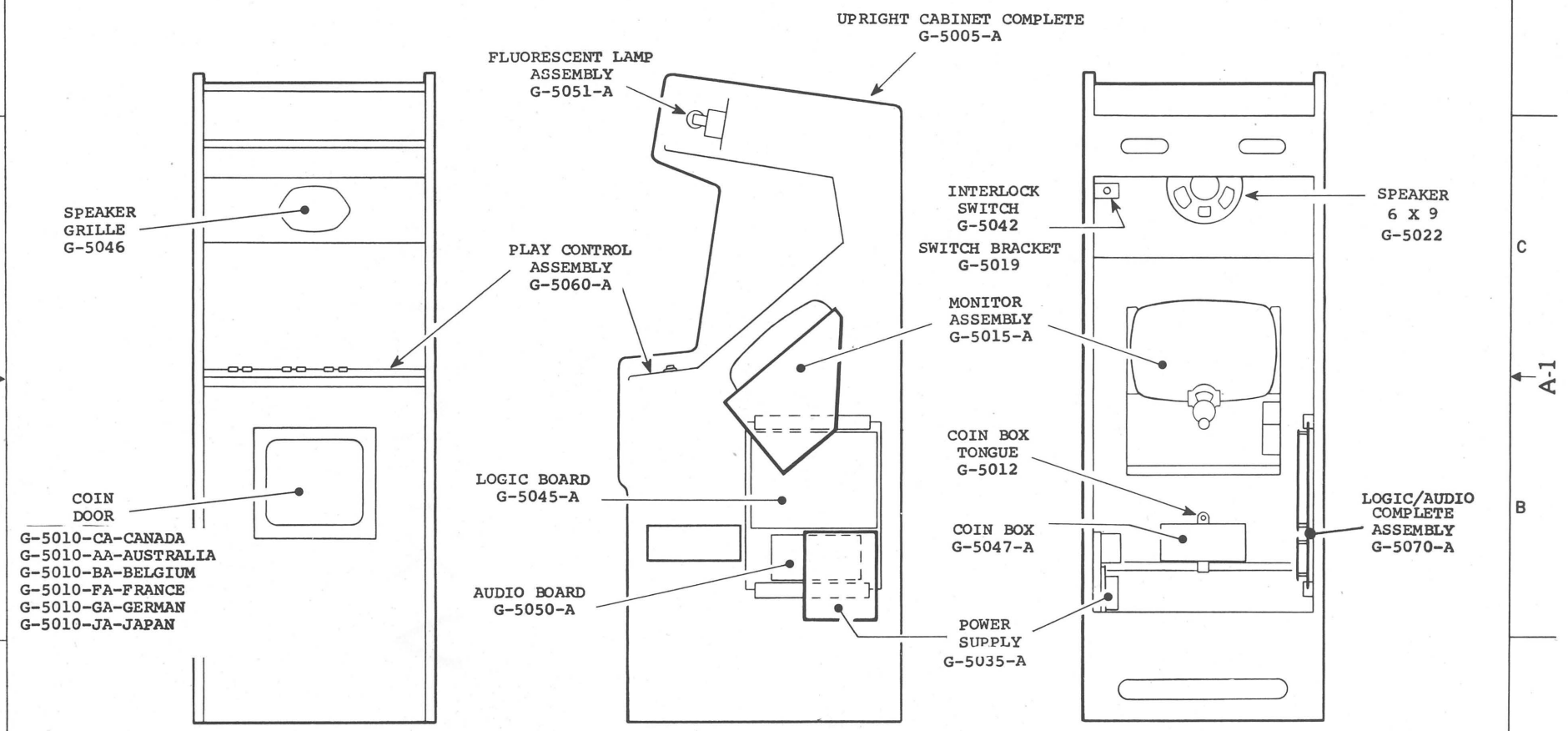

NOTES: UNLESS OTHERWISE SPECIFIED

MATERIAL:	DRAWN BY: dave scott	DATE	ROCK-OLA
	PROJECT ENGR:	DATE	DWG TITLE: CABINET
	RELEASE APPROV:	DATE	
FINISH:	DO NOT SCALE DWG		
	TOLERANCE: UNLESS OTHERWISE SPECIFIED		MODEL NO. / DWG SIZE D / DWG NO. 72-10889-01 / REV.
	PROJECTION:	SCALE:	CODE IDENT. / SHEET OF

BRUNING 40-21 40423 I

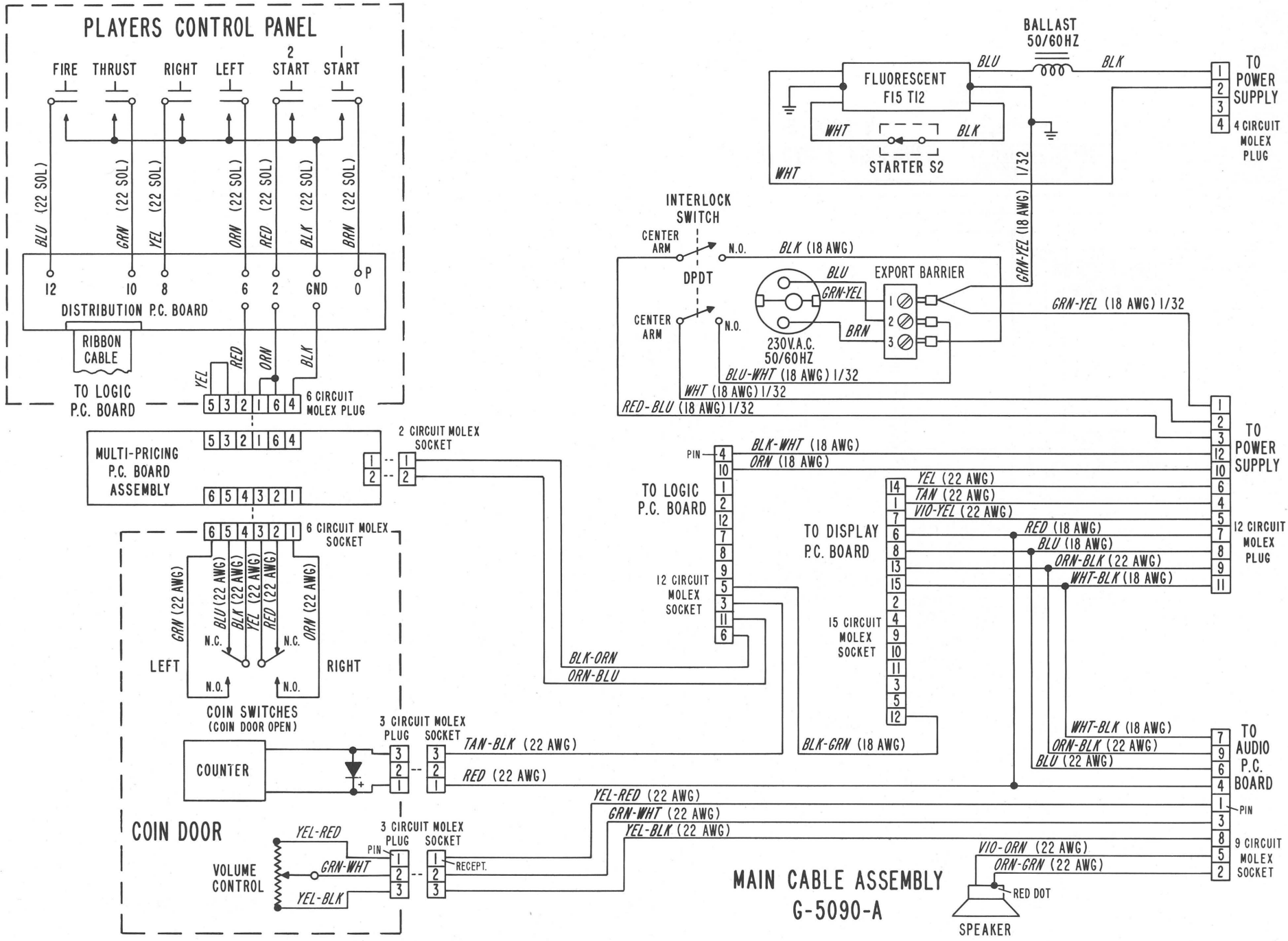
PLAYERS CONTROL PANEL
FIRE
THRUST
RIGHT
LEFT
2 START
1 START
BLU (22 SOL)
GRN (22 SOL)
YEL (22 SOL)
ORN (22 SOL)
RED (22 SOL)
BLK (22 SOL)
BRN (22 SOL)
12
10
8
6
2
GND
0
P
DISTRIBUTION P.C. BOARD
RIBBON CABLE
TO LOGIC P.C. BOARD
YEL
RED
ORN
BLK
5 3 2 1 6 4
6 CIRCUIT MOLEX PLUG
MULTI-PRICING P.C. BOARD ASSEMBLY
6 5 4 3 2 1
2 CIRCUIT MOLEX SOCKET
6 CIRCUIT MOLEX SOCKET
GRN (22 AWG)
BLU (22 AWG)
BLK (22 AWG)
YEL (22 AWG)
RED (22 AWG)
ORN (22 AWG)
N.C.
N.O.
LEFT
RIGHT
COIN SWITCHES
(COIN DOOR OPEN)
COUNTER
3 CIRCUIT MOLEX PLUG
SOCKET
TAN-BLK (22 AWG)
RED (22 AWG)
COIN DOOR
VOLUME CONTROL
YEL-RED
GRN-WHT
YEL-BLK
PIN
RECEPT.
BLK-ORN
ORN-BLU
BLK-GRN (18 AWG)
TO LOGIC P.C. BOARD
12 CIRCUIT MOLEX SOCKET
TO DISPLAY P.C. BOARD
15 CIRCUIT MOLEX SOCKET
BLK-WHT (18 AWG)
ORN (18 AWG)
YEL (22 AWG)
TAN (22 AWG)
VIO-YEL (22 AWG)
RED (18 AWG)
BLU (18 AWG)
ORN-BLK (22 AWG)
WHT-BLK (18 AWG)
TO POWER SUPPLY
12 CIRCUIT MOLEX PLUG
BALLAST 50/60HZ
BLU
BLK
FLUORESCENT F15 T12
WHT
STARTER S2
4 CIRCUIT MOLEX PLUG
GRN-YEL (18 AWG) 1/32
INTERLOCK SWITCH
CENTER ARM
N.O.
BLK (18 AWG)
DPDT
EXPORT BARRIER
GRN-YEL
BRN
230V.A.C. 50/60HZ
BLU-WHT (18 AWG) 1/32
WHT (18 AWG) 1/32
RED-BLU (18 AWG) 1/32
TO AUDIO P.C. BOARD
9 CIRCUIT MOLEX SOCKET
VIO-ORN (22 AWG)
ORN-GRN (22 AWG)
RED DOT
SPEAKER
MAIN CABLE ASSEMBLY
G-5090-A

A2

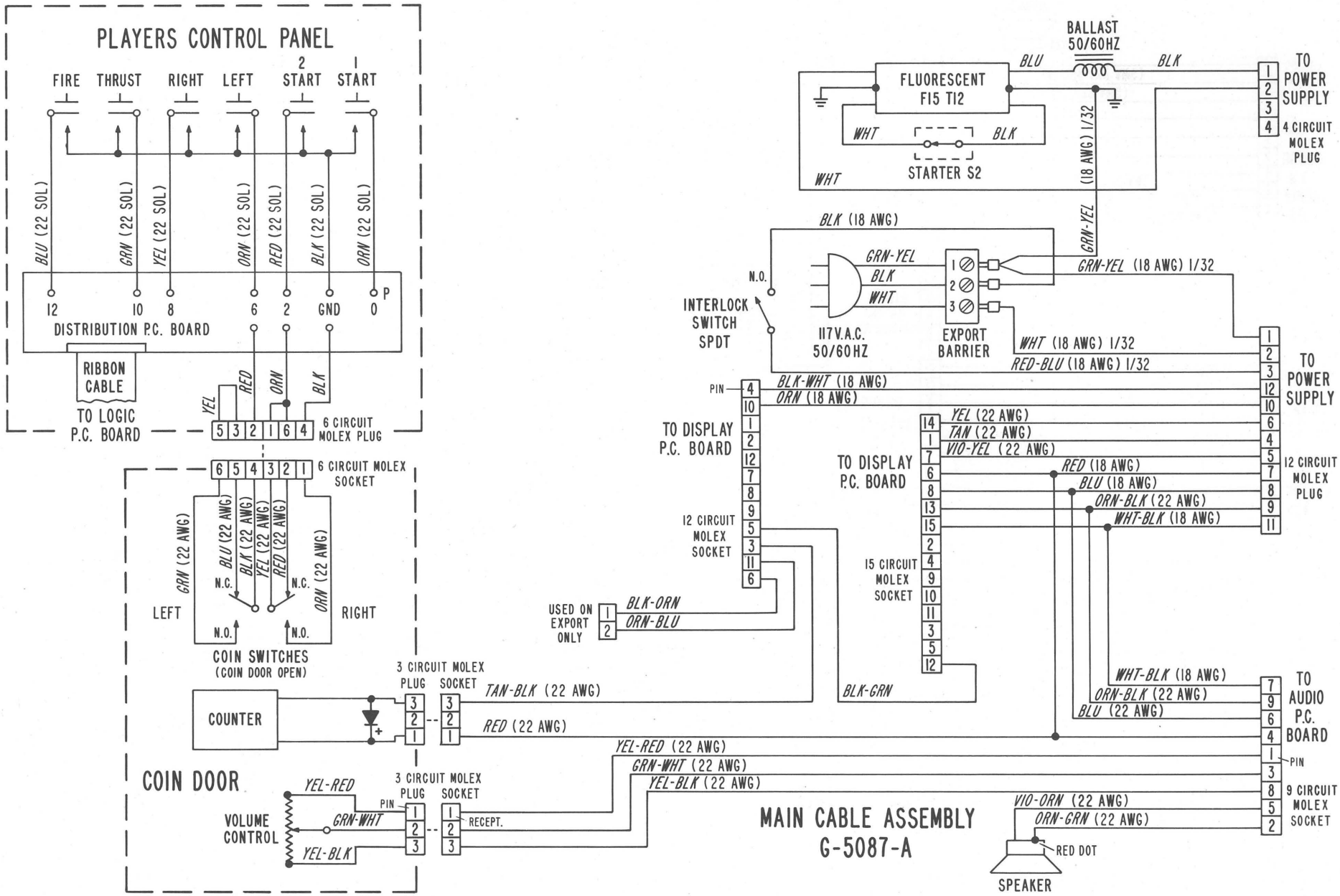
PLAYERS CONTROL PANEL
FIRE
THRUST
RIGHT
LEFT
2 START
1 START
BLU (22 SOL)
GRN (22 SOL)
YEL (22 SOL)
ORN (22 SOL)
RED (22 SOL)
BLK (22 SOL)
ORN (22 SOL)
12
10
8
6
2
GND
0
P
DISTRIBUTION P.C. BOARD
RIBBON CABLE
TO LOGIC P.C. BOARD
YEL
RED
ORN
BLK
5 3 2 1 6 4
6 CIRCUIT MOLEX PLUG
6 5 4 3 2 1
6 CIRCUIT MOLEX SOCKET
GRN (22 AWG)
BLU (22 AWG)
BLK (22 AWG)
YEL (22 AWG)
RED (22 AWG)
ORN (22 AWG)
N.C.
N.C.
N.O.
N.O.
LEFT
RIGHT
COIN SWITCHES
(COIN DOOR OPEN)
COUNTER
3 CIRCUIT MOLEX PLUG
SOCKET
TAN-BLK (22 AWG)
RED (22 AWG)
COIN DOOR
YEL-RED
GRN-WHT
YEL-BLK
PIN
VOLUME CONTROL
RECEPT.
BALLAST 50/60HZ
BLU
BLK
FLUORESCENT F15 T12
WHT
BLK
STARTER S2
WHT
(18 AWG) 1/32
TO POWER SUPPLY
4 CIRCUIT MOLEX PLUG
BLK (18 AWG)
GRN-YEL
BLK
WHT
N.O.
INTERLOCK SWITCH SPDT
117V.A.C. 50/60HZ
EXPORT BARRIER
GRN-YEL
GRN-YEL (18 AWG) 1/32
WHT (18 AWG) 1/32
RED-BLU (18 AWG) 1/32
TO POWER SUPPLY
PIN
BLK-WHT (18 AWG)
ORN (18 AWG)
TO DISPLAY P.C. BOARD
12 CIRCUIT MOLEX SOCKET
YEL (22 AWG)
TAN (22 AWG)
VIO-YEL (22 AWG)
RED (18 AWG)
BLU (18 AWG)
ORN-BLK (22 AWG)
WHT-BLK (18 AWG)
TO DISPLAY P.C. BOARD
15 CIRCUIT MOLEX SOCKET
12 CIRCUIT MOLEX PLUG
USED ON EXPORT ONLY
BLK-ORN
ORN-BLU
BLK-GRN
WHT-BLK (18 AWG)
ORN-BLK (22 AWG)
BLU (22 AWG)
TO AUDIO P.C. BOARD
PIN
YEL-RED (22 AWG)
GRN-WHT (22 AWG)
YEL-BLK (22 AWG)
9 CIRCUIT MOLEX SOCKET
VIO-ORN (22 AWG)
ORN-GRN (22 AWG)
RED DOT
SPEAKER
MAIN CABLE ASSEMBLY
G-5087-A

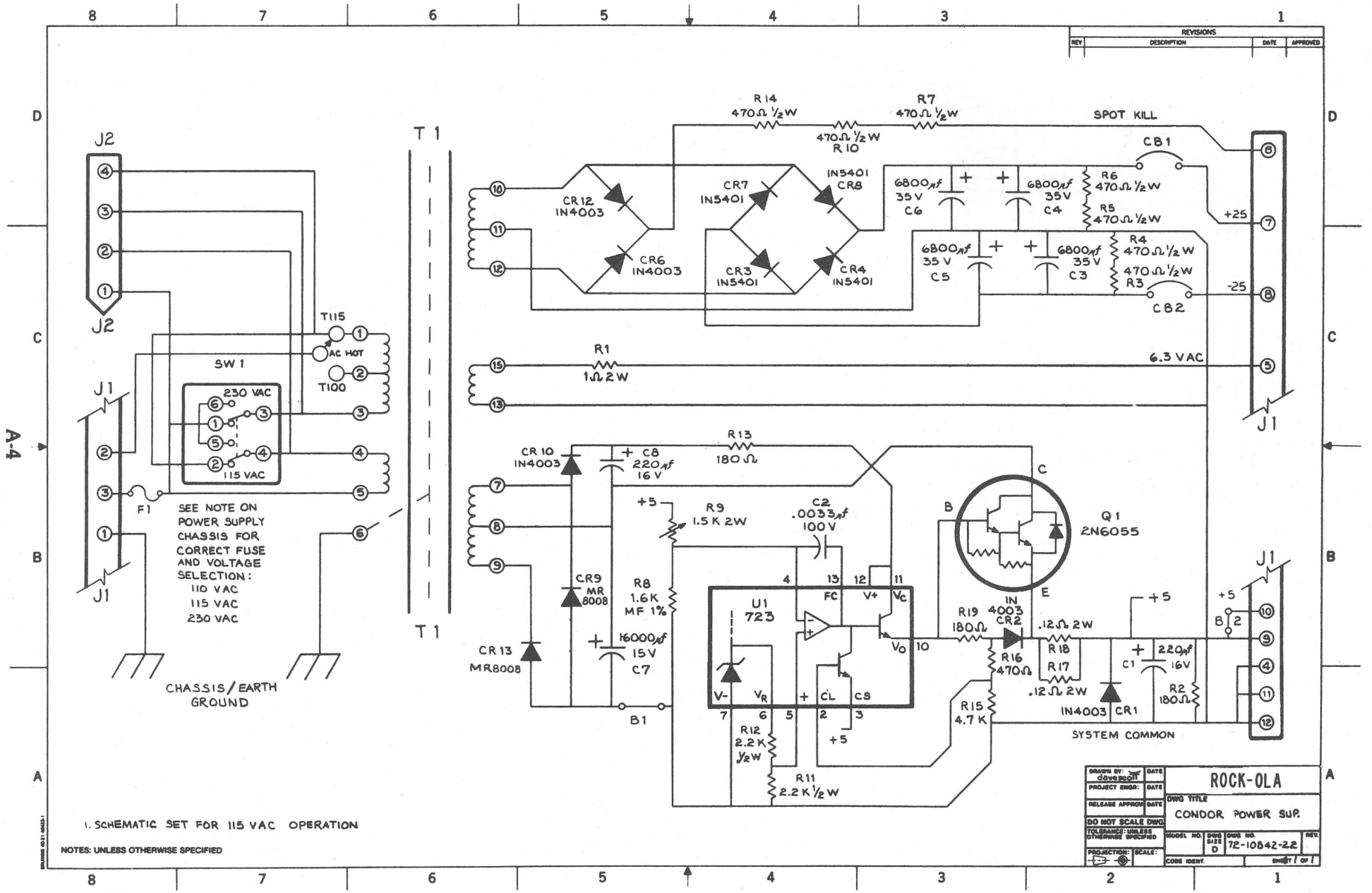
REVISIONS
REV
DESCRIPTION
DATE
APPROVED
J2
J1
T1
SW 1
230 VAC
115 VAC
T115
T100
AC HOT
F1
SEE NOTE ON POWER SUPPLY CHASSIS FOR CORRECT FUSE AND VOLTAGE SELECTION:
110 VAC
115 VAC
230 VAC
CHASSIS / EARTH GROUND
R14 470Ω ½W
R7 470Ω ½W
470Ω ½W R10
SPOT KILL
CB1
CB2
CR12 IN4003
CR7 IN5401
IN5401 CR8
CR6 IN4003
CR3 IN5401
CR4 IN5401
6800μf 35V C6
6800μf 35V C4
6800μf 35V C5
6800μf 35V C3
R6 470Ω ½W
R5 470Ω ½W
R4 470Ω ½W
470Ω ½W R3
+25
-25
R1 1Ω 2W
6.3 VAC
CR10 IN4003
C8 220μf 16V
R13 180Ω
R9 1.5K 2W
C2 .0033μf 100V
CR9 MR 8008
R8 1.6K MF 1%
16000μf 15V C7
CR13 MR8008
B1
U1 723
Q1 2N6055
R19 180Ω
IN 4003 CR2
R16 470Ω
R18 R17 .12Ω 2W
C1 220μf 16V
R2 180Ω
IN4003 CR1
R15 4.7K
R12 2.2K ½W
R11 2.2K ½W
SYSTEM COMMON
1. SCHEMATIC SET FOR 115 VAC OPERATION
NOTES: UNLESS OTHERWISE SPECIFIED
DRAWN BY: GOVERSCOT
PROJECT ENGR:
RELEASE APPROV
DO NOT SCALE DWG.
TOLERANCE: UNLESS OTHERWISE SPECIFIED
PROJECTION:
SCALE:
DATE
ROCK-OLA
DWG TITLE
CONDOR POWER SUP.
MODEL NO.
DWG SIZE D
DWG NO. 72-10842-2.2
REV.
CODE IDENT.
SHEET 1 OF 1

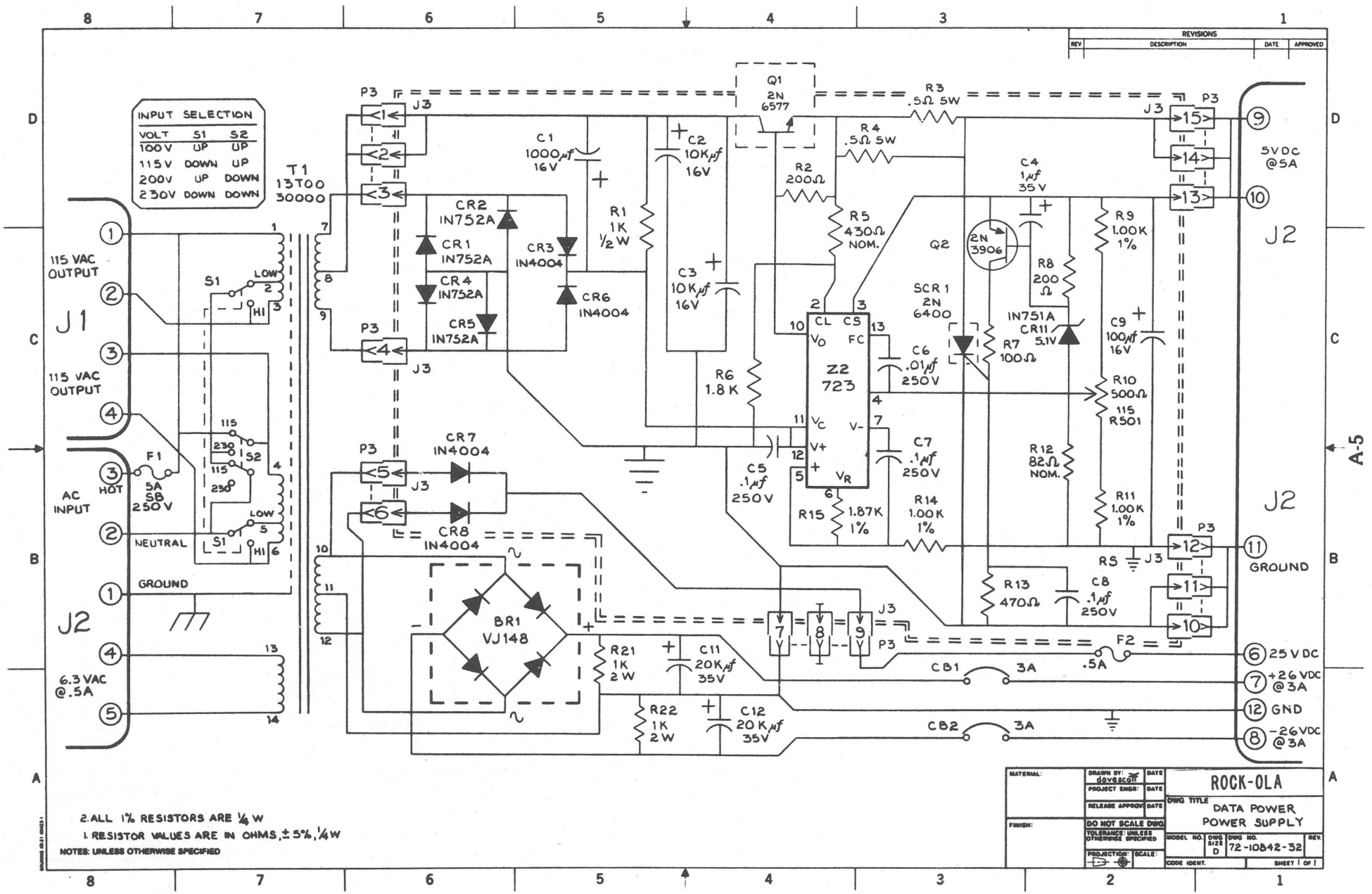
INPUT SELECTION
VOLT S1 S2
100V UP UP
115V DOWN UP
200V UP DOWN
230V DOWN DOWN
T1
13T00
30000
J1
115 VAC OUTPUT
115 VAC OUTPUT
AC INPUT
HOT
NEUTRAL
GROUND
6.3 VAC @.5A
F1
5A SB 250V
S1
S2
LOW
HI
115
230
J2
J3
P3
Q1
2N 6577
R1 1K ½W
R2 200Ω
R3 .5Ω 5W
R4 .5Ω 5W
R5 430Ω NOM.
R6 1.8K
R7 100Ω
R8 200Ω
R9 1.00K 1%
R10 500Ω 115 R501
R11 1.00K 1%
R12 82Ω NOM.
R13 470Ω
R14 1.00K 1%
R15 1.87K 1%
C1 1000μf 16V
C2 10Kμf 16V
C3 10Kμf 16V
C4 1μf 35V
C5 .1μf 250V
C6 .01μf 250V
C7 .1μf 250V
C8 .1μf 250V
C9 100μf 16V
C11 20Kμf 35V
C12 20Kμf 35V
CR1 IN752A
CR2 IN752A
CR3 IN4004
CR4 IN752A
CR5 IN752A
CR6 IN4004
CR7 IN4004
CR8 IN4004
CR11 IN751A 5.1V
Q2 2N 3906
SCR1 2N 6400
Z2 723
BR1 VJ148
F2 .5A
CB1 3A
CB2 3A
5VDC @5A
25 V DC
+26 VDC @3A
GND
-26VDC @3A
GROUND
2. ALL 1% RESISTORS ARE ¼ W
1. RESISTOR VALUES ARE IN OHMS, ±5%, ¼W
NOTES: UNLESS OTHERWISE SPECIFIED
REVISIONS
REV DESCRIPTION DATE APPROVED
ROCK-OLA
DWG TITLE DATA POWER POWER SUPPLY
MODEL NO.
DWG SIZE D
DWG NO. 72-10842-32
REV.
CODE IDENT.
SHEET 1 OF 1
MATERIAL:
FINISH:
DRAWN BY: davesch
PROJECT ENGR:
RELEASE APPROV:
DO NOT SCALE DWG
TOLERANCE: UNLESS OTHERWISE SPECIFIED
PROJECTION:
SCALE:
A-5

REVISIONS			
REV	DESCRIPTION	DATE	APPROVED

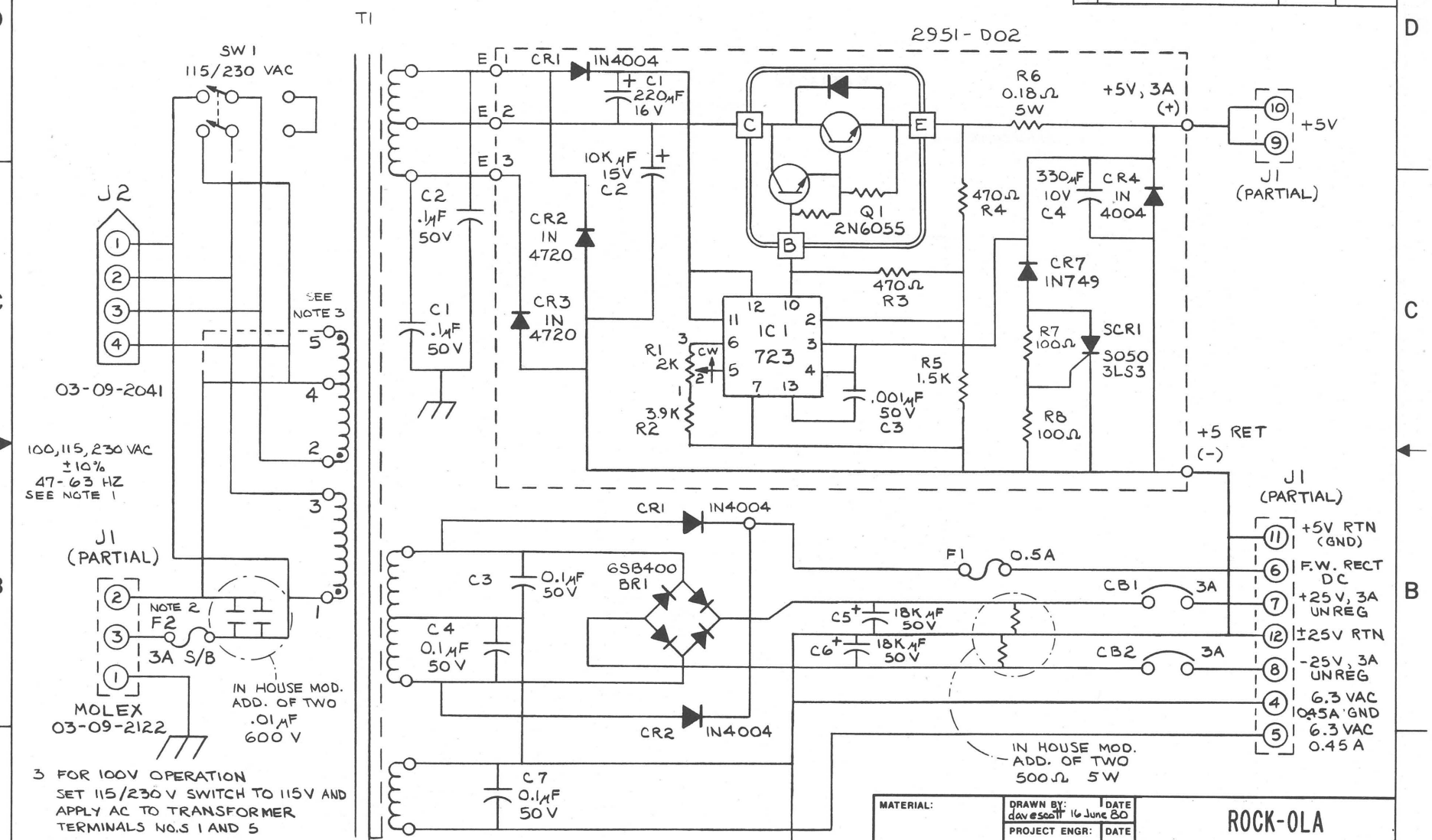

3 FOR 100V OPERATION
SET 115/230 V SWITCH TO 115V AND
APPLY AC TO TRANSFORMER
TERMINALS NO.S 1 AND 5

2 RECOMMENDED FUSING:
3A SLO BLO FOR 115 V
1.5A SLO BLO FOR 230 V

1 TRANSFORMER SHOWN WIRED FOR 115VAC OPERATION

NOTES: UNLESS OTHERWISE SPECIFIED

5 UNUSED COMPONENTS: CR5, CR6

4. REF. DRAWINGS: ASSY 2921-A01, PCB 2951-D01

MATERIAL:	DRAWN BY: dave scott	DATE 16 June 80	ROCK-OLA
	PROJECT ENGR:	DATE	DWG TITLE: XENTEC POWER SUPPLY
	RELEASE APPROV:	DATE 6/17	
FINISH:	DO NOT SCALE DWG		
	TOLERANCE: UNLESS OTHERWISE SPECIFIED		MODEL NO. / DWG SIZE C / DWG NO. 72-10842-12 / REV.
	PROJECTION:	SCALE:	CODE IDENT. / SHEET 1 OF 1

BRUNING 40-21 40423-1

REVISIONS			
REV	DESCRIPTION	DATE	APPROVED

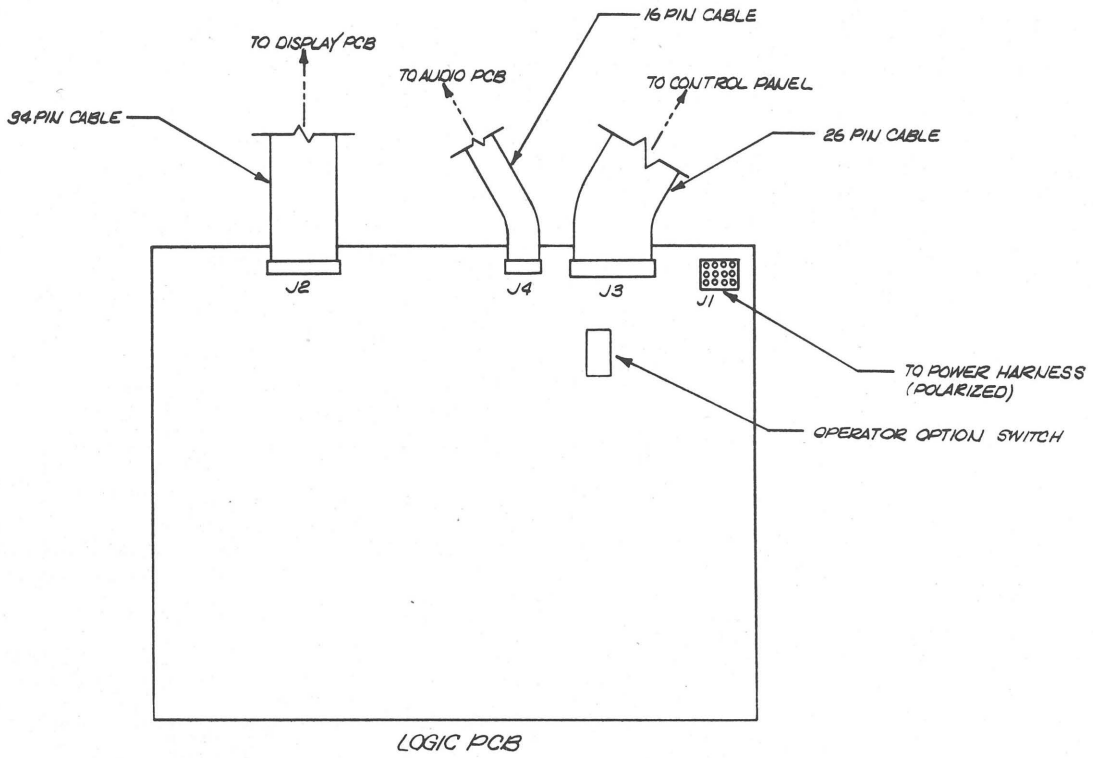

NOTES: UNLESS OTHERWISE SPECIFIED

MATERIAL:	DRAWN BY: C. Thacker	DATE 9-24-79	ROCK-OLA
FINISH: BREAK ALL SHARP EDGES AND DEBURR ALL HOLES.	PROJECT ENGR: C. Willows	DATE 9-79	DWG TITLE: C.P.U. BOARD ILLUSTRATION
	RELEASE APPROV: CEW	DATE 9-79	
	DO NOT SCALE DWG		
	TOLERANCE: UNLESS OTHERWISE SPECIFIED		MODEL NO. / DWG SIZE C / DWG NO. 72-10626-01 / REV.
	PROJECTION:	SCALE:	CODE IDENT. / SHEET / OF /

BRUNING 40-21 40423

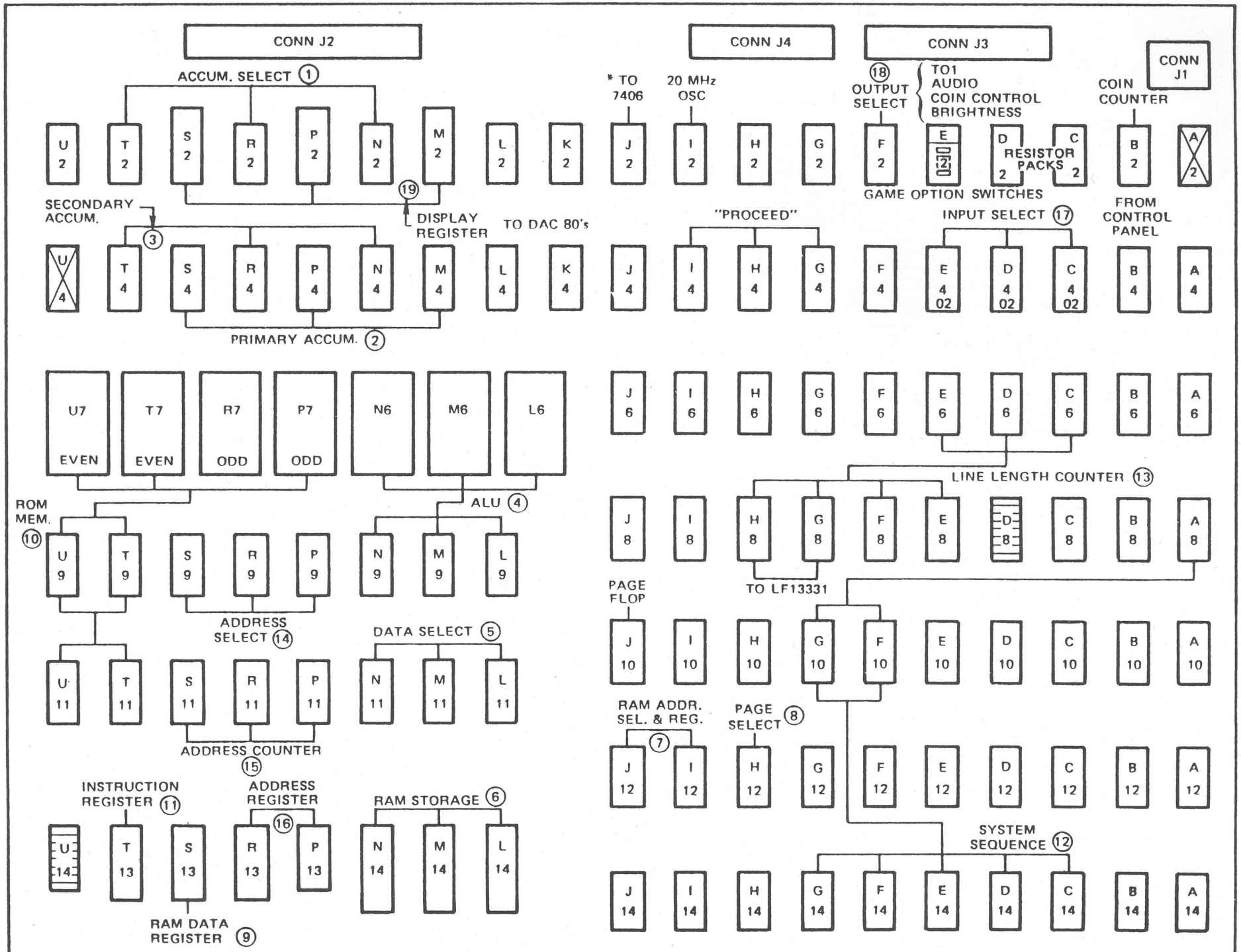

*OR 16-LEVEL INTENSITY CIRCUITRY

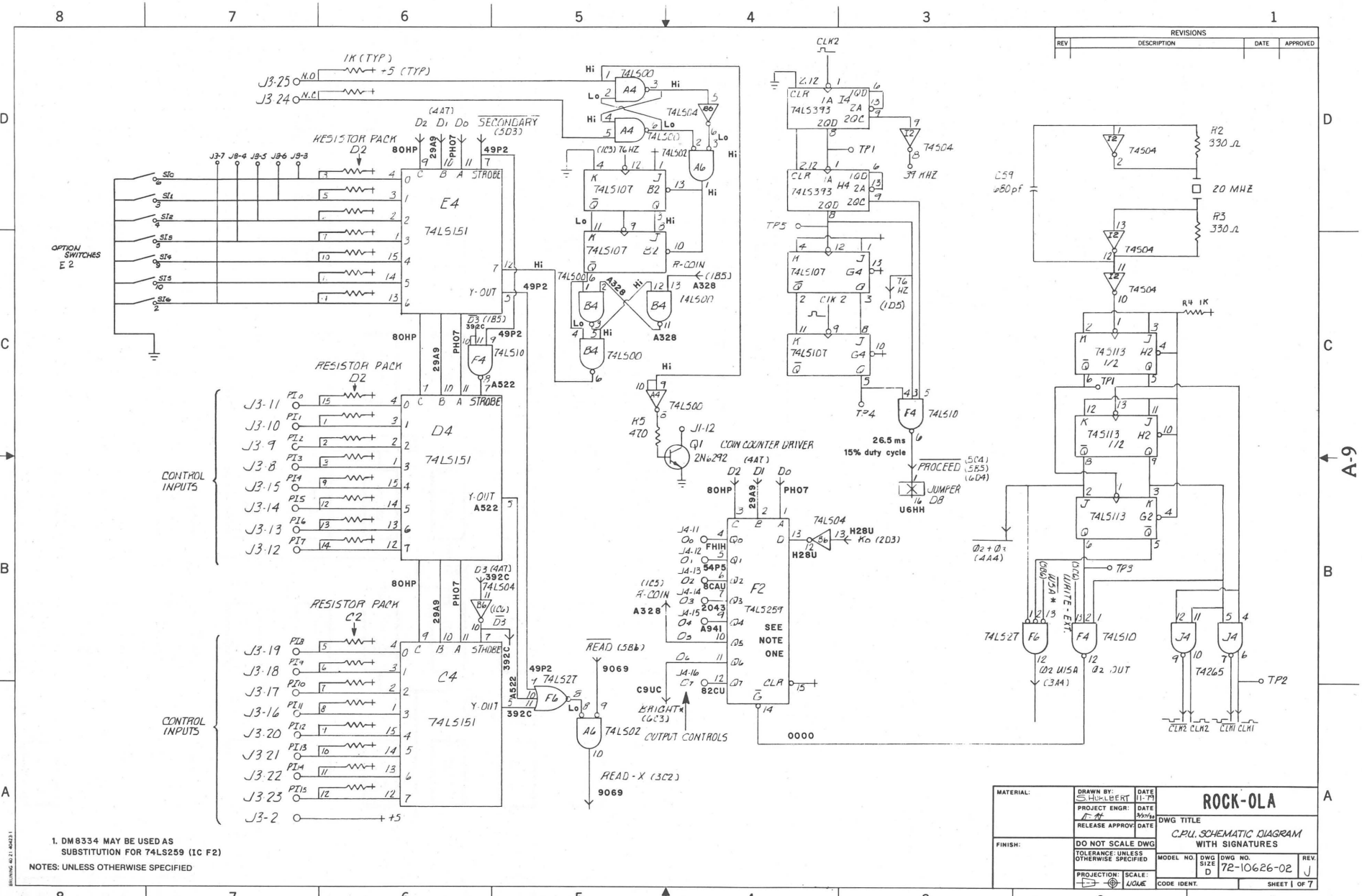
REVISIONS
REV
DESCRIPTION
DATE
APPROVED
1K (TYP)
+5 (TYP)
J3-25
J3-24
N.O
N.C
OPTION SWITCHES E2
RESISTOR PACK D2
80HP
29A9
PH07
49P2
STROBE
E4
74LS151
Y-OUT
D3 (1B5)
392C
F4
74LS10
A522
D4
Y-OUT
CONTROL INPUTS
RESISTOR PACK C2
C4
D3 (4A7)
74LS04
F6
74LS27
READ (5B6)
9069
A6
74LS02
READ-X (3C2)
74LS00
B4
A328
74LS107
R-COIN
(1B5)
TP1
TP5
TP4
74LS393
74LS04
39 KHZ
76 HZ
(1D5)
CLK2
26.5 ms
15% duty cycle
PROCEED (5C4) (5B5) (6D4)
JUMPER D8
U6HH
COIN COUNTER DRIVER
2N6292 (4A7)
K5 470
J1-12
Q1
F2
74LS259
SEE NOTE ONE
FHIH
54P5
5CAU
2043
A941
82CU
C9UC
BRIGHT (6C3)
OUTPUT CONTROLS
H28U
K0 (2D3)
0000
R2 330 Ω
R3 330 Ω
20 MHZ
C59 680 pf
74S04
R4 1K
74S113
TP3
74S27
74LS10
74265
TP2
Ø2 + Ø1 (4A4)
Ø2 WISA (3A4)
Ø2 OUT
WHITE-EXT.
CLK2 CLK2
CLK1 CLK1
1. DM8334 MAY BE USED AS SUBSTITUTION FOR 74LS259 (IC F2)
NOTES: UNLESS OTHERWISE SPECIFIED
MATERIAL:
FINISH:
DRAWN BY: S. HUKLEERT
DATE 11-79
PROJECT ENGR:
RELEASE APPROV:
DO NOT SCALE DWG
TOLERANCE: UNLESS OTHERWISE SPECIFIED
PROJECTION:
SCALE: NONE
ROCK-OLA
DWG TITLE
C.P.U. SCHEMATIC DIAGRAM WITH SIGNATURES
MODEL NO.
DWG SIZE D
DWG NO. 72-10626-02
REV. J
CODE IDENT.
SHEET 1 OF 7
A-9

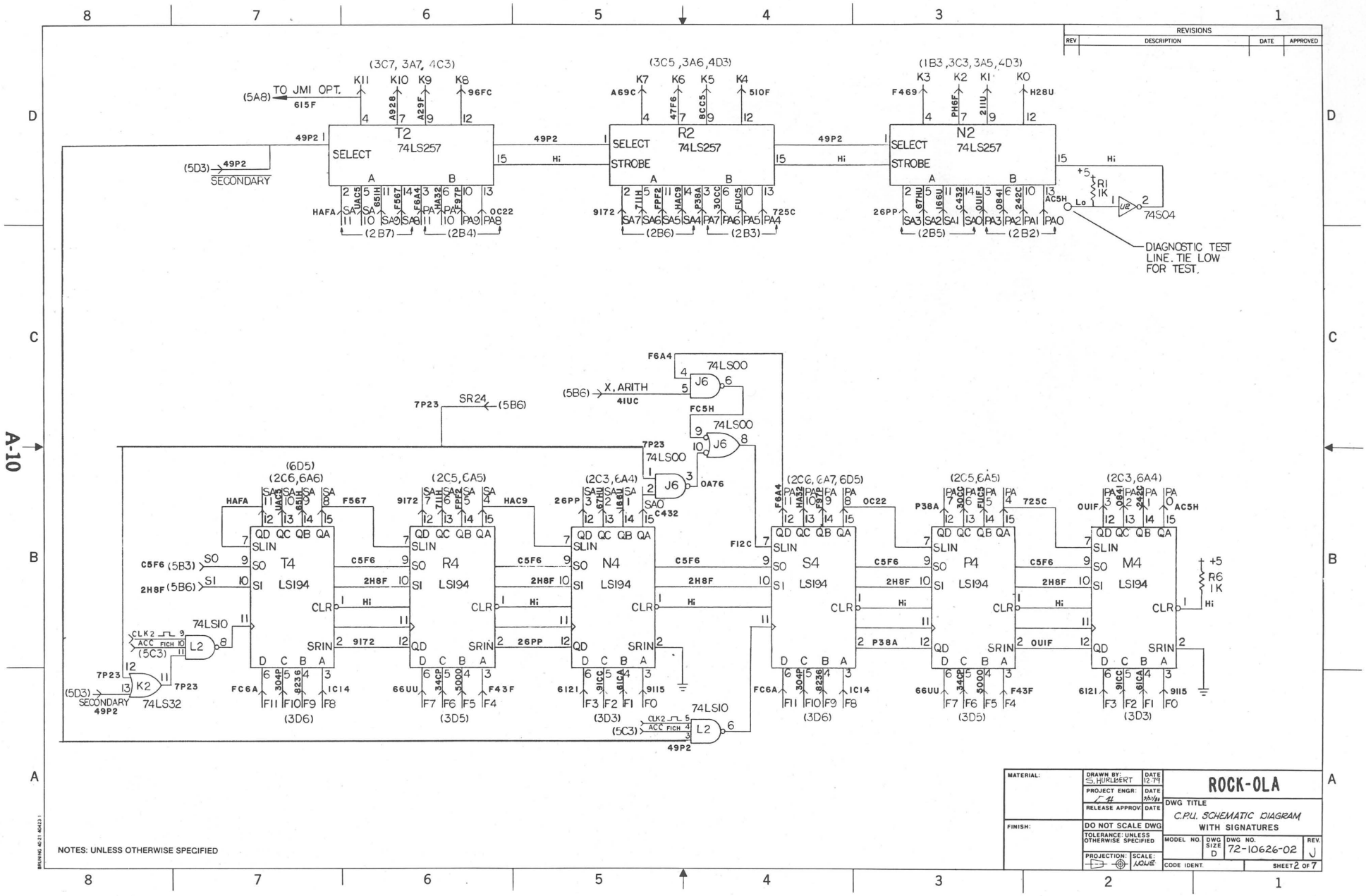
REVISIONS
REV
DESCRIPTION
DATE
APPROVED
(3C7, 3A7, 4C3)
(3C5, 3A6, 4D3)
(1B3, 3C3, 3A5, 4D3)
TO JMI OPT.
615F
(5A8)
T2
74LS257
R2
74LS257
N2
74LS257
SELECT
STROBE
(5D3)
49P2
SECONDARY
R1
1K
74S04
DIAGNOSTIC TEST LINE. TIE LOW FOR TEST.
74LS00
X, ARITH
41UC
(5B6)
SR24
(5B6)
(6D5)
(2C6, 6A6)
(2C5, 6A5)
(2C3, 6A4)
(2C6, 6A7, 6D5)
(2C5, 6A5)
(2C3, 6A4)
T4
R4
N4
S4
P4
M4
LS194
SLIN
SRIN
CLR
74LS10
74LS32
(5C3)
(3D6)
(3D5)
(3D3)
R6
1K
NOTES: UNLESS OTHERWISE SPECIFIED
MATERIAL:
FINISH:
DRAWN BY: S. HURLBERT
DATE 12-79
PROJECT ENGR:
RELEASE APPROV:
DO NOT SCALE DWG
TOLERANCE: UNLESS OTHERWISE SPECIFIED
PROJECTION:
SCALE: NONE
ROCK-OLA
DWG TITLE
C.P.U. SCHEMATIC DIAGRAM WITH SIGNATURES
MODEL NO.
DWG SIZE D
DWG NO. 72-10626-02
REV. J
CODE IDENT.
SHEET 2 OF 7

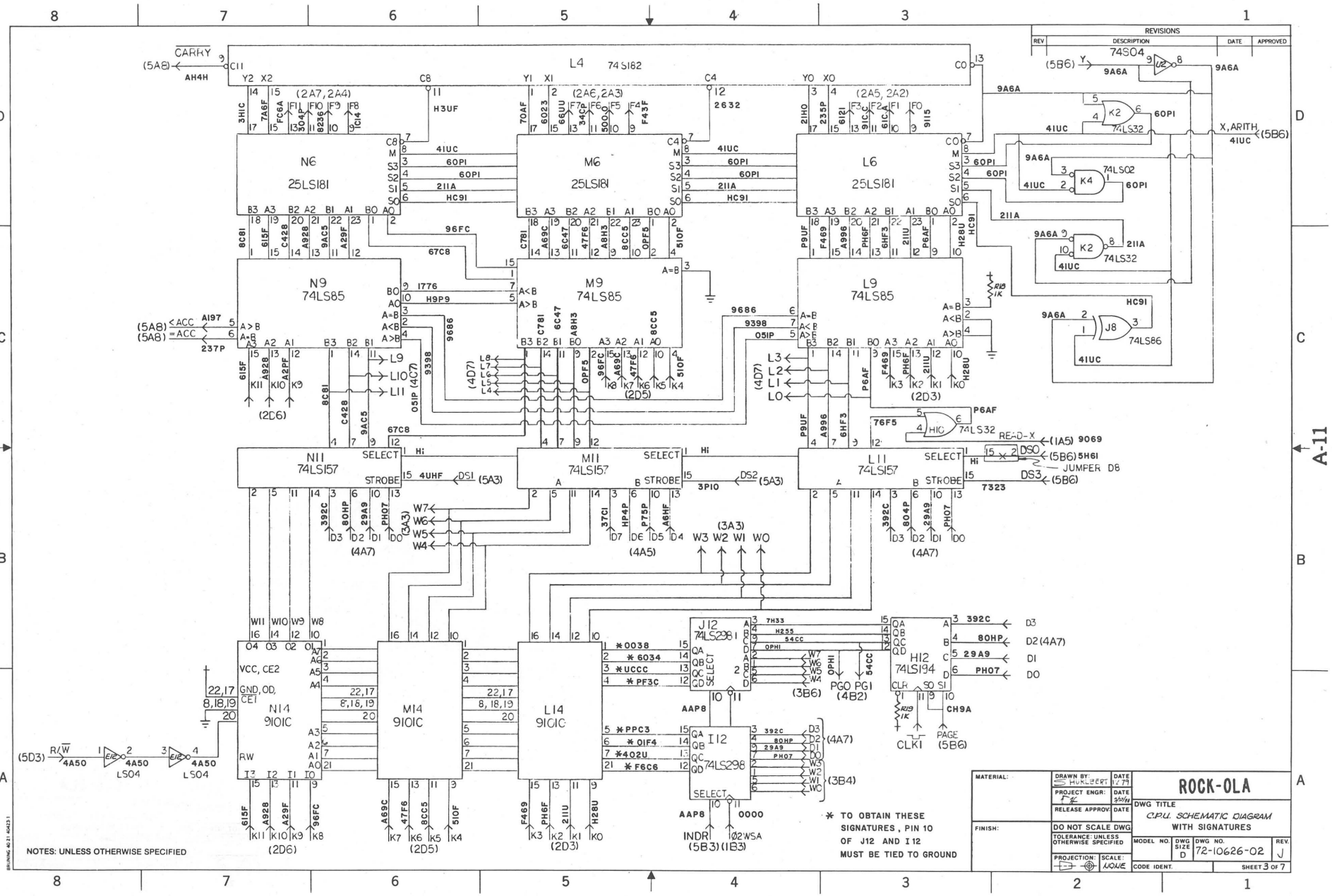
REVISIONS
REV | DESCRIPTION | DATE | APPROVED
L4 74S182
N6 25LS181
M6 25LS181
L6 25LS181
N9 74LS85
M9 74LS85
L9 74LS85
N11 74LS157
M11 74LS157
L11 74LS157
J12 74LS298
I12 74LS298
H12 74LS194
N14 9101C
M14 9101C
L14 9101C
CARRY
X, ARITH
READ-X
JUMPER D8
* TO OBTAIN THESE SIGNATURES, PIN 10 OF J12 AND I12 MUST BE TIED TO GROUND
NOTES: UNLESS OTHERWISE SPECIFIED
ROCK-OLA
C.P.U. SCHEMATIC DIAGRAM WITH SIGNATURES
DWG NO. 72-10626-02
REV. J
SHEET 3 OF 7
A-11

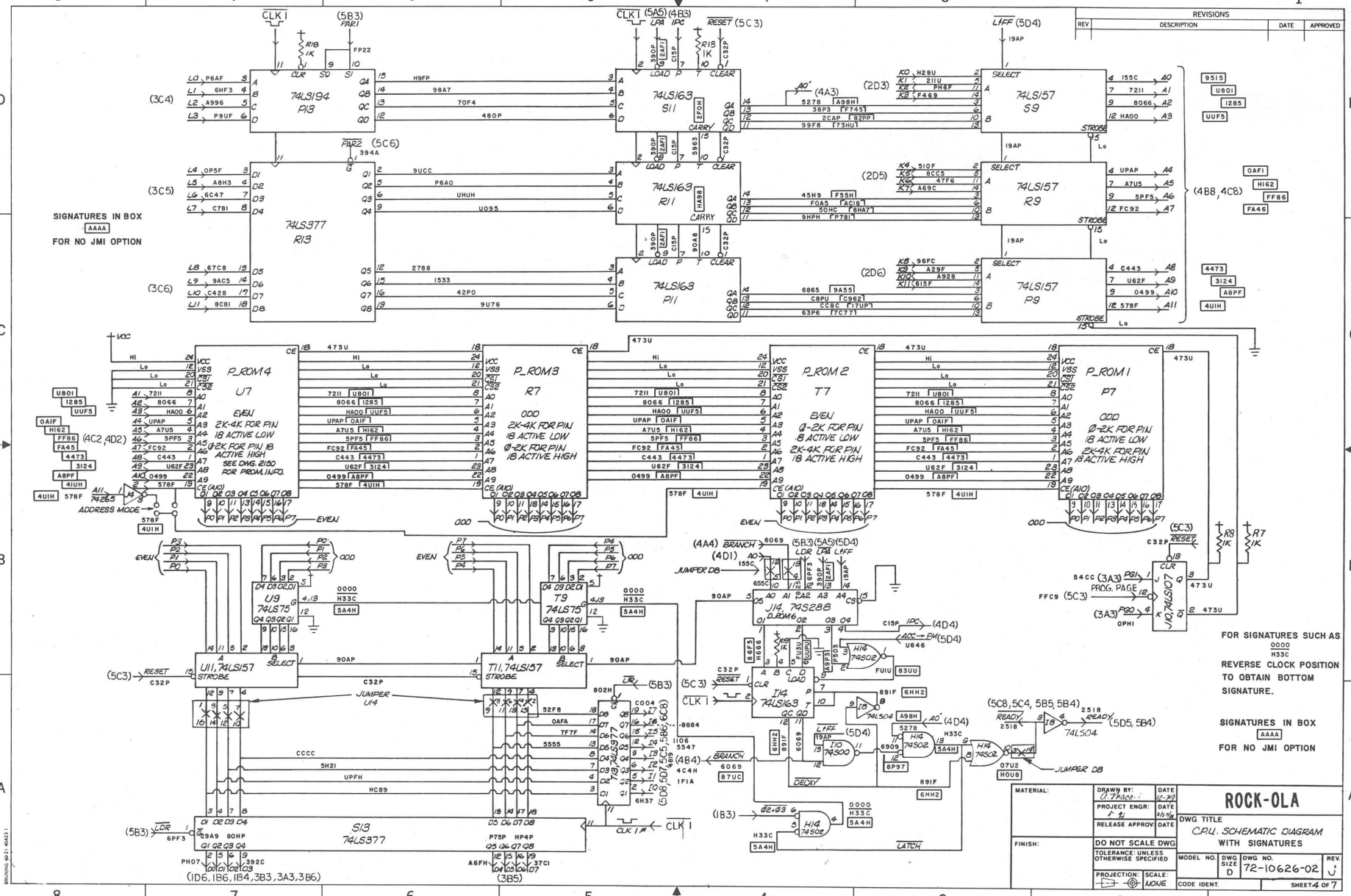

SIGNATURES IN BOX
AAAA
FOR NO JMI OPTION
74LS194 P13
74LS377 R13
74LS163 S11
74LS163 R11
74LS163 P11
74LS157 S9
74LS157 R9
74LS157 P9
P_ROM4 U7 EVEN 2K-4K FOR PIN 18 ACTIVE LOW Ø-2K FOR PIN 18 ACTIVE HIGH SEE DWG. 2150 FOR PROM. INFO.
P_ROM3 R7 ODD 2K-4K FOR PIN 18 ACTIVE LOW Ø-2K FOR PIN 18 ACTIVE HIGH
P_ROM2 T7 EVEN Ø-2K FOR PIN 18 ACTIVE LOW 2K-4K FOR PIN 18 ACTIVE HIGH
P_ROM1 P7 ODD Ø-2K FOR PIN 18 ACTIVE LOW 2K-4K FOR PIN 18 ACTIVE HIGH
U9 74LS75
T9 74LS75
U11, 74LS157
T11, 74LS157
S13 74LS377
T13, 74LS377
J14, 74S288
I14 74LS163
J10, 74LS107
FOR SIGNATURES SUCH AS
0000
H33C
REVERSE CLOCK POSITION TO OBTAIN BOTTOM SIGNATURE.
SIGNATURES IN BOX
AAAA
FOR NO JMI OPTION
REVISIONS
REV
DESCRIPTION
DATE
APPROVED
MATERIAL:
FINISH:
DRAWN BY: O. Thaco
PROJECT ENGR:
RELEASE APPROV:
DO NOT SCALE DWG
TOLERANCE: UNLESS OTHERWISE SPECIFIED
PROJECTION:
SCALE: NONE
ROCK-OLA
DWG TITLE
C.P.U. SCHEMATIC DIAGRAM WITH SIGNATURES
MODEL NO.
DWG SIZE D
DWG NO. 72-10626-02
REV. J
CODE IDENT.
SHEET 4 OF 7

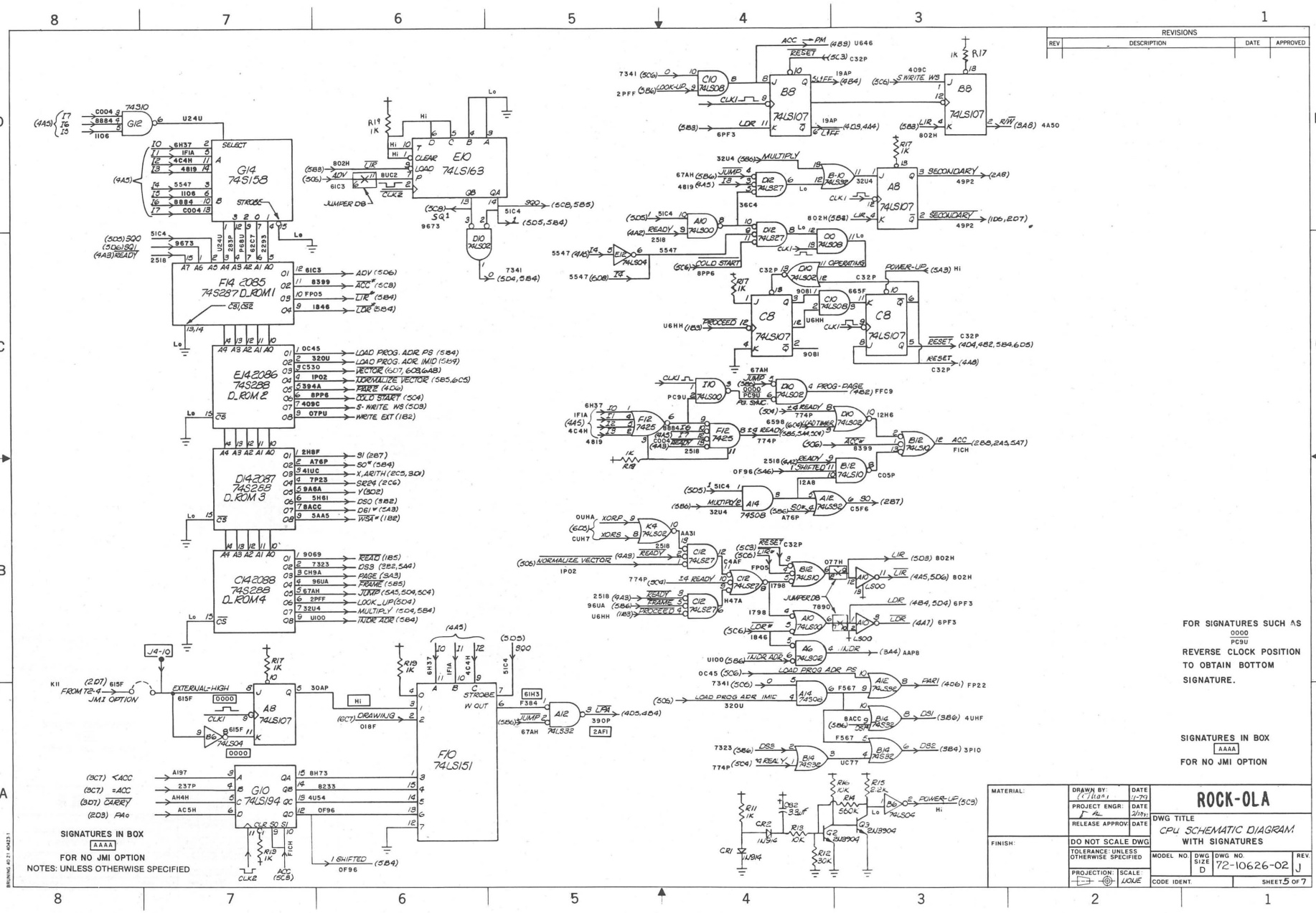

REVISIONS
REV
DESCRIPTION
DATE
APPROVED
FOR SIGNATURES SUCH AS 0000 PC9U REVERSE CLOCK POSITION TO OBTAIN BOTTOM SIGNATURE.
SIGNATURES IN BOX AAAA FOR NO JMI OPTION
SIGNATURES IN BOX AAAA FOR NO JMI OPTION
NOTES: UNLESS OTHERWISE SPECIFIED
MATERIAL:
FINISH:
DRAWN BY:
PROJECT ENGR:
RELEASE APPROV:
DATE
DO NOT SCALE DWG
TOLERANCE: UNLESS OTHERWISE SPECIFIED
PROJECTION:
SCALE: NONE
ROCK-OLA
DWG TITLE
CPU SCHEMATIC DIAGRAM WITH SIGNATURES
MODEL NO.
DWG SIZE D
DWG NO. 72-10626-02
REV. J
CODE IDENT.
SHEET 5 OF 7

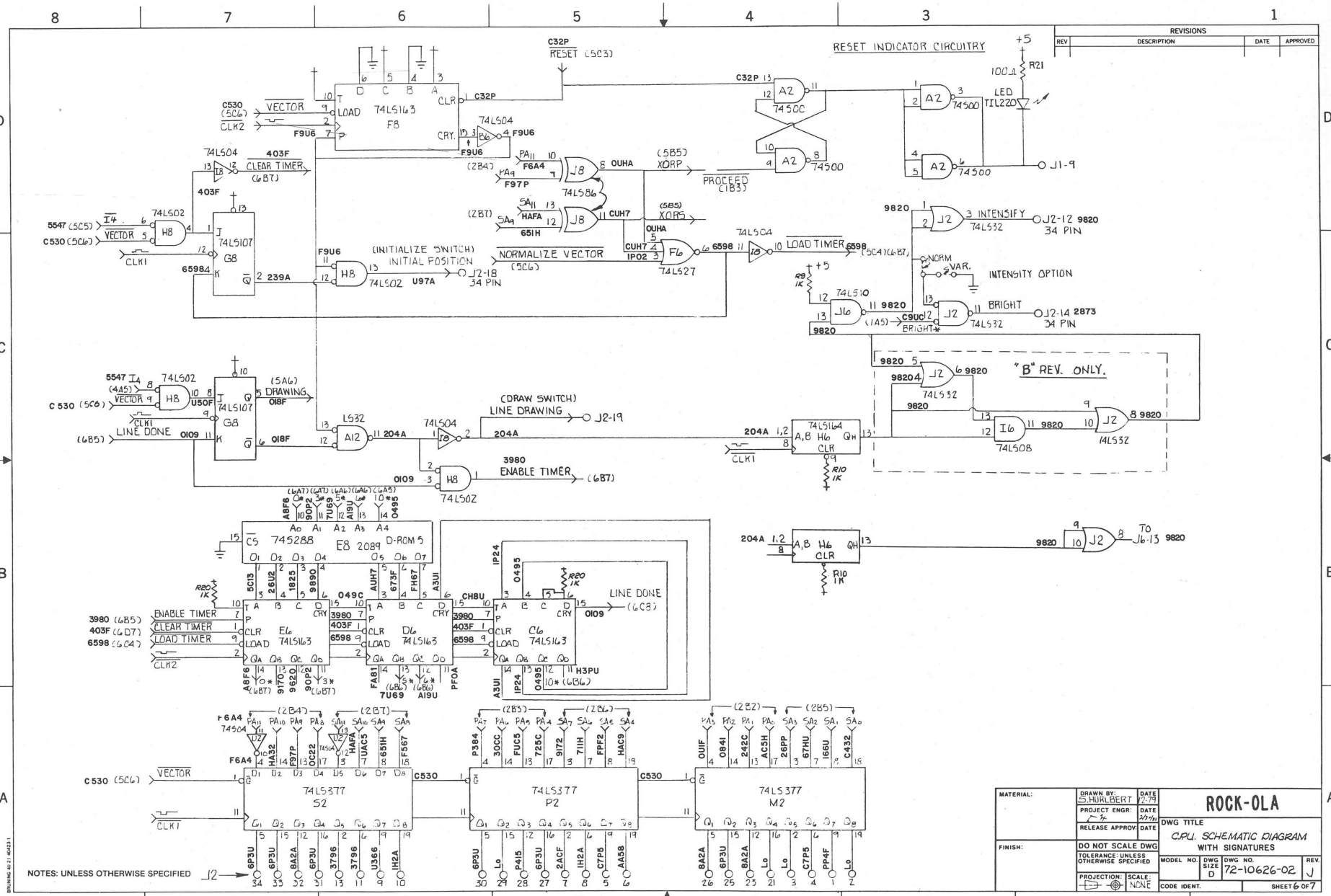
RESET INDICATOR CIRCUITRY
REVISIONS
REV
DESCRIPTION
DATE
APPROVED
C32P
RESET (5C3)
74LS163
F8
74LS04
74LS02
74LS107
G8
74LS86
74LS27
74LS10
74LS32
74LS08
74LS164
74LS377
S2
P2
M2
74500
LED
TIL220
J1-9
J2-12 9820
34 PIN
J2-14 2873
34 PIN
J2-18
34 PIN
J2-19
J2-13
TO
J6-13 9820
(INITIALIZE SWITCH)
INITIAL POSITION
NORMALIZE VECTOR
(5C6)
LOAD TIMER
(5C4)(6B7)
INTENSIFY
INTENSITY OPTION
BRIGHT
"B" REV. ONLY.
(DRAW SWITCH)
LINE DRAWING
ENABLE TIMER
(6B7)
LINE DONE
(6C8)
CLEAR TIMER
(6B7)
VECTOR
CLK1
CLK2
NOTES: UNLESS OTHERWISE SPECIFIED
MATERIAL:
FINISH:
DRAWN BY: S. HURLBERT
DATE 12-79
PROJECT ENGR:
RELEASE APPROV:
DO NOT SCALE DWG
TOLERANCE: UNLESS OTHERWISE SPECIFIED
PROJECTION:
SCALE: NONE
ROCK-OLA
DWG TITLE
C.P.U. SCHEMATIC DIAGRAM
WITH SIGNATURES
MODEL NO.
DWG SIZE D
DWG NO. 72-10626-02
REV. J
CODE IDENT.
SHEET 6 OF 7

REVISIONS			
REV	DESCRIPTION	DATE	APPROVED

CONNECTOR J1

PIN NO.	FUNCTION	FROM / TO IC - PIN NO.	SCHMTC LOCATION SHT-AREA
1	NC		
2	NC		
3	COIN COUNTER	FROM COLLECTOR OF Q1	1-C4
4 (FEMALE)	GND		
5	GND		
6	GND		
7	NC		
8	NC		
9	LED CATHODE	FROM A2-3,6	6-D3
10	+5		
11	+5		
12	NC		

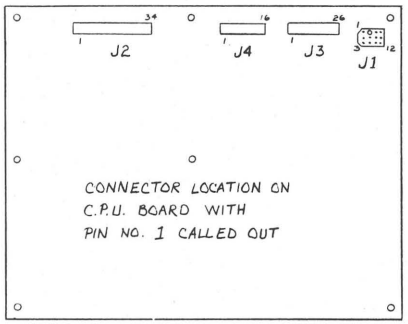

CONNECTOR J2

PIN NO.	FUNCTION	FROM / TO IC - PIN NO.	SCHMTC LOCATION SHT-AREA
1	YDAC BIT 1	FROM M2-9	6-A4
2	YDAC BIT Ø	FROM M2-19	
3	YDAC BIT 3	FROM M2-2	
4	YDAC BIT 2	FROM M2-6	
5	YDAC BIT 5	FROM P2-9	6-A5
6	YDAC BIT 4	FROM P2-19	
7	YDAC BIT 7	FROM P2-2	
8	YDAC BIT 6	FROM P2-6	
9	YDAC BIT 9	FROM S2-9	6-A6
10	YDAC BIT 8	FROM S2-19	
11	YDAC BIT 10	FROM S2-6	
12	INTENSITY	FROM J2-3	6-D3
13	YDAC BIT 11	FROM S2-2	6-A6
14	BRIGHT	FROM J2-11	6-C3
15	GND		
16	XDAC OUTPUT	FROM DISPLAY PCB TO CONN. J4-4	
17	GND		
18	INITIALIZE SWITCH	FROM H8-13	6-C6
19	DRAW SWITCH	FROM I8-2	6-C5
20	GND		
21	XDAC BIT Ø	FROM M2-16	6-A4
22	GND		
23	XDAC BIT 1	FROM M2-12	
24	GND		
25	XDAC BIT 2	FROM M2-15	
26	XDAC BIT 3	FROM M2-5	
27	XDAC BIT 4	FROM P2-16	6-A5
28	XDAC BIT 5	FROM P2-12	
29	XDAC BIT 6	FROM P2-15	
30	XDAC BIT 7	FROM P2-5	
31	XDAC BIT 8	FROM S2-16	6-A6
32	XDAC BIT 9	FROM S2-12	
33	XDAC BIT 10	FROM S2-15	
34	XDAC BIT 11	FROM S2-5	

CONNECTOR J3

PIN NO.	FUNCTION	FROM / TO IC - PIN NO.	SCHMTC LOCATION SHT-AREA
1	NC		
2	+5		
3	SECONDARY INPUT Ø	TO E4-4	1-C6
4	SECONDARY INPUT 3	TO E4-1	
5	SECONDARY INPUT 2	TO E4-2	
6	SECONDARY INPUT 1	TO E4-3	
7	SECONDARY INPUT 6	TO E4-13	
8	PRIMARY INPUT 3	TO D4-1	1-B6
9	PRIMARY INPUT 2	TO D4-2	
10	PRIMARY INPUT 1	TO D4-3	
11	PRIMARY INPUT Ø	TO D4-4	
12	PRIMARY INPUT 7	TO D4-12	
13	PRIMARY INPUT 6	TO D4-13	
14	PRIMARY INPUT 5	TO D4-14	
15	PRIMARY INPUT 4	TO D4-15	
16	PRIMARY INPUT 11	TO C4-1	1-A6
17	PRIMARY INPUT 10	TO C4-2	
18	PRIMARY INPUT 9	TO C4-3	
19	PRIMARY INPUT 8	TO C4-4	
20	PRIMARY INPUT 12	TO C4-15 CONN. J4-3	
21	PRIMARY INPUT 13	TO C4-14 CONN. J4-1	
22	PRIMARY INPUT 14	TO C4-13 CONN J4-5	
23	PRIMARY INPUT 15	TO C4-12 CONN. J4-2	
24	COIN SWITCH (NORMALY CLOSED)	TO A4-5	1-D5
25	COIN SWITCH (NORMALY OPEN)	TO A4-1	
26	GND		

CONNECTOR J4

PIN NO.	FUNCTION	FROM / TO IC- PIN NO.	SCHMTC LOCATION SHT-AREA
1	PRIMARY INPUT 13	TO C4-14 CONN. J3-21	1-A6
2	PRIMARY INPUT 15	TO C4-12 CONN. J3-23	
3	PRIMARY INPUT 12	TO C4-15 CONN. J3-20	
4	XDAC OUTPUT	FROM DISPLAY PCB TO CONN. J2-16	
5	PRIMARY INPUT 14	TO C4-13 CONN. J3-22	1-A6
6	NC		
7	NC		
8	GND		
9	NC		
10	EXTERNAL HIGH OUTPUT	TO A8-8 B6-9	5-A7
11	OUTPUT Ø	FROM F2-4	1-B4
12	OUTPUT 1	FROM F2-5	
13	OUTPUT 2	FROM F2-6	
14	OUTPUT 3	FROM F2-7	
15	OUTPUT 4	FROM F2-9	
16	OUTPUT 7	FROM F2-12	

A-15

NOTES: UNLESS OTHERWISE SPECIFIED

4 JUNE 1980

MATERIAL:	DRAWN BY: davescott	DATE	ROCK-OLA
	PROJECT ENGR:	DATE	
	RELEASE APPROV:	DATE	DWG TITLE: C.P.U. SCHEMATIC
FINISH:	DO NOT SCALE DWG		
	TOLERANCE: UNLESS OTHERWISE SPECIFIED		MODEL NO. / DWG SIZE D / DWG NO. 72-10626-02 / REV.
	PROJECTION:	SCALE:	CODE IDENT. / SHEET 7 OF 7

BRUNING 40-31 40423-1

REVISIONS			
REV	DESCRIPTION	DATE	APPROVED

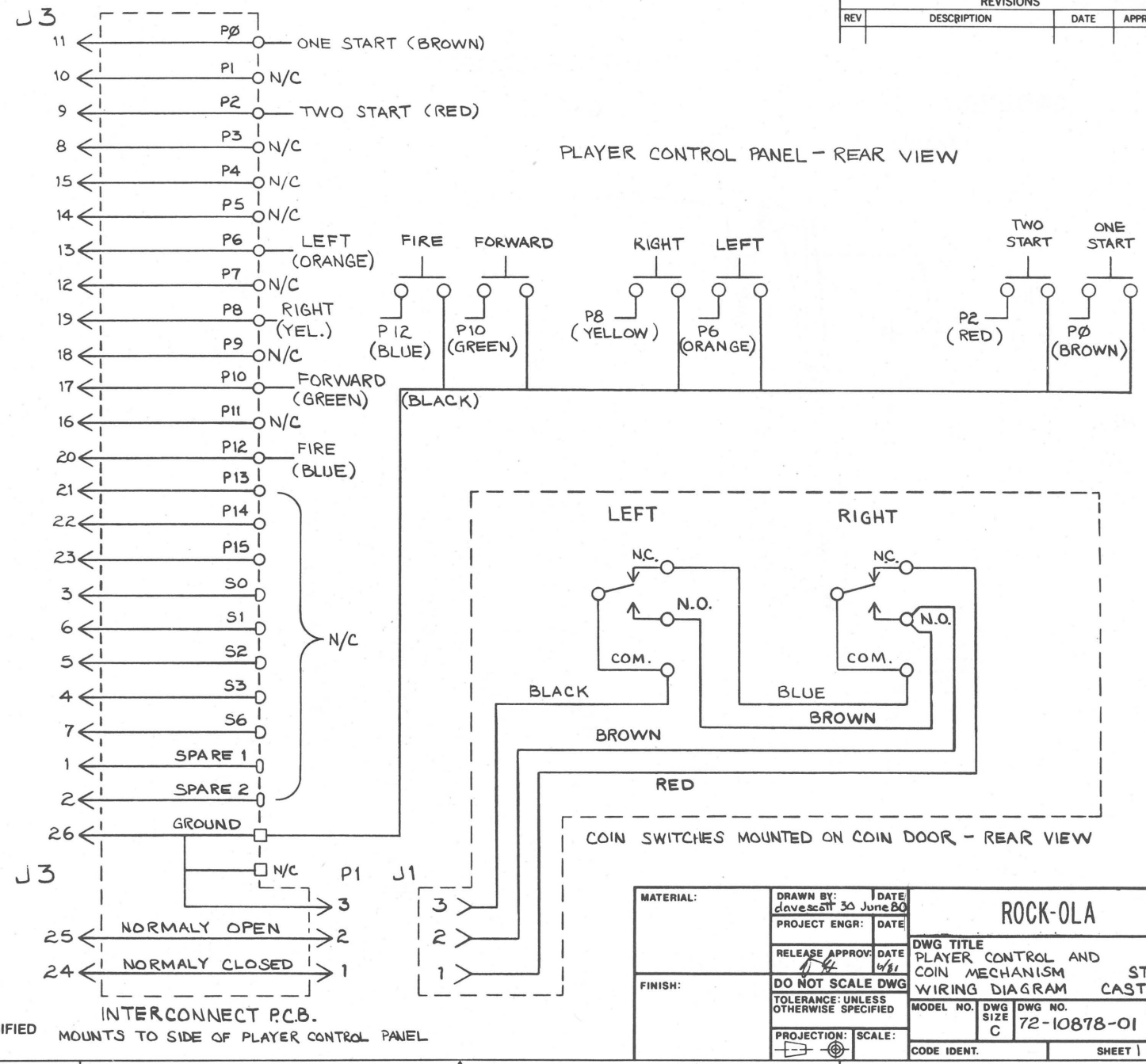

NOTES: UNLESS OTHERWISE SPECIFIED

MATERIAL:	DRAWN BY: davescott 30 June 80	DATE	ROCK-OLA
	PROJECT ENGR:	DATE	
	RELEASE APPROV:	DATE 6/81	DWG TITLE PLAYER CONTROL AND COIN MECHANISM WIRING DIAGRAM STAR CASTLE
FINISH:	DO NOT SCALE DWG		
	TOLERANCE: UNLESS OTHERWISE SPECIFIED		MODEL NO. / DWG SIZE C / DWG NO. 72-10878-01 / REV.
	PROJECTION:	SCALE:	CODE IDENT. / SHEET 1 OF 1

BRUNING 40-21 40423-1

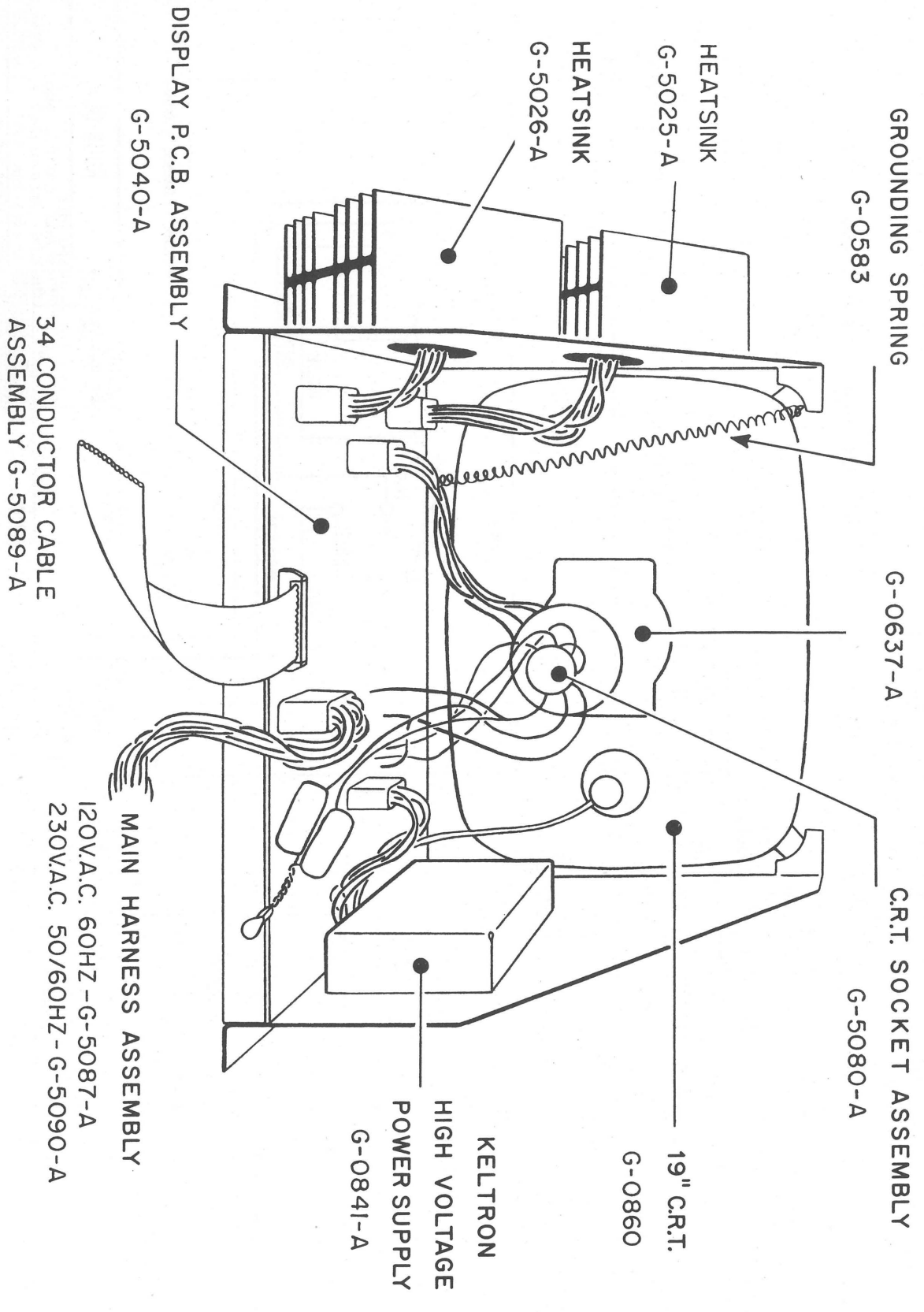

MONITOR ASSEMBLY (KELTRON)

G-5015-A

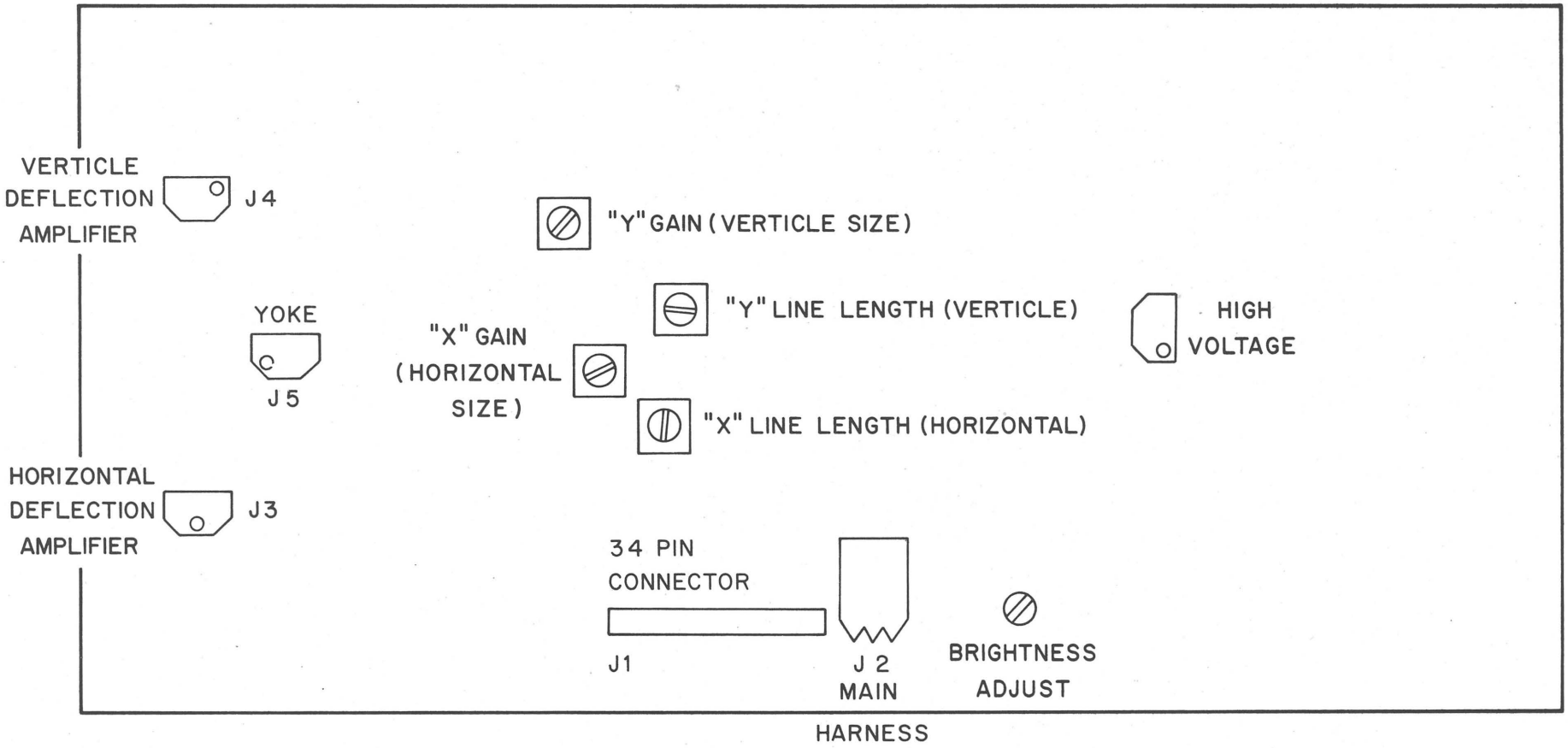

DISPLAY P.C.B.

CONNECTORS AND ADJUSTMENTS

REVISIONS			
REV	DESCRIPTION	DATE	APPROVED
B	PER ECR 058	9 MAY 80	

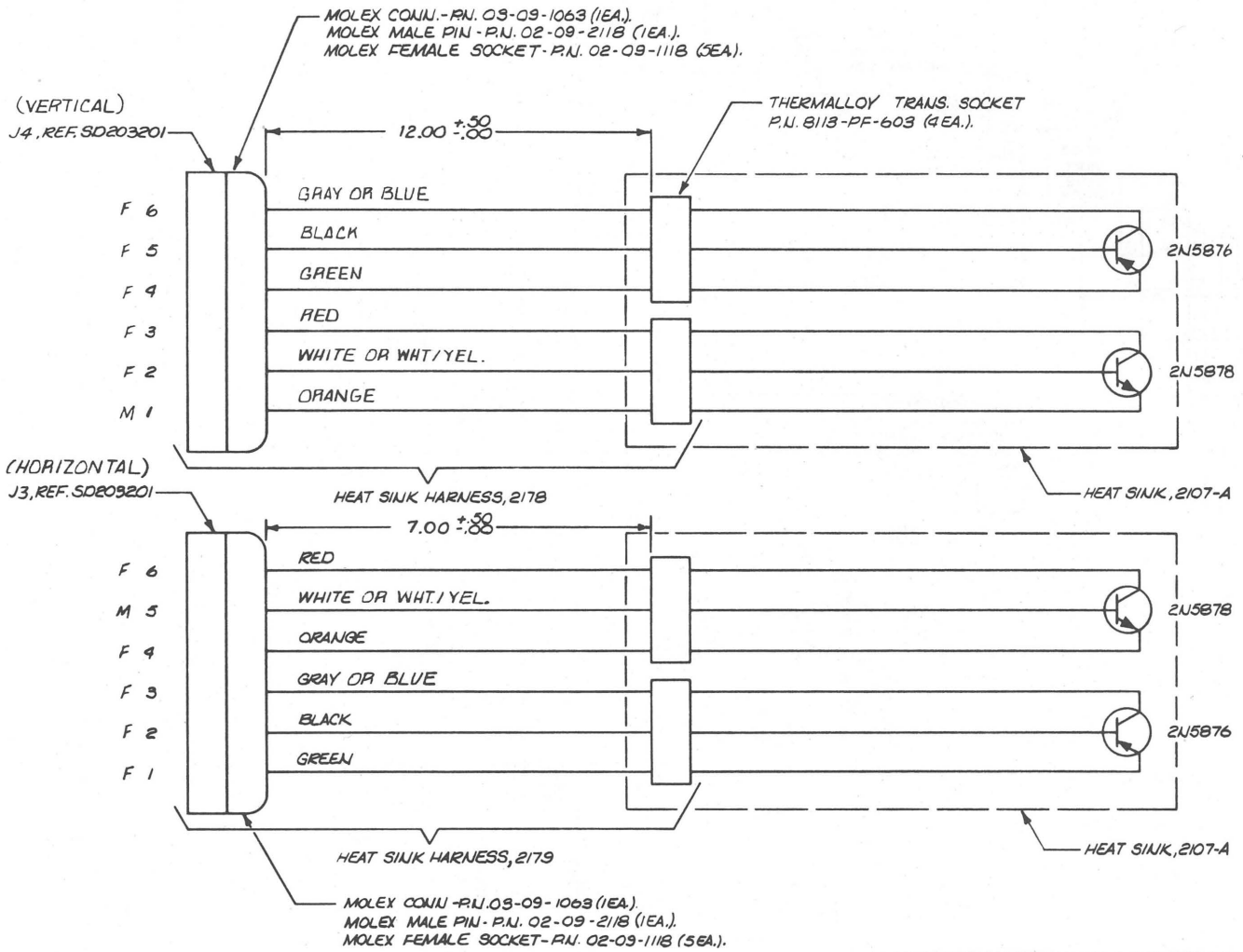

NOTES: UNLESS OTHERWISE SPECIFIED

MATERIAL:	DRAWN BY: A. Thacker	DATE 8-7-79	ROCK-OLA
	PROJECT ENGR: C. Williams	DATE 8-7-79	DWG TITLE SCHEMATIC, VERTICAL & HORIZONTAL HEAT SINK ASSY.
FINISH: BREAK ALL SHARP EDGES AND DEBURR ALL HOLES.	RELEASE APPROV: C.E. [illegible]	DATE 8-7-79	
	DO NOT SCALE DWG		MODEL NO. / DWG SIZE C / DWG NO. 72-10969-01 / REV. B
	TOLERANCE: UNLESS OTHERWISE SPECIFIED		
	PROJECTION:	SCALE: NONE	CODE IDENT. / SHEET / OF /

BRUNING 40-21 4023

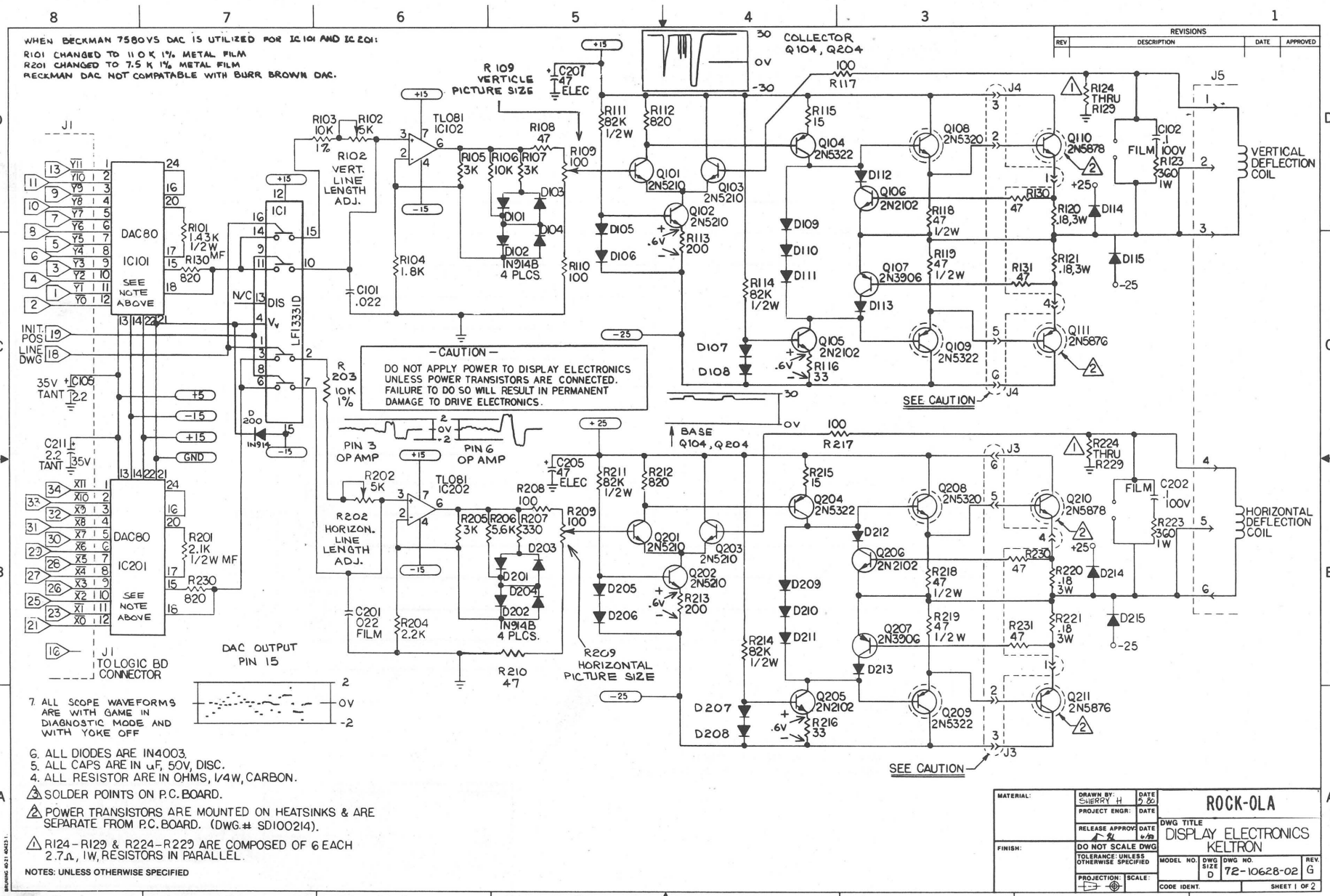
WHEN BECKMAN 7580VS DAC IS UTILIZED FOR IC101 AND IC201:
R101 CHANGED TO 11.0 K 1% METAL FILM
R201 CHANGED TO 7.5 K 1% METAL FILM
BECKMAN DAC NOT COMPATABLE WITH BURR BROWN DAC.
COLLECTOR Q104, Q204
R 109 VERTICLE PICTURE SIZE
R102 VERT. LINE LENGTH ADJ.
R202 HORIZON. LINE LENGTH ADJ.
R209 HORIZONTAL PICTURE SIZE
DAC80 IC101 SEE NOTE ABOVE
DAC80 IC201 SEE NOTE ABOVE
LF13331D
TL081 IC102
TL081 IC202
INIT. POS LINE DWG
35V TANT
C211 2.2 TANT
J1 TO LOGIC BD CONNECTOR
DAC OUTPUT PIN 15
PIN 3 OP AMP
PIN 6 OP AMP
BASE Q104, Q204
VERTICAL DEFLECTION COIL
HORIZONTAL DEFLECTION COIL
SEE CAUTION
SEE CAUTION
- CAUTION -
DO NOT APPLY POWER TO DISPLAY ELECTRONICS UNLESS POWER TRANSISTORS ARE CONNECTED. FAILURE TO DO SO WILL RESULT IN PERMANENT DAMAGE TO DRIVE ELECTRONICS.
7. ALL SCOPE WAVEFORMS ARE WITH GAME IN DIAGNOSTIC MODE AND WITH YOKE OFF
6. ALL DIODES ARE IN4003.
5. ALL CAPS ARE IN uF, 50V, DISC.
4. ALL RESISTOR ARE IN OHMS, 1/4W, CARBON.
3. SOLDER POINTS ON P.C. BOARD.
2. POWER TRANSISTORS ARE MOUNTED ON HEATSINKS & ARE SEPARATE FROM P.C. BOARD. (DWG.# SD100214).
1. R124-R129 & R224-R229 ARE COMPOSED OF 6 EACH 2.7Ω, 1W, RESISTORS IN PARALLEL.
NOTES: UNLESS OTHERWISE SPECIFIED
REVISIONS
REV DESCRIPTION DATE APPROVED
MATERIAL:
FINISH:
DRAWN BY: SHERRY H
DATE 5.80
PROJECT ENGR:
RELEASE APPROV:
DO NOT SCALE DWG
TOLERANCE: UNLESS OTHERWISE SPECIFIED
PROJECTION:
SCALE:
ROCK-OLA
DWG TITLE DISPLAY ELECTRONICS KELTRON
MODEL NO.
DWG SIZE D
DWG NO. 72-10628-02
REV. G
CODE IDENT.
SHEET 1 OF 2

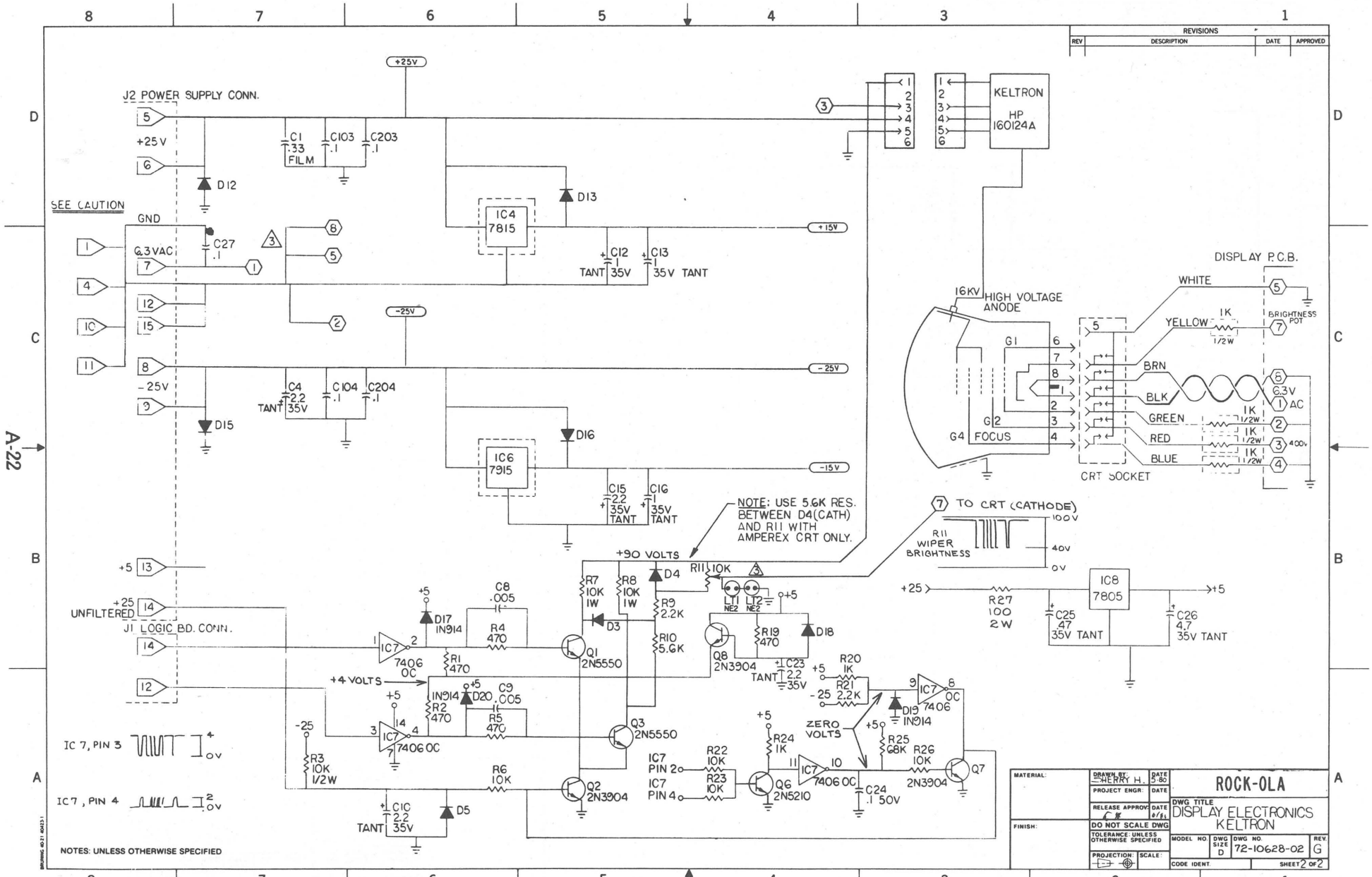
REVISIONS
REV | DESCRIPTION | DATE | APPROVED
J2 POWER SUPPLY CONN.
+25V
+25 V
GND
6.3VAC
-25V
SEE CAUTION
C1 .33 FILM
C103 .1
C203 .1
C27 .1
C4 2.2 TANT 35V
C104 .1
C204 .1
D12
D13
D15
D16
IC4 7815
IC6 7915
+15V
-15V
C12 1 TANT 35V
C13 1 35V TANT
C15 2.2 35V TANT
C16 1 35V TANT
KELTRON HP 160124A
DISPLAY P.C.B.
16KV HIGH VOLTAGE ANODE
G1
G2 FOCUS
G4
WHITE
YELLOW
BRN
BLK
GREEN
RED
BLUE
1K 1/2W
BRIGHTNESS POT
6.3V AC
400v
CRT SOCKET
NOTE: USE 5.6K RES. BETWEEN D4(CATH) AND R11 WITH AMPEREX CRT ONLY.
+90 VOLTS
R11 10K
R7 10K 1W
R8 10K 1W
R9 2.2K
R10 5.6K
D4
D3
Q1 2N5550
Q8 2N3904
R19 470
D18
C23 2.2 TANT 35V
LT1 NE2
LT2 NE2
TO CRT (CATHODE)
100V
40V
0V
R11 WIPER BRIGHTNESS
R27 100 2W
IC8 7805
C25 .47 35V TANT
C26 4.7 35V TANT
+25 UNFILTERED
J1 LOGIC BD. CONN.
+5
+4 VOLTS
IC7 7406 OC
R1 470
R2 470
R3 10K 1/2W
R4 470
R5 470
R6 10K
C8 .005
C9 .005
C10 2.2 TANT 35V
D17 IN914
D20 IN914
D5
Q2 2N3904
Q3 2N5550
IC7, PIN 3
IC7, PIN 4
R20 1K
R21 2.2K
D19 IN914
ZERO VOLTS
R22 10K
R23 10K
IC7 PIN 2
IC7 PIN 4
Q6 2N5210
R24 1K
R25 68K
R26 10K
Q7 2N3904
C24 .1 50V
NOTES: UNLESS OTHERWISE SPECIFIED
MATERIAL:
FINISH:
DRAWN BY: HERRY H.
PROJECT ENGR:
RELEASE APPROV:
DO NOT SCALE DWG
TOLERANCE: UNLESS OTHERWISE SPECIFIED
PROJECTION:
SCALE:
DATE 5-80
ROCK-OLA
DWG TITLE DISPLAY ELECTRONICS KELTRON
MODEL NO.
DWG SIZE D
DWG NO. 72-10628-02
REV. G
CODE IDENT.
SHEET 2 OF 2
A-22

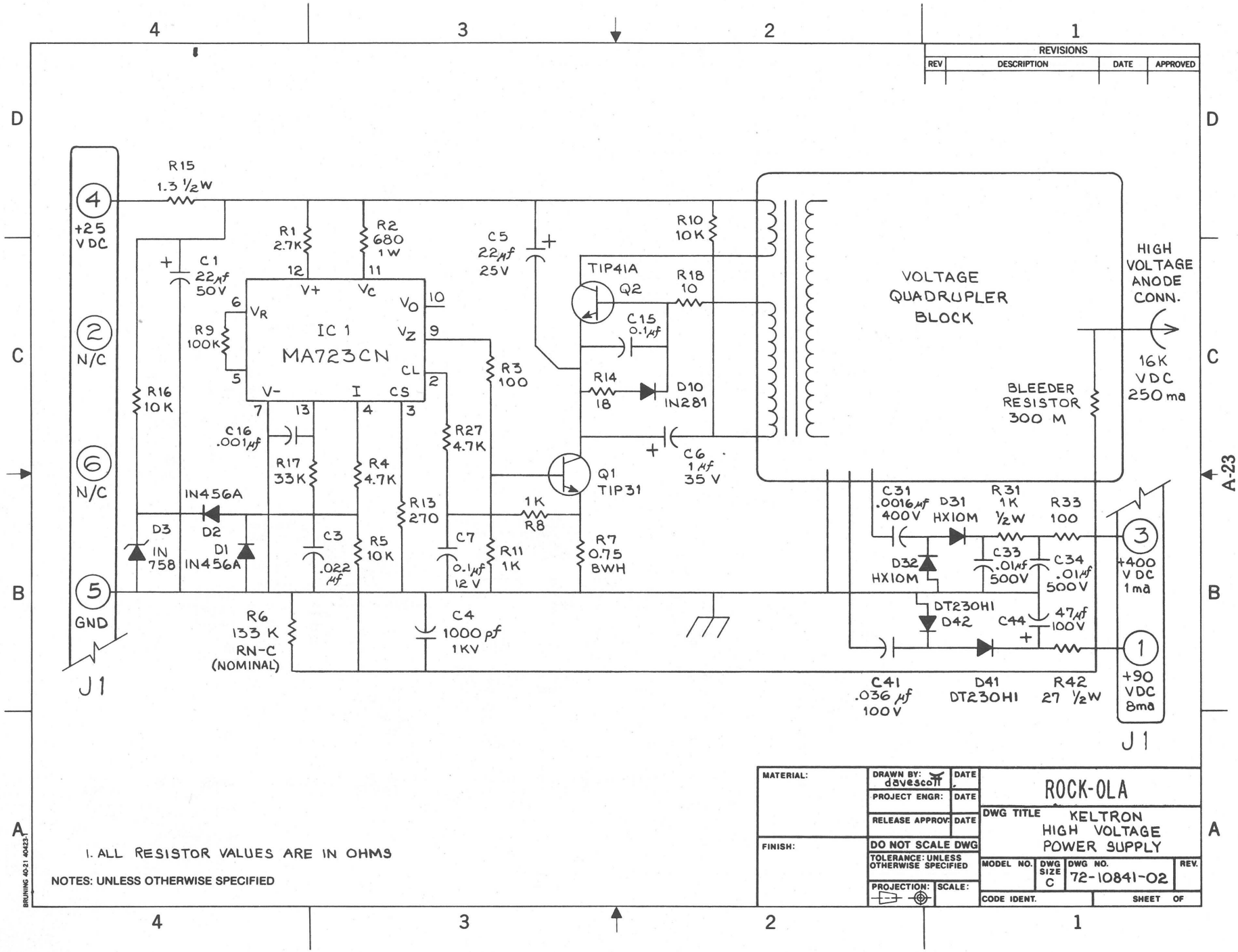
REVISIONS
REV
DESCRIPTION
DATE
APPROVED
R15
1.3 ½W
+25 VDC
N/C
N/C
GND
J1
C1
22µf
50V
R1
2.7K
R2
680
1W
IC 1
MA723CN
V+
Vc
VR
V-
I
CS
VO
VZ
CL
R9
100K
R16
10K
C16
.001µf
R17
33K
R4
4.7K
R13
270
R27
4.7K
R3
100
C5
22µf
25V
TIP41A
Q2
R10
10K
R18
10
C15
0.1µf
R14
18
D10
IN281
C6
1µf
35 V
Q1
TIP31
1K
R8
R7
0.75
BWH
R11
1K
C7
0.1µf
12 V
C3
.022
µf
R5
10K
IN456A
D2
D1
IN456A
D3
IN
758
R6
133 K
RN-C
(NOMINAL)
C4
1000 pf
1KV
VOLTAGE
QUADRUPLER
BLOCK
HIGH
VOLTAGE
ANODE
CONN.
16K
VDC
250 ma
BLEEDER
RESISTOR
300 M
C31
.0016µf
400V
D31
HX10M
R31
1K
½W
R33
100
D32
HX10M
C33
.01µf
500V
C34
.01µf
500V
DT230H1
D42
C44
47µf
100V
C41
.036 µf
100V
D41
DT230H1
R42
27 ½W
3
+400
V DC
1 ma
1
+90
VDC
8ma
J1
A-23
1. ALL RESISTOR VALUES ARE IN OHMS
NOTES: UNLESS OTHERWISE SPECIFIED
MATERIAL:
FINISH:
DRAWN BY: davescott
DATE
PROJECT ENGR:
RELEASE APPROV:
DO NOT SCALE DWG
TOLERANCE: UNLESS OTHERWISE SPECIFIED
PROJECTION:
SCALE:
ROCK-OLA
DWG TITLE KELTRON
HIGH VOLTAGE
POWER SUPPLY
MODEL NO.
DWG SIZE C
DWG NO. 72-10841-02
REV.
CODE IDENT.
SHEET OF
BRUNING 40-21 40423.1

REVISIONS			
REV	DESCRIPTION	DATE	APPROVED

R1	2.7 K
R2	680 1W
R3	100
R4	4.7 K
R5	10 K
R6	133 K RN-C (NOMINAL)
R7	0.75 BWH
R8	1K
R9	100 K
R10	10 K
R11	1 K
R13	270
R14	18
R15	1.3 1/2 W
R16	10 K
R17	33K
R18	10
R27	4.7 K
R31	1K 1/2 W
R33	100
R42	27 1/2 W

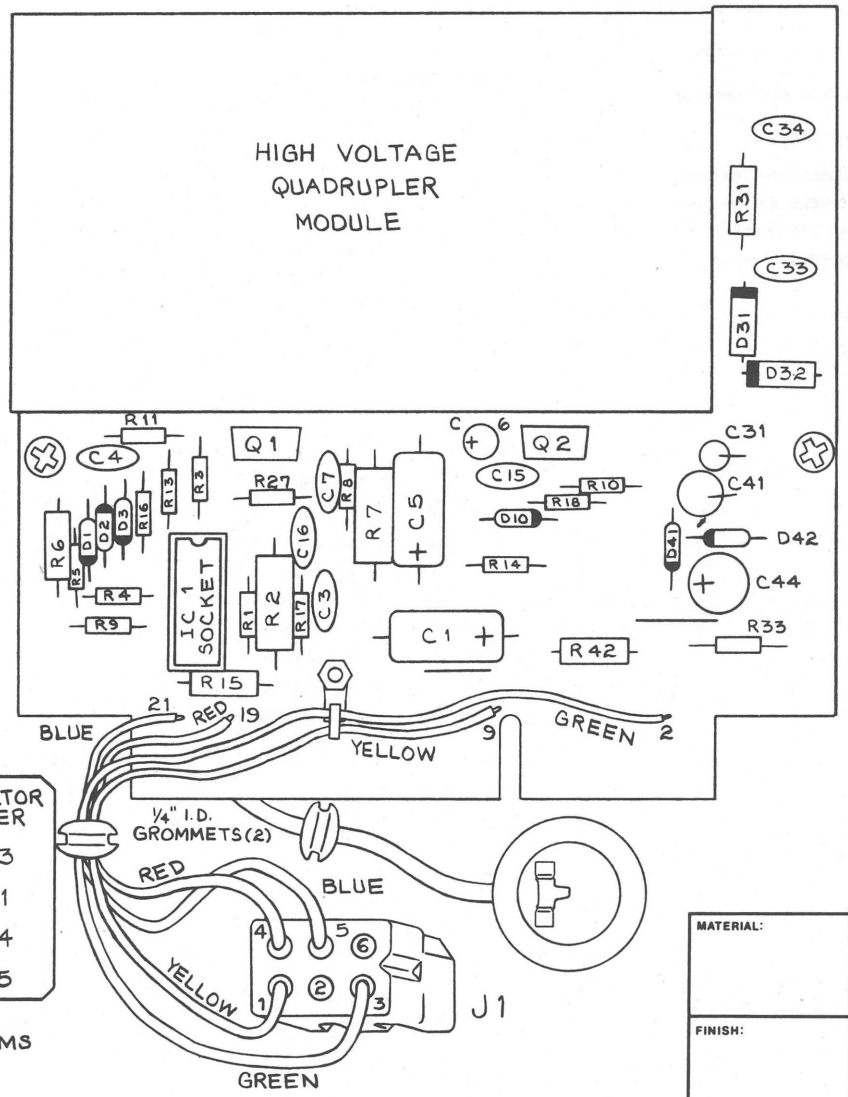

P.C.B HOLE NUMBER	WIRE	CONNECTOR NUMBER
2	GREEN	3
9	YELLOW	1
19	RED	4
21	BLUE	5

1. RESISTOR VALUES IN OHMS

NOTES: UNLESS OTHERWISE SPECIFIED

C1	22 μf 50 V
C3	0.022 μf
C4	1000 pf 1 KV
C5	22 μf 25 V
C6	1 μf 35 V
C7	0.1 μf 12 V
C15	0.1 μf 12 V
C16	.001 μf
C31	.0016 μf 400 V
C33	.01 μf 500 V
C34	.01 μf 500 V
C41	.036 μf 100 V
C44	47 μf 100 V
D1	IN456A
D2	IN456A
D3	IN758
D10	IN281
D31	HX10M
D32	HX10M
D41	DT230HI
D42	DT230HI
J1	03-09-1063
Q1	TIP 31
Q2	TIP 41
IC1	MA 723 CN

MATERIAL:	DRAWN BY: davesco	DATE	ROCK-OLA
	PROJECT ENGR:	DATE	DWG TITLE KELTRON HIGH VOLTAGE POWER SUPPLY
	RELEASE APPROV:	DATE	
FINISH:	DO NOT SCALE DWG		MODEL NO. / DWG SIZE C / DWG NO. 72-10841-01 / REV.
	TOLERANCE: UNLESS OTHERWISE SPECIFIED		CODE IDENT. / SHEET OF
	PROJECTION:	SCALE:	

BRUNING 40-21 40423-1

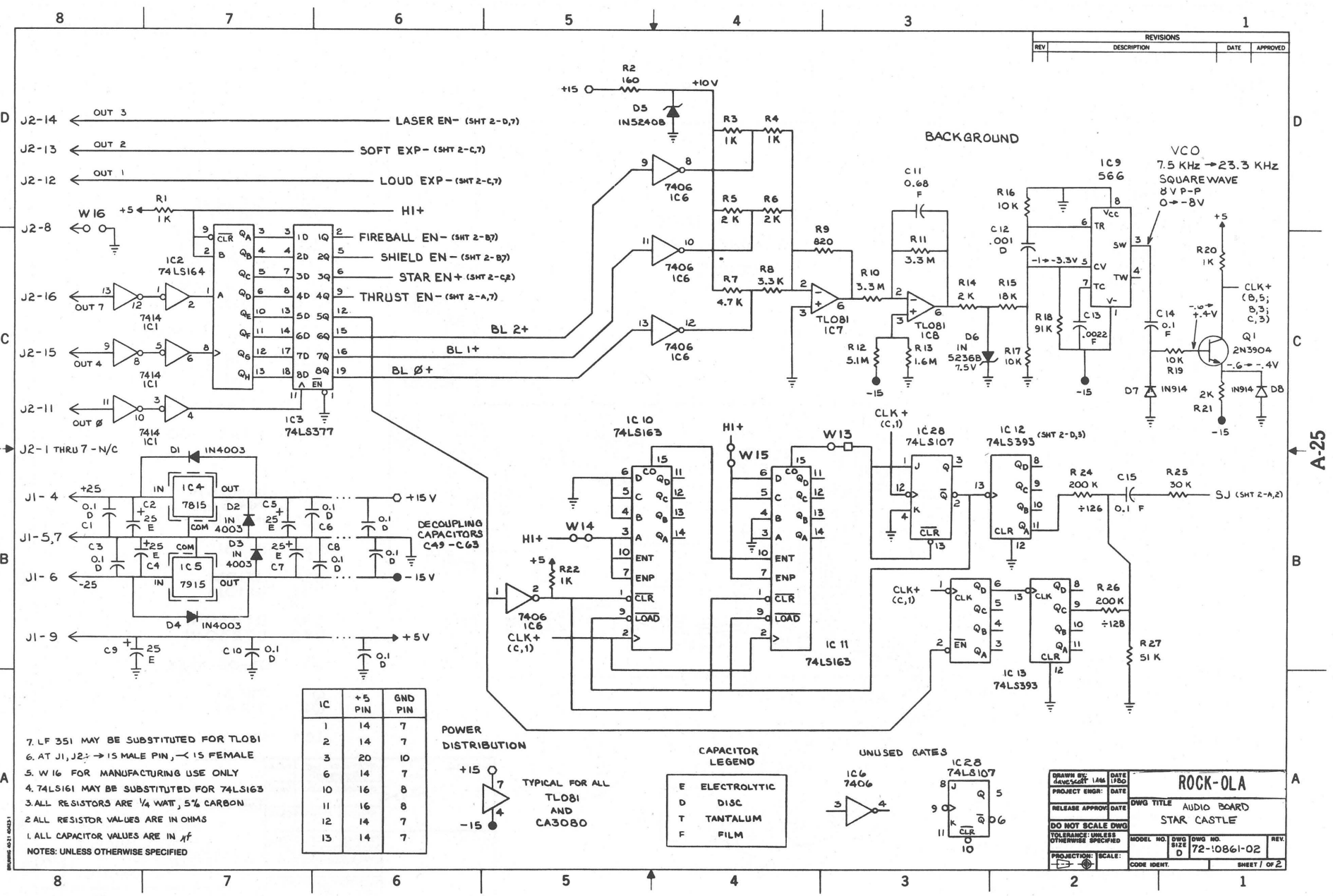
REVISIONS
REV DESCRIPTION DATE APPROVED
J2-14 OUT 3 LASER EN- (SHT 2-D,7)
J2-13 OUT 2 SOFT EXP- (SHT 2-C,7)
J2-12 OUT 1 LOUD EXP- (SHT 2-C,7)
J2-8 HI+
J2-16 OUT 7
J2-15 OUT 4
J2-11 OUT Ø
J2-1 THRU 7 - N/C
FIREBALL EN- (SHT 2-B,7)
SHIELD EN- (SHT 2-B,7)
STAR EN+ (SHT 2-C,2)
THRUST EN- (SHT 2-A,7)
BL 2+
BL 1+
BL Ø+
BACKGROUND
VCO
7.5 KHz → 23.3 KHz
SQUARE WAVE
8 V P-P
0 → -8V
IC1 7414
IC2 74LS164
IC3 74LS377
IC4 7815
IC5 7915
IC6 7406
IC7 TL081
IC8 TL081
IC9 566
IC10 74LS163
IC11 74LS163
IC12 74LS393 (SHT 2-D,3)
IC13 74LS393
IC28 74LS107
D1 IN4003
D2 IN4003
D3 IN4003
D4 IN4003
D5 IN5240B
D6 IN 5236B 7.5V
D7 IN914
D8 IN914
Q1 2N3904
+15 V
-15 V
+5 V
DECOUPLING CAPACITORS C49 - C63
SJ (SHT 2-A,2)
POWER DISTRIBUTION
TYPICAL FOR ALL TL081 AND CA3080
CAPACITOR LEGEND
E ELECTROLYTIC
D DISC
T TANTALUM
F FILM
UNUSED GATES
IC 6 7406
IC 28 74LS107
IC | +5 PIN | GND PIN
1 | 14 | 7
2 | 14 | 7
3 | 20 | 10
6 | 14 | 7
10 | 16 | 8
11 | 16 | 8
12 | 14 | 7
13 | 14 | 7
7. LF 351 MAY BE SUBSTITUTED FOR TL081
6. AT J1, J2: → IS MALE PIN, ← IS FEMALE
5. W 16 FOR MANUFACTURING USE ONLY
4. 74LS161 MAY BE SUBSTITUTED FOR 74LS163
3. ALL RESISTORS ARE 1/4 WATT, 5% CARBON
2. ALL RESISTOR VALUES ARE IN OHMS
1. ALL CAPACITOR VALUES ARE IN μf
NOTES: UNLESS OTHERWISE SPECIFIED
DRAWN BY: DAVE SCOTT 1/4/86
PROJECT ENGR:
RELEASE APPROV:
DO NOT SCALE DWG
TOLERANCE: UNLESS OTHERWISE SPECIFIED
PROJECTION:
SCALE:
DATE 1/9/86
ROCK-OLA
DWG TITLE AUDIO BOARD STAR CASTLE
MODEL NO.
DWG SIZE D
DWG NO. 72-10861-02
REV.
CODE IDENT.
SHEET 1 OF 2
A-25

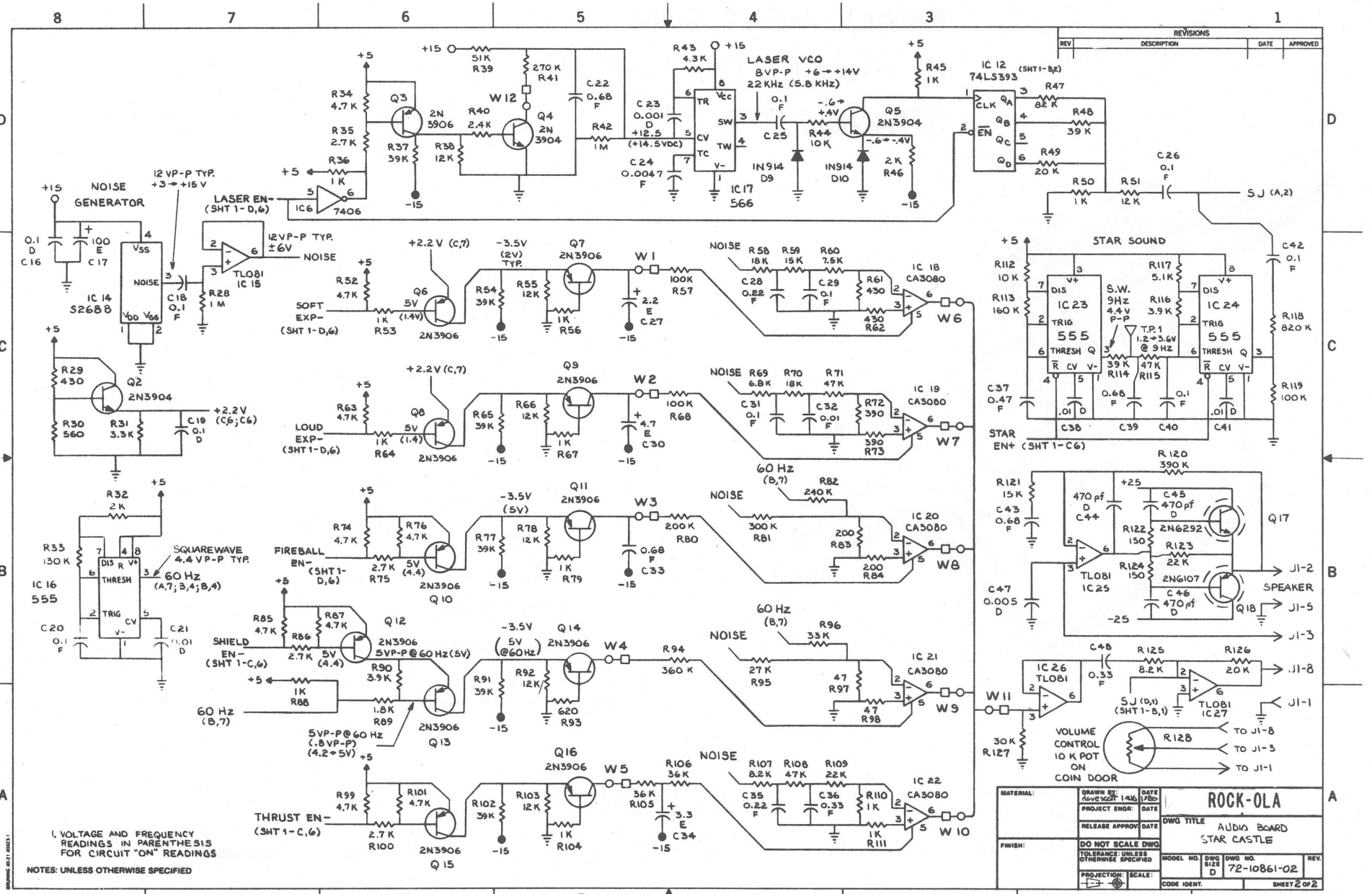
REVISIONS
REV | DESCRIPTION | DATE | APPROVED
NOISE GENERATOR
LASER EN- (SHT 1-D,6)
LASER VCO
8VP-P +6→+14V
22KHz (5.8 KHz)
IC 12 74LS393 (SHT1-B2)
STAR SOUND
SOFT EXP- (SHT 1-D,6)
LOUD EXP- (SHT 1-D,6)
FIREBALL EN- (SHT 1-D,6)
SHIELD EN- (SHT 1-C,6)
THRUST EN- (SHT 1-C,6)
STAR EN+ (SHT 1-C6)
SQUAREWAVE 4.4 VP-P TYP.
60 Hz (A,7; B,4; B,4)
5VP-P @ 60 Hz (.8VP-P) (4.2→5V)
SJ (A,2)
SJ (D,1) (SHT 1-B,1)
SPEAKER
VOLUME CONTROL 10 K POT ON COIN DOOR
TO J1-8
TO J1-3
TO J1-1
W1
W2
W3
W4
W5
W6
W7
W8
W9
W10
W11
1. VOLTAGE AND FREQUENCY READINGS IN PARENTHESIS FOR CIRCUIT "ON" READINGS
NOTES: UNLESS OTHERWISE SPECIFIED
ROCK-OLA
AUDIO BOARD
STAR CASTLE
DWG NO. 72-10861-02
SHEET 2 OF 2

SMALL HEAT SINK
IS PLACED ON TOP OF
TRANSISTOR TAB

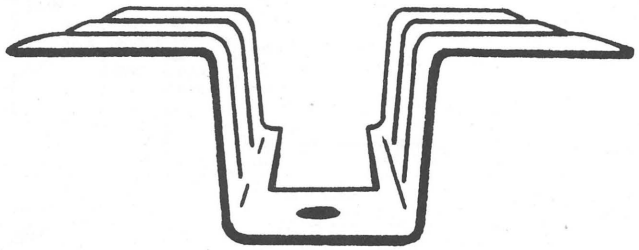

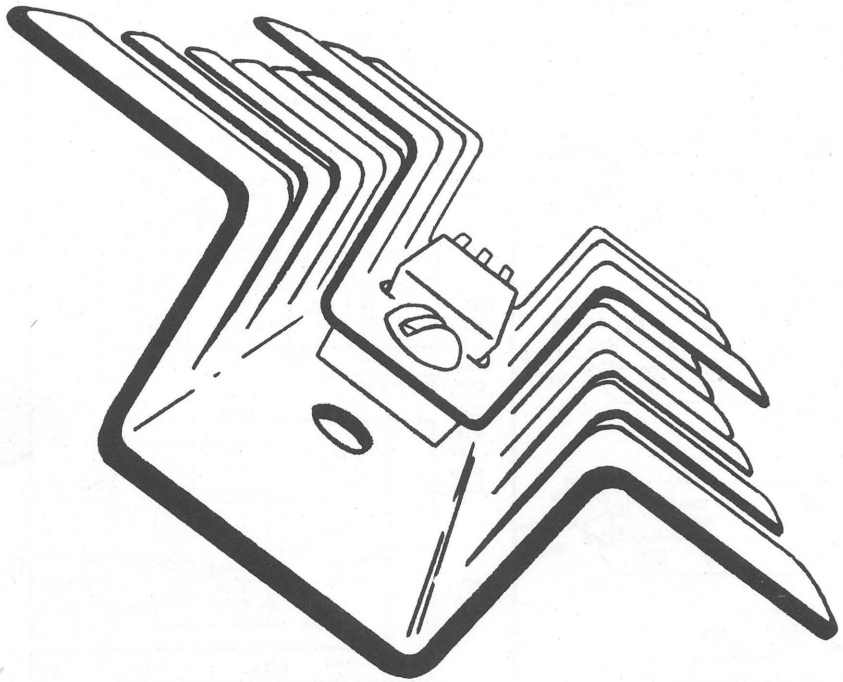

THERMAL
COMPOUND

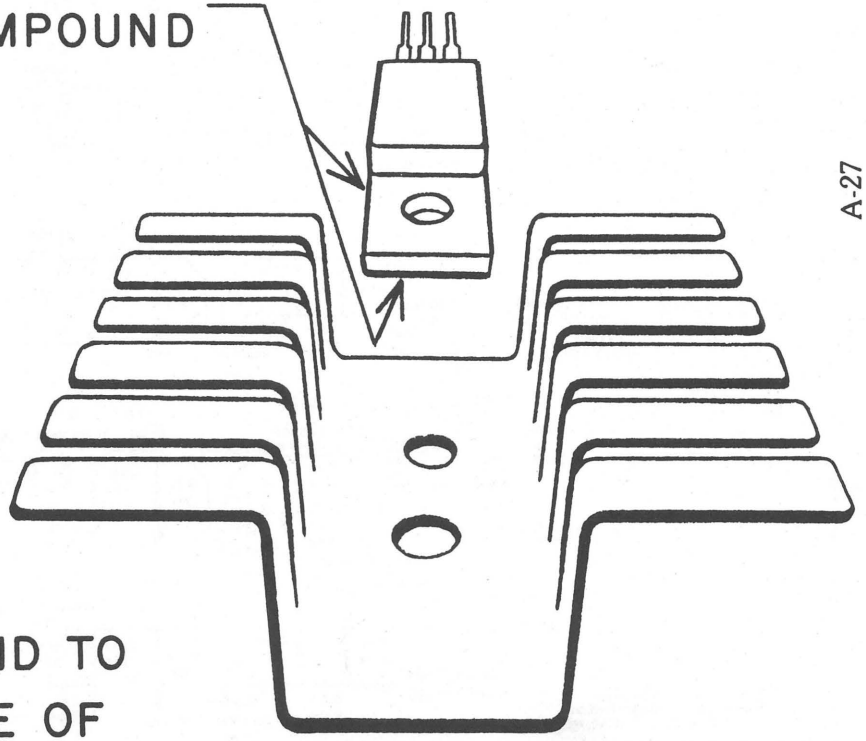

APPLY THERMAL COMPOUND TO
ENTIRE BOTTOM SURFACE OF
TRANSISTOR AND TOP OF TAB

REVISIONS			
REV	DESCRIPTION	DATE	APPROVED

Q6-2N3906
Q7-2N3906
Q8-2N3906
Q9-2N3906
Q10-2N3906
Q11-2N3906
Q15-2N3906
Q16-2N3906
Q12-2N3906
Q13-2N3906
Q14-2N3906

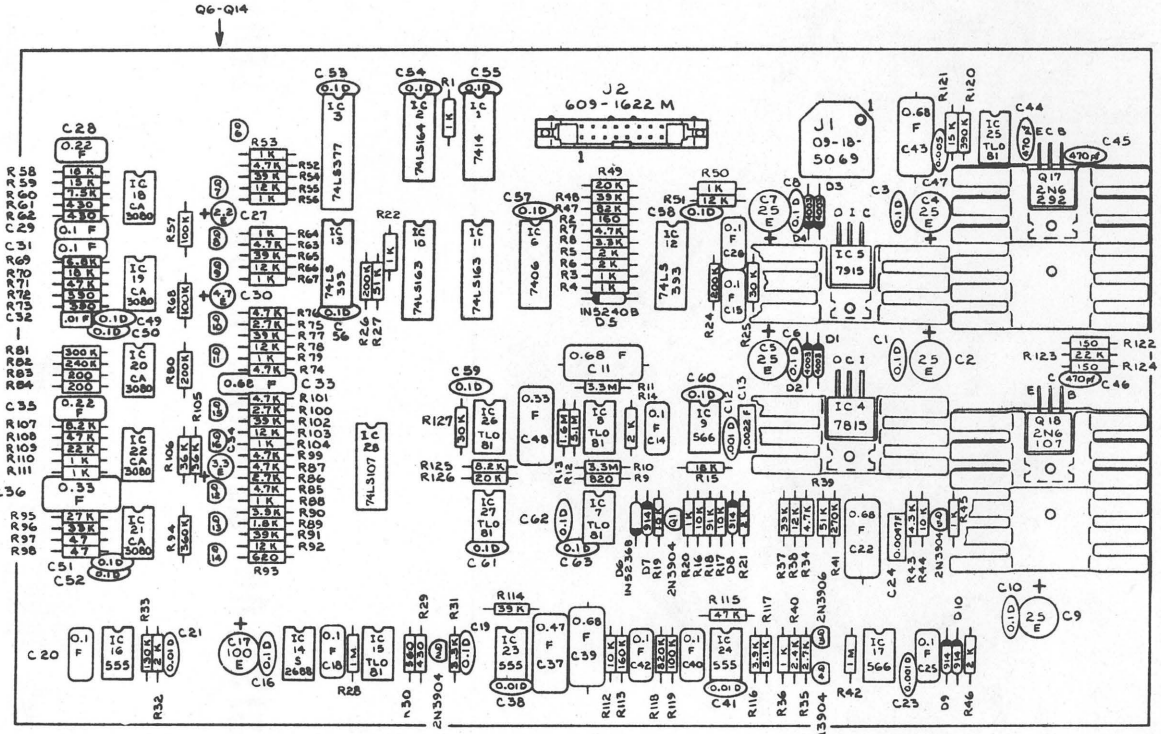

CAPACITOR LEGEND

E ELECTROLYTIC
F FILM
D DISC

ALL CAPACITOR VALUES ARE IN μf, 50 V
ALL RESISTOR VALUES ARE IN OHMS, ¼ W, 5% CARBON
NOTES: UNLESS OTHERWISE SPECIFIED

20 AUGUST 1980

MATERIAL:	DRAWN BY: dave scott	DATE	ROCK-OLA
	PROJECT ENGR:	DATE	DWG TITLE: STAR CASTLE AUDIO
	RELEASE APPROV:	DATE	
FINISH:	DO NOT SCALE DWG.		MODEL NO. / DWG SIZE D / DWG NO. 72-10861-01 / REV. A
	TOLERANCE: UNLESS OTHERWISE SPECIFIED		
	PROJECTION:	SCALE: 2:1	CODE IDENT. / SHEET 1 OF 1

THE HOME OF QUALITY BUILT PRODUCTS FOR GREATER PROFITS

The Rock-Ola factory in Chicago is the largest factory of its kind in the world devoted to the production of Coin Operated Equipment. It consists of a ground area of three and one-half city blocks with 23 buildings and a floor area of more than one-half million square feet.

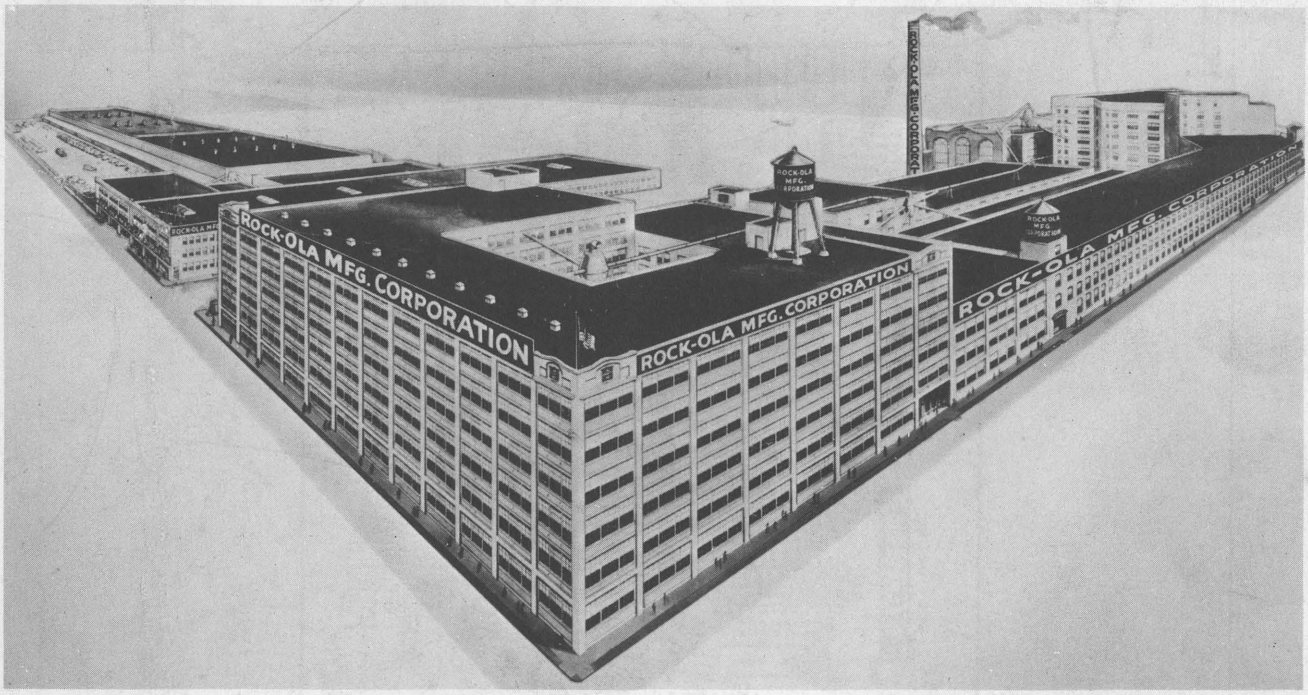

ALWAYS INSIST ON GENUINE ROCK-OLA SERVICE PARTS

ROCK-OLA® *Manufacturing Corporation*

800 N. KEDZIE AVENUE, CHICAGO, ILLINOIS 60651

TELEPHONE: AREA CODE 312 638-7600